## ⚠ Safety Precautions

- Important Notes on exporting this product or equipment containing this product;
  If the end-user or application of this product is related to military affairs or weapons, its export may be controlled by “Foreign Exchange and Foreign Trade Control Law” of Japan where export license will be required before product can be exported from Japan.
- This product is designed and manufactured for use in General Purpose Industrial Equipment and it is not intended to be used in equipment or system that may cause personal injury or death.
- All servicing such as installation, wiring, operation, maintenance and etc., should be performed by qualified personnel only.
- Tighten mounting screws with an adequate torque by taking into consideration strength of the screws and the characteristics of material to which the product will be mounted. Over tightening can damage the screw and/or material; under tightening can result in loosening.
  *Example: apply 2.7 N·m – 3.3 N·m torque when tightening steel screw (M5) to steel surface.
- Install safety equipment to prevent serious accidents or loss that is expected in case of failure of this product.
- Consult us before using this product under such special conditions and environments as nuclear energy control, aerospace, transportation, medical equipment, various safety equipments or equipments which require a lesser air contamination.
- We have been making the best effort to ensure the highest quality of our products, however, some applications with exceptionally large external noise disturbance and static electricity, or failure in input power, wiring and components may result in unexpected action. It is highly recommended that you make a fail-safe design and secure the safety in the operative range.
- If the motor shaft is not electrically grounded, it may cause an electrolytic corrosion to the bearing, depending on the condition of the machine and its mounting environment, and may result in the bearing noise. Checking and verification by customer is required.
- Failure of this product depending on its content may generate smoke of about one cigarette. Take this into consideration when the application of the machine is clean room related.
- Please be careful when using the product in an environment with high concentrations of sulfur or sulfuric gases, as sulfuration can lead to disconnection from the chip resistor or a poor contact connection.
- Do not input a supply voltage which significantly exceeds the rated range to the power supply of this product. Failure to heed this caution may lead to damage of the internal parts, causing smoke and/or fire and other troubles.
- The user is responsible for matching between machine and components in terms of configuration, dimensions, life expectancy, characteristics, when installing the machine or changing specification of the machine. The user is also responsible for complying with applicable laws and regulations.
- Manufacturer’s warranty will be invalid if the product has been used outside its stated specifications.
- Component parts are subject to minor change to improve performance.
- Read and observe the instruction manual to ensure correct use of the product.

| | |
|---|---|
| **Repair** | Consult to the dealer from whom you have purchased this product for details of repair work.<br>When the product is incorporated to the machine you have purchased, consult to the machine manufacturer or its dealer. |
| **URL** | Electric data of this product (Instruction Manual, CAD data) can be download from the following web site;<br>http://industrial.panasonic.com/ww/products/motors-compressors/fa-motors |

Contact to :

ISO 9001 — **ISO9001 Certificate division**

ISO 14001 — **ISO14001 Certificate division**


Panasonic Corporation,
Automotive & Industrial Systems Company,
Smart Factory Solutions Business Division,
Motor Business Unit

1-1 Morofuku 7-chome, Daito, Osaka 574-0044, Japan
Tel : +81-72-871-1212
Fax: +81-72-870-3151


**The contents of this catalog apply to the products as of April 2015.**

- This product is for industrial equipment. Don't use this product at general household.
- Printed colors may be slightly different from the actual products.
- Specifications and design of the products are subject to change without notice for the product improvement.

<15.04Ⓢ>

Panasonic

# Panasonic

AC Servo
MINAS A5Ⅱ／A5 series
MINAS E series

2015/4
Catalog

AC Servo <MINAS A5Ⅱ／A5 series, E series>

# MINAS A5 Family

2015 / 4

**This product is for industrial equipment. Don't use this product at general household.**

# Servo motor that brings out potential of the machine. MINAS A5 Family

Two-degree-of-freedom control system

## All-in-one type

### A5II series

Rated output: **50 W to 15.0 kW**

- 20 bit incremental encoder, 17 bit absolute/ incremental encoder
- All-in-one: Speed, Position, Torque*1, Full-closed*1 control type

*1 Not applicable to two-degree-of-freedom control system.

## All-in-one type

### A5 series

Rated output: **50 W to 15.0 kW**

- 20 bit incremental encoder, 17 bit absolute/ incremental encoder
- All-in-one: Speed, Position, Torque, Full-closed control type

Two-degree-of-freedom control system

## Position control type

### A5IIE series

Rated output: **50 W to 5.0 kW**

- 20 bit incremental encoder
- Position control (pulse train commands)

## Position control type

### A5E series

Rated output: **50 W to 5.0 kW**

- 20 bit incremental encoder
- Position control (pulse train commands)

**Slim design and position control type**

### E series

Rated output: **50 W to 400 W**

- Ultra-small design and pulse train command type only
- Real-time auto gain tuning
- DIN-rail mountable (using mounting Kit)



## High-speed communication "Realtime Express" support model

### Ultra high-speed Network type

A5IIN series Special Order Product

Rated output:
**50 W to 15.0 kW**

- Synchronized motion and precise CP control up to 32 axes with 100 Mbps communication
- Standard Ethernet cable*2 using
- Two-degree-of-freedom control system

### Linear motor and DD motor control type

A5IINL series Special Order Product

Capacity of applying Linear motor:
**Compatible with 15.0 kW rotary AC servo motor**

- Position, Speed and Thrust control
- Automatic setup function & Automatic magnetic pole detection function
- Two-degree-of-freedom control system

### DC 24 V type

A5IIMN series Special Order Product

Rated output:
**10 W, 20 W, 30 W**

- Synchronized motion and precise CP control up to 32 axes with 100 Mbps communication
- Standard Ethernet cable*2 using
- Two-degree-of-freedom control system

### Linear motor control, DC 24 V type

A5IIMNL series Special Order Product

Capacity of applying Linear motor:
**Compatible with 30 W rotary AC servo motor**

- Position, Speed and Thrust control
- Automatic setup function & Automatic magnetic pole detection function
- Two-degree-of-freedom control system

### Linear motor and DD motor control type

A5L series Special Order Product

Capacity of applying Linear motor:
**Compatible with 15.0 kW rotary AC servo motor**

- Position, Speed, Thrust control
- Drastically reduced setup time by automatic setup
- Automatic magnetic pole detection function will detect the magnetic pole position of the linear motor.

### EtherCAT communication driver type

A5B series Special Order Product

Rated output:
**50 W to 15.0 kW**

- Supports PC-based controller
- Passed Official EtherCAT Conformance Test
- Standard Ethernet cable*2 using
- Two-degree-of-freedom control system

### General-purpose RS485 communication AE-LINK support type

A5A series Special Order Product

Rated output:
**50 W to 5.0 kW**

- Positioning is possible by built-in NC function
- Can connect up to 31 axes
- Standard Ethernet cable*2 using
- Two-degree-of-freedom control system

• AE-LINK is a registered trade mark of Asahi Engineering.

Special Order Product : For details, see the website or request for information. *2 Shielded twisted pair cable (CAT5e or higher)

Contents

**A5II, A5IIE, A5, A5E series**


**A5II Series Features** ····· 3
**A5 Family Features** ····· 5
**Motor Line-up** ····· 15
**Model Designation** ····· 16
**Overall Wiring** ····· 17
**Driver and List of Applicable Peripheral Equipments** ····· 19
**Table of Part Numbers and Options** ····· 21

Driver
- **Driver Specifications**
  - A5II, A5 series (All-in-one type) ····· 29
  - A5IIE, A5E series (Position control type) ····· 31
- **Wiring Diagram**
  - Wiring to the Connector XA, XB, XC, XD and terminal block. ····· 33
- **Safety Function**
  - Wiring to the Connector X3 ····· 36
- **Control Circuit Diagram**
  - Wiring to the Connector X4 ····· 37
  - Wiring to the Connector X5 ····· 39
  - Wiring to the Connector X6 ····· 40
  - Dimensions of Driver ····· 42

Motor
- Motor Specifications ····· 49
- Dimensions (IP67 motor) ····· 137
- Motors with Gear Reducer ····· 141
- **Special Order Product** ····· 151
  - Model Designation ····· 152
  - Table of Part Numbers and Options ····· 153
  - Motor Specifications ····· 155
- Motor Specifications, Description ····· 182

Options
- Cable part No. Designation ····· 185
- Specifications of Motor connector ····· 186
- Encoder Cable ····· 188
- Motor Cable ····· 191
- Brake Cable ····· 196
- Interface Cable ····· 197
- Connector Kit ····· 198
- Battery for Absolute Encoder ····· 207
- Mounting Bracket ····· 208
- Reactor ····· 209
- External Regenerative Resister ····· 210
- Surge Absorber for Motor Brake ····· 212
- List of Peripheral Equipments ····· 213

**E series** ····· 215

**Information** ····· 246
- Index ····· 288
- Sales Office ····· 306

# Quicker, Wiser and Friendlier A5Ⅱ series



## Two-degree-of-freedom control system All-in-one type

• Full-closed control and torque control are not applicable to 2DOF control system.

A5Ⅱ series

Ball screw settling time **0 ms**

Belt device settling time **4 ms**

• The above is a measure based on our test environment.

## Two-degree-of-freedom control system Only for position control type

A5ⅡE series

## Realizes quick and accurate movement. Fast response & High-precision positioning

### Adopted New Algorithm "Two-degree-of-freedom control" (2DOF) to improve productivity and machining accuracy.

In the conventional model, because we could not adjust separately feedforward control and feedback controls, in other words even if we only adjust "Approach" of feedforward, it had connection with "Settling" of feedback control, mutual adjustment was required.

**In 2DOF adopted A5Ⅱ series,** feedforward and feedback controls are adjusted separately, meaning "Approach" reaction to the given command, and the "Settling" can be adjusted separately.

Realized low vibration and reduction of settling time. Realizes tact speed of the electronic component mounting machines, improves the accuracy of surface treatment of metal processing machines, allows for smooth operation and High speed industrial robots.

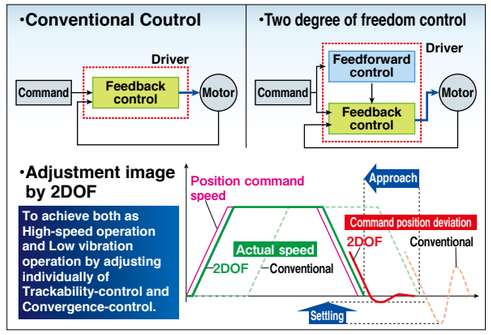


• Full-closed control and torque control are not applicable to 2DOF control system.

• **Waveform of PANATERM**
**(the case of the ball screw: 0 ms / waveform measured settling time)**

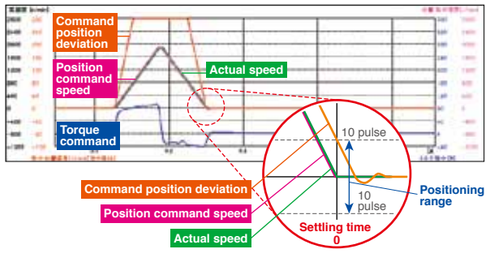


## Easy and quick adjusting time. 5 times faster* than conventional

### Greatly improved "operability", easy-to-use software "PANATERM".

We have upgraded setup support software PANATERM, the convenient tool for parameter setting and monitoring often required during start-up of the machine for adjustment motor and driver. Improved to more easy-understandable screen.

### Equipped with "Fit Gain" function to realize speedy setup.

Newly developed feature "Fit Gain" maximizes the characteristics of A5II series. And adaptive notch filter function can reduce the vibration that occurs when the rigidity of the device is low, you can set and adjust automatically the best variety of gain.

• **Adjustment is completed in only 3 processes**

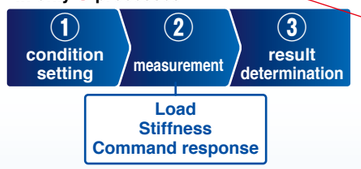


• **Fit gain adjustment window**

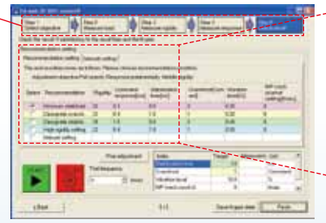

• **Automatically proposes various settings**

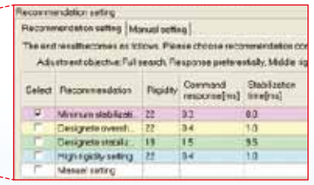

## Realized 2.3 kHz frequency response to improve productivity

### Comparison* 1.15 times faster than conventional

Realized 2.3 kHz response makes possible high-speed operation and improves productivity.

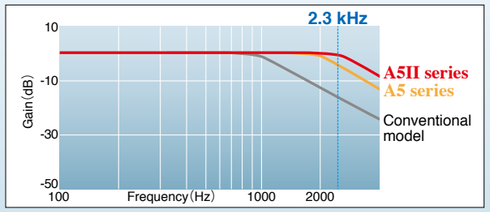


* Comparison with conventional product A5-series.

# 1 Quick

## 2.0 kHz Frequency Response A5 A5E

2.0 kHz

Example application Semiconductor production equipment, packaging, etc.

**Achieves the industry's leading frequency response of 2.0 kHz.**

Operation speed up by new developed LSI and high responsible control. **By the industry's leading speed and positioning response, a highly advanced system can be created. What's more, the shorter response delay will realize an extremely lower vibration.**

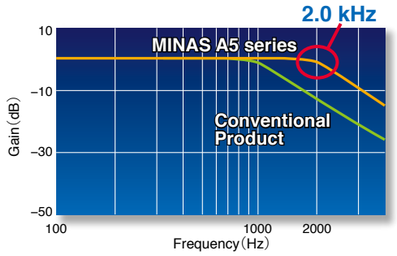


## 20 bits/revolution, 1.04 million pulses (At incremental type) A5II A5 A5IIE A5E

20 bits/rev

Example application Machine tools, textile machinery, etc.

**Ensures smoother operation and reduced vibration at stopping.**
**Ensures accurate positioning in a short time.**

New proprietary signal processing technology achieves 1.04 million pulses with a 20-bit incremental encoder.

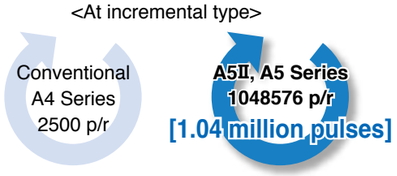


## Low Cogging Torque (Excluding MSMD, MHMD, MDME 11.0 kW. 15.0 kW) A5II A5 A5IIE A5E

Low cogging

Example application Semiconductor production equipment, textile machinery, etc.

**For the industry's most stable speed and lowest cogging**

We've achieved the industry's lowest cogging by minimizing the pulse width by a new design incorporating a 10-pole rotor for the motor and a magnetic field parsing technique. **Positioning and stability are greatly improved by the minimal torque variation. This results to improved speed stability and positioning of motor rotation.**

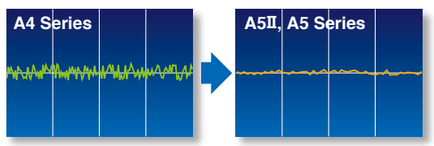


Vibration reduced to only **1/8**

## The Input/Output Pulse 4 Mpps A5II A5 A5IIE A5E

4 Mpps

Example application Semiconductor production equipment, machine tools, etc.

**Accommodates the industry's leading positioning resolution commands (with pulse train commands).**

The command input and feedback output operate at the high speed of 4 Mpps. Accommodates high-resolution and high-speed operation, including standard full closed operation. (Provided with A5II, A5 only. )

# 2 Smart

## Highly Functional Real-time Auto-Gain Tuning A5II A5 A5IIE A5E

Auto tuning

Example application Semiconductor production equipment, food processing machinery, etc.

**High-performance real-time auto-gain tuning featuring simple setup.**

After installation, tuning will be completed automatically after several operations. When the response is adjusted, **simple tuning** is supported with a change of one parameter value. Use of the gain adjustment mode in the setup support software contributes to optimum adjustment. **The built-in auto vibration suppression function reduces equipment damage.** Appropriate modes are provided for various machines such as **vertical axis machines and high friction machines with belts**.

This makes it possible to perform simple optimal adjustments simply by selecting the mode and stiffness.

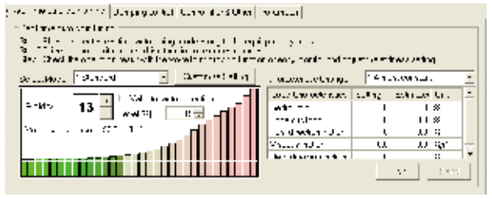

## Manual/Auto Notch Filters A5II A5 A5IIE A5E

Notch filters

Example application Semiconductor production equipment, food processing machinery, etc.

**Equipped with auto-setting notch filters for greater convenience.**

Now there is no need to measure troublesome vibration frequencies. Our notch filters automatically detect vibration and provide simple auto-setting. These notch filters greatly reduce noise and vibration caused by equipment resonance and respond quickly during operation. The A5II, A5 series features an industry-largest total of four notch filters with setup frequencies of 50 Hz to 5000 Hz. This approach enables depth adjustment within this frequency range. (Two of the filters share the auto set-up.)

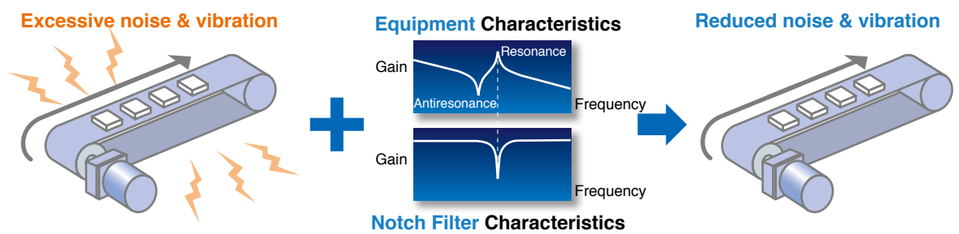


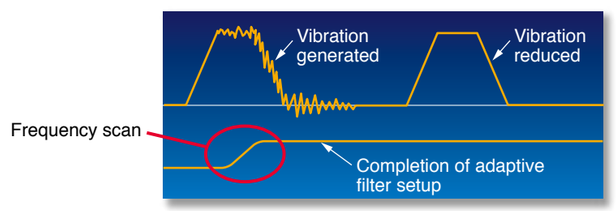

## Manual/Auto Damping Filter

A5II A5 A5IIE A5E

Damping filter

Example application: Chip mounters, food processing machinery, robots, general production machinery, etc.

**Equipped with a damping filter featuring simplified automatic setup.**

The setup software features automatic setup of the damping filter. **This filter removes the natural vibration frequency component from the command input, greatly reducing vibration of the axis when stopping.** The number of filters has been increased to four from the conventional two filters (two for simultaneous use). The adaptive frequency has also been significantly expanded from 1 Hz to 200 Hz.

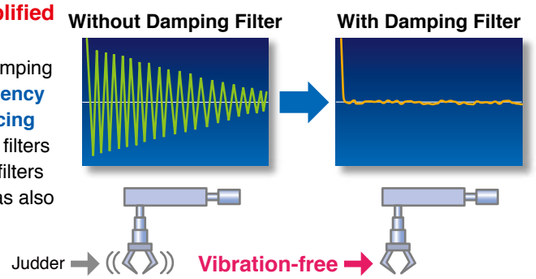


## Motion Simulation

A5II A5 A5IIE A5E

Simulation

Example application: General production machinery, etc.

**Equipped with a simplified machine simulation function.**

The setup software uses frequency response data acquired from the actual machine. In addition, it features a machine simulation function for performing simulated operation. **This allows you to easily confirm the effects of gain and various filters without adjusting the actual equipment.**

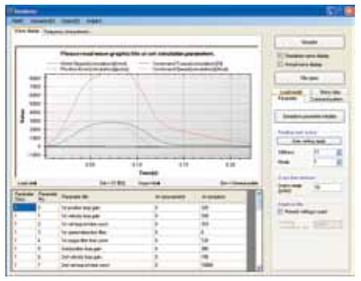

3 Light

## New Structure/ Innovative Core/ Innovative Encoder

A5II A5 A5IIE A5E

New structure

Innovative core

Innovative encoder

Example application: Robots, chip mounters, general production machinery, etc.

**Featuring significantly reduced weight and a more compact motor**

We've developed new designs for both compact motors and large motors. The new design used for the core has succeeded in compact. **The addition of an innovative compact encoder has contributed to a 10 % to 25 % (1 kg to 6 kg) reduction in motor weight in the 1 kW and larger class when compared with conventional motors.**

[Examples for MSM or MDM]

| Series | A4 | A5II A5 | Weight Reduction |
|---|---|---|---|
| MSM 1 kW | 4.5 kg | 3.5 kg | ▲1 kg |
| MSM 2 kW | 6.5 kg | 5.3 kg | ▲1.2 kg |
| MDM 1 kW | 6.8 kg | 5.2 kg | ▲1.6 kg |
| MDM 2 kW | 10.6 kg | 8.0 kg | ▲2.6 kg |



4 Safe

## Complies with European Safety Standards.

A5II A5

Safe torque off

Example application: Semiconductor and LCD production equipment, etc.

**Compliance with EU safety standards.**

Features non-software-based independent redundant circuitry for motor power isolation. independent redundant circuitry for motor power isolation. This obviates the need for magnetic contactors to isolate the required motor in order to accommodate low-voltage machinery commands.
(The final safety compliance must be applied as machine.)

## Low noise

A5II A5 A5IIE A5E

Low noise

Example application: Semiconductor and LCD production equipment, etc. general production machinery for export to the European market

**Complies with the European EMC Directive**

By incorporating the latest circuit technology, A5II, A5 series achieves a further noise reduction of 3 dB compared with the conventional A4 series, which also features noise suppression. (The A4 series also conforms to the EMC Directive.)

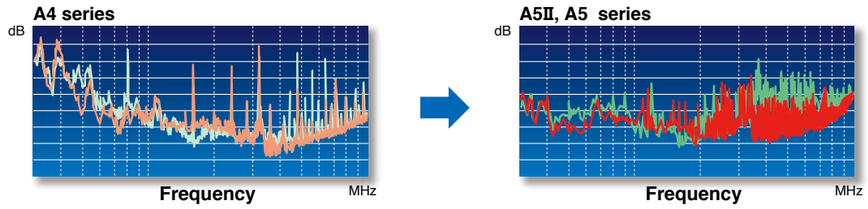


## IP67 Enclosure Rating (Products are build to order items.)

A5II A5 A5IIE A5E

IP67

Example application: Machine tools, robots, printing machines, etc.

**IP67 enclosure rating for increased environmental resistance**

Our improved motor seals and direct-mount connectors in the motor power supply and encoder input-output areas contribute to this unit's IP67 enclosure rating.

Adoption of direct-mount connector

**IP67**
- Protection against water
  - Protection against temporary immersion in water
- Protection against dust
  - Protected against dust penetration when in full contact

- Motors of MSMD and MHMD series and 0.9 kW or higher standard stock items have IP65 rating.
- Motors of IP67 have smaller encoder connector that requires cable compatible with IP67 motor.

* IP67 motor is build to order items.

5
Easy

## PANATERM Set-up Support Software

A5II A5 A5IIE A5E

### The PANATERM Set-up Support Software, with many added features.

The PANATERM assists users in setting parameters, monitoring control conditions, setup support, and analyzing mechanical operation data on the PC screen, when installed in a commercially available personal computer, and connected to the MINAS A5 Family through the USB interface.

**Localized in 4 languages**

Choose either **English, Japanese, Chinese, or Korean**-language display.

### Setup Wizard

This wizard supports fundamental settings in each control mode step by step, includeing reading of default setting.
In on-line condition, input data related to each step can be monitored in real time.

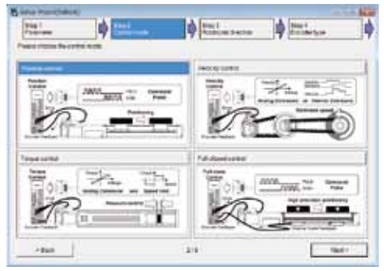

### The fit gain function for setting two-degree-of-freedom control.

1) Select the adjustment method
2) Load measurement
3) Adjust gain to meet your needs by confirming results. (for A5II, A5IIE)

### Fit gain

This function automatically searches the best suitable stiffness setting and mode and adjusts the gain once the target in-position range and setting time are set.

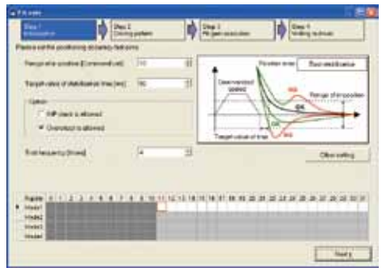

### Service Life Prediction

The service life prediction function considers the internal temperature for main components such as the fan and condenser. If the rated value is exceeded, an alarm is displayed. **This approach prevents unexpected suspension of operation and allows for planning of systemized maintenance.**

Note: The life span prediction value should be considered as a guide only.



### Encoder Temperature Monitor

The Encoder Temperature Monitor is a new function capable of **real-time measurement of the interior temperature of the encoder, something that has been difficult to achieve in the past**. It is valuable for monitoring the motor and can be used as a diagnostic in the event of a malfunction (provided with 20-bit encoder only).

### Other New Function

The software offers a wide range of convenient features including motor and driver data such as load factor, voltage, and driver temperature. Moreover, the logging function records the interface history. As well, a non-rotating contributing factor display function.

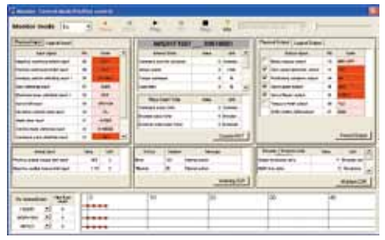

### Frequency characteristics measurement function

Can check frequency response characteristics of the mechanism and motor. Since resonance frequency of the mechanism is measurable, it is effective for start-up time reduction.

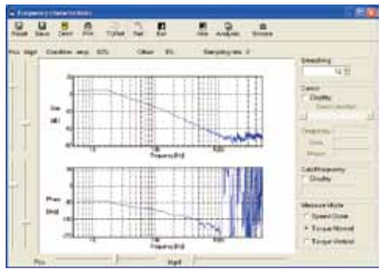

### Trial run

This function supports positioning with the Z-phase search and software limit.

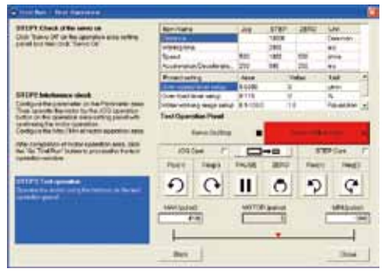

### Added New screen for gain adjustment, equipped with stiffness oscillation auto-reduction function

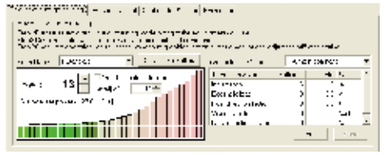

### Significant increase of measuring objects Multi-functional waveform graphic

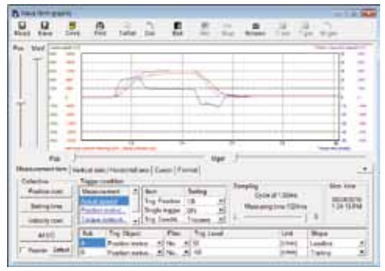

**<CAUTION>**
This software is applicable only to A5II, A5, A5IIE, A5E series.
To apply this software to conventional product (A, AIII, E or A4 series), consult our distributors.

| Hardware configuration | | |
|---|---|---|
| Personal computer | CPU | Pentium III 512MHz or more |
| | Memory | 256MB or more (512MB recommended) |
| | Hard disk capacity | Vacancy of 512MB or more recommended |
| | OS | Windows® XP SP3 (32-bit Ver.), Windows® VISTA SP1 (32-bit Ver.)<br>Windows® 7 (32-bit Ver., 64-bit Ver.)<br>[English, Japanese, Chinese or Korean version] |
| | Serial communication port | USB port |
| Display | Resolution | 1024 × 768pix or more (desirably 1024 × 768) |
| | Number of colors | 24bit colors (TrueColor) or more |

**Please download from our web site and use after install to the PC.**
**http://industrial.panasonic.com/ww/products/motors-compressors/fa-motors**

## Other Functions

### Command Control Mode A5II A5

- Command control mode is available for Position, Speed (including eight internal velocities) and Torque.
- Using parameter settings, you can set up one optional command control mode or two command control modes by switching.
- According to suitable application utility, proper optional command control mode can be chosen.

### Full-closed Control A5II A5

AB-phase linear scale (for general all-purpose products) or serial scale (for products with Panasonic's exclusive format) scales can be used (P.14).

### SEMI F47 A5II A5 A5IIE A5E

- Includes a function in compliance with the SEMI F47 standard for voltage sag immunity under no load or light load.
- Ideal for the semiconductor and LCD industries.
  Notes:
  1) Excluding the single-phase 100-V type.
  2) Please verify the actual compliance with your machine checking the F47 standard for voltage sag immunity.

### Inrush Current Preventive Function A5II A5 A5IIE A5E

- This driver is equipped with a rush current preventive resistor to prevent the circuit breaker from shutting off the power supply as a result of inrush current occurring at power-on.

### Regenerative Energy Discharge A5II A5 A5IIE A5E

- A regenerative resistor is used to discharge regenerative energy, which is the energy generated when stopping a load with a large moment of inertia or when using this unit in vertical operation. This energy is returned to the driver from the motor.
- Frame A, B, G and frame H model drivers do not contain a regenerative resistor. Optional regenerative resisters are recommended.
- Frame C to frame F model drivers contain one regenerative resistor; however, adding an optional regenerative resistor provides additional regeneration capability.

### 6000-rpm capability A5II A5 A5IIE A5E
(build to order item)

The MSME motor (under 750 W) can accommodate a maximum speed of 6000 r/min.

[Comparison of new and conventional 200 W]

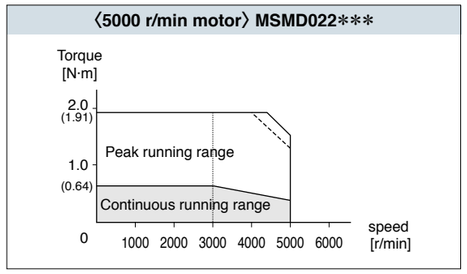


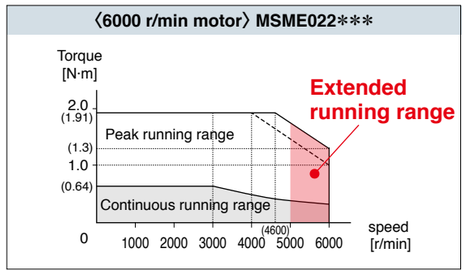


- **Gear head**
  Gear heads for 6000 r/min and 5000 r/min motors are available.Set 5000 r/min gear head only to 5000 r/min motor, and set 6000 r/min gear head only to 6000 r/min motor.
  When customers prepare a gear head, use it as follows:
  MSME → 6000 r/min
  MSMD, MHMD → 5000 r/min

### Dynamic Braking A5II A5 A5IIE A5E

- With parameter settings, you can select dynamic braking, which shorts servomotor windings U, V and W at Servo-OFF, during positive direction/ negative direction, and during power shutdown and tripping of the circuit breaker for over travel inhibition.
  * The dynamic brake circuit of H-frame is external.
- The desired action sequence can be set up to accommodate your machine requirements.

### Parameter Initialization A5II A5 A5IIE A5E

Using the front panel or by connecting a PC, you can restore the parameters to the factory settings.

### Disturbance Observer A5II A5 A5IIE A5E

By using a disturbance observer to add an estimated disturbance torque value to the torque canceling command, this function diminishes the impact of the disturbance torque, reduces vibration, and offsets any speed decline.

Disturbance observer function not in effect

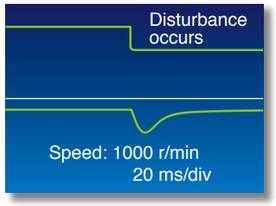


Disturbance observer function in effect

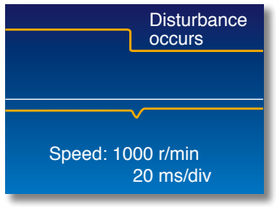


### Torque Feed Forward A5II A5 A5IIE A5E

The Torque Feed Forward function performs a comparison with feedback and calculates the amount of torque to add to the necessary torque command in the command for actuation.

### Friction Torque Compensation A5II A5 A5IIE A5E

This function reduces the effect of machine-related friction and improves responsiveness. Two kinds of friction compensation can be set up: unbalanced load compensation, which compensates with a constant operational offset torque; and kinetic friction, which changes direction in response to the direction of movement.

### 3-Step Gain A5II A5 A5IIE A5E

A 3-step gain switch is available in addition to the normal gain switch.
This chooses appropriate gain tunings at both stopping and running.
The 3-step gain switch gives you choices of 3 different tunings for normal running, stopping for faster positioning and at stopping.
The right gaining tunings achieve lower vibration and quicker positioning time of your application.

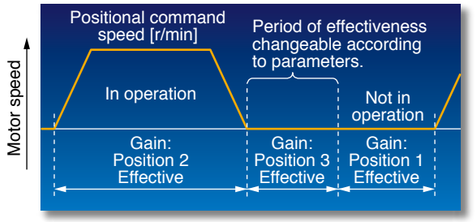


### Inertia Ratio Conversion A5II A5 A5IIE A5E

You can adjust right inertia ratio by Inertia Ratio Conversion input(J-SEL).
When you have significant load inertia changes, it can adjust unbalanced speed and position gain turning combination.
It ends up quicker response of your system.

### Input/Output Signal Assignment A5II A5 A5IIE A5E

**You can use the parameters to arbitrarily allocate the universal 10 inputs and 6 outputs.** (Inputs can be selected as either A contacts or B contacts). The Panaterm setup software provides an exclusive screen for a more simplified setup.

### Torque Limiter Switching A5II A5 A5IIE A5E

You can use the I/Os to set up torque limits. These can be used for applications such as simplified pressure, tension control, and sensor-less homing.

## Applicable international safety standards

A5Ⅱ A5 A5ⅡE A5E

(A5Ⅱ, A5 series) (A5ⅡE, A5E series)

| | | Driver | Motor |
|---|---|---|---|
| EC Directives | EMC Directives | EN55011<br>EN61000-6-2<br>IEC61800-3 | – |
| | Low-Voltage Directives | EN61800-5-1 | EN60034-1<br>EN60034-5 |
| | Machinery Directives<br>Functional safety *1 | ISO13849-1(PL d) (Cat. 3)<br>EN61508(SIL2)<br>EN62061(SILCL 2)<br>EN61800-5-2(STO)<br>IEC61326-3-1 | – |
| UL Standards | | UL508C (E164620) | UL1004-1, UL1004-6<br>(E327868) |
| CSA Standards | | C22.2 No.14 | C22.2 No.100 |
| Radio Waves Act (South Korea) (KC) *2 | | KN11<br>KN61000-4-2, 3, 4, 5, 6, 8, 11 | – |

IEC : International Electrotechnical Commission
EN : Europaischen Normen
EMC : Electromagnetic Compatibility
UL : Underwriters Laboratories
CSA : Canadian Standards Association

Pursuant to the directive 2004/108/EC, article 9(2)
Panasonic Testing Centre
Panasonic Service Europe, a division of
Panasonic Marketing Europe GmbH
Winsbergring 15, 22525 Hamburg, F.R. Germany

・When export this product, follow statutory provisions of the destination country.

*1 A5ⅡE and A5E series doesn't correspond to the functional safety standard.

*2 Information related to the Korea Radio Law
This servo driver is a Class A commercial broadcasting radio wave generator not designed for home use.
The user and dealer should be aware of this fact.

A 급 기기 (업무용 방송통신기자재)
이 기기는 업무용(A 급) 전자파적합기기로서 판매자
또는 사용자는 이 점을 주의하시기 바라며, 가정외의
지역에서 사용하는 것을 목적으로 합니다.

( 대상기종 : Servo Driver )

This product is not an object of China Compulsory Certification (CCC).



## Applicable External Scales

A5Ⅱ A5

| Applicable External Scale | Manufacturer | Model No. | Resolution [μs] | Maximum Speed (m/s) *3 |
|---|---|---|---|---|
| Parallel Type (AB-phase) | General | – | Maximum speed after 4 × multiplication: 4 Mpps | |
| Serial Type (Incremental) | Magnescale Co., Ltd. | SR75 | 0.01 to 1 | 3.3 |
| | | SR85 | 0.01 to 1 | 3.3 |
| | | SL700-PL101RP/RHP | 0.1 | 10 |
| | | SL710-PL101RP/RHP | 0.1 | 10 |
| | | BF1 | 0.001/0.01 | 0.4/1.8 |
| | Nidec Sankyo Corporation | PSLH | 0.1 | 6 |
| Serial Type (Absolute) | DR. JOHANNES HEIDENHAIN GmbH | LIC2197P/LIC2199P | 0.05/0.1 | 10 |
| | | LIC4193P/LIC4195P<br>LIC4197P/LIC4199P | 0.001<br>/0.005<br>/0.01 | 10 |
| | Fagor Automation S.Coop. | SVAP | 0.05 | 2.5 |
| | | SAP | 0.05 | 2.5 |
| | | GAP | 0.05 | 2.5 |
| | | LAP | 0.1 | 2 |
| | Magnescale Co., Ltd. | SR77 | 0.01 to 1 | 3.3 |
| | | SR87 | 0.01 to 1 | 3.3 |
| | Mitutoyo Corporation | AT573A | 0.05 | 2.5 |
| | | ST778A(L) | 0.1 | 5 |
| | Renishaw plc | RESOLUTE | 0.001 | 0.4 |
| | | | 0.05 | 20 |
| | | | 0.1 | 40 |

*3 The maximum speed is a characteristic of the driver. It is limited by the configuration of the machine and the system.

## Motor Line-up

| | Motor | | Voltage | Rated output (kW) | Rated rotational speed (Max. speed) (r/min) | Rotary encoder: 20-bit incremental | Rotary encoder: 17-bit absolute | Enclosure (*1) | Features | Applications |
|---|---|---|---|---|---|---|---|---|---|---|
| Low inertia | MSMD | | 100 V<br>200 V | 0.05 0.1<br>0.2 0.4 | 3000<br>(5000) | ○ | ○ | IP65 | • Leadwire type<br>• Small capacity<br>• Suitable for high speed application<br>• Suitable for all applications | • Bonder<br>• Semiconductor production equipment<br>• Packing machines<br>etc |
| | | | 200 V | 0.75 | 3000<br>(4500) | | | | | |
| | MSME | | 100 V<br>200 V | 0.05 0.1<br>0.2 0.4 | 3000<br>(6000) | ○ | ○ | IP67 | • Small capacity<br>• Suitable for high speed application<br>• Suitable for all applications | |
| | | | 200 V | 0.75 | | | | | | |
| | | | 400 V | 0.75 | 3000<br>(5000) | ○ | ○ | IP65(*2) | • Middle capacity<br>• Suitable for the machines directly coupled with ball screw and high stiffness and high repetitive application | • SMT machines<br>• Food machines<br>• LCD production equipment<br>etc |
| | | | 200 V<br>400 V | 1.0 1.5<br>2.0 3.0 | | | | | | |
| | | | | 4.0 5.0 | 3000<br>(4500) | | | | | |
| Middle inertia | MDME | | 400 V | 0.4 0.6 | 2000<br>(3000) | ○ | ○ | IP65(*2) | • Middle capacity<br>• Suitable for low stiffness machines with belt driven | • Conveyors<br>• Robots<br>• Machine tool<br>etc |
| | | | 200 V<br>400 V | 1.0 1.5<br>2.0 3.0<br>4.0 5.0 | | | | | | |
| | | | | 7.5 (*3) | 1500<br>(3000) | | | | | |
| | | | | 11.0 (*3)<br>15.0 (*3) | 1500<br>(2000) | | | | | |
| | MFME<br>(Flat type)<br>(*3) | | 200 V<br>400 V | 1.5<br>2.5<br>4.5 | 2000<br>(3000) | ○ | ○ | IP67 | • Middle capacity<br>• Flat type and suitable for machines with space limitation | • Robots<br>• Food machines<br>etc |
| | MGME<br>(Low speed/High torque type) | | 200 V<br>400 V | 0.9 2.0<br>3.0<br>4.5 (*3)<br>6.0 (*3) | 1000<br>(2000) | ○ | ○ | IP65(*2) | • Middle capacity<br>• Suitable for low speed and high torque application | • Conveyors<br>• Robots<br>• Textile machines<br>etc |
| High inertia | MHMD | | 100 V<br>200 V | 0.2<br>0.4 | 3000<br>(5000) | ○ | ○ | IP65 | • Leadwire type<br>• Small capacity<br>• Suitable for low stiffness machines with belt driven | • Conveyors<br>• Robots<br>etc |
| | | | 200 V | 0.75 | 3000<br>(4500) | | | | | |
| | MHME | | 200 V<br>400 V | 1.0 1.5<br>2.0 3.0<br>4.0 5.0 | 2000<br>(3000) | ○ | ○ | IP65(*2) | • Middle capacity<br>• Suitable for low stiffness machines with belt driven, and large load moment of inertia | • Conveyors<br>• Robots<br>• LCD manufacturing equipment<br>etc |
| | | | | 7.5 (*3) | 1500<br>(3000) | | | | | |

(*1) Except for output shaft, and connector. (*2) IP67 motor is also available. (*3) Only IP67 motor is avilable.

*** See the P.21 to P.28, driver and motor combination.**





* For combination of elements of model number, refer to Index.

## Servo Motor

**M S M E 5 A Z G 1 S ∗ ∗**

**Special specifications**

| Symbol | Type |
|---|---|
| MSMD | Low inertia (50 W to 750 W) |
| MSME | Low inertia (50 W to 5.0 kW) |
| MDME | Middle inertia (400 W to 15.0 kW) |
| MFME | Middle inertia (1.5 kW to 4.5 kW) |
| MGME | Middle inertia (0.9 kW to 6.0 kW) |
| MHMD | High inertia (200 W to 750 W) |
| MHME | High inertia (1.0 kW to 7.5 kW) |

**Motor rated output**

| Symbol | Rated output | Symbol | Rated output |
|---|---|---|---|
| 5A | 50 W | 25 | 2.5 kW |
| 01 | 100 W | 30 | 3.0 kW |
| 02 | 200 W | 40 | 4.0 kW |
| 04 | 400 W | 45 | 4.5 kW |
| 06 | 600 W | 50 | 5.0 kW |
| 08 | 750 W | 60 | 6.0 kW |
| 09 | 0.9 kW | 75 | 7.5 kW |
| 10 | 1.0 kW | C1 | 11.0 kW |
| 15 | 1.5 kW | C5 | 15.0 kW |
| 20 | 2.0 kW | | |

**Voltage specifications**

| Symbol | Specifications |
|---|---|
| 1 | 100 V |
| 2 | 200 V |
| 4 | 400 V |
| Z | 100 V/200 V common (50 W only) |

**Rotary encoder specifications**

| Symbol | Format | Pulse counts | Resolution | Wires |
|---|---|---|---|---|
| G | Incremental | 20-bit | 1048576 | 5 |
| S | Absolute | 17-bit | 131072 | 7 |

* S: can be used in incremental.

**Motor specifications**

**MSME(50 W to 750 W [200 V]), MSMD, MHMD**

| Symbol | Shaft: Round | Shaft: D-cut | Shaft: Key-way, center tap | Holding brake: without | Holding brake: with | Oil seal: without | Oil seal: with |
|---|---|---|---|---|---|---|---|
| A | ● | | | ● | | ● | |
| B | ● | | | | ● | ● | |
| C | ● | | | ● | | | ● |
| D | ● | | | | ● | | ● |
| N | | ● | | ● | | ● | |
| P | | ● | | | ● | ● | |
| Q | | ● | | ● | | | ● |
| R | | ● | | | ● | | ● |
| S | | | ● | ● | | ● | |
| T | | | ● | | ● | ● | |
| U | | | ● | ● | | | ● |
| V | | | ● | | ● | | ● |

**MSME(750 W [400 V], 1.0 kW to 15.0 kW), MDME, MFME, MGME, MHME**

| Symbol | Shaft: Round | Shaft: Key-way | Holding brake: without | Holding brake: with | Oil seal: without | Oil seal: with |
|---|---|---|---|---|---|---|
| C | ● | | ● | | | ● |
| D | ● | | | ● | | ● |
| G | | ● | ● | | | ● |
| H | | ● | | ● | | ● |

**Design order**

| Symbol | Specifications |
|---|---|
| C | IP65 motor |
| 1 | IP67 motor (MSMD, MHMD: IP65) |

## Motor with reduction gear

**M S M E 0 1 1 G 3 1 N**

| Symbol | Type |
|---|---|
| MSMD | Low inertia (100 W to 750 W) |
| MSME | Low inertia (100 W to 750 W) |
| MHMD | High inertia (200 W to 750 W) |

**Motor rated output**

| Symbol | Rated output |
|---|---|
| 01 | 100 W |
| 02 | 200 W |
| 04 | 400 W |
| 08 | 750 W |

**Voltage specifications**

| Symbol | Specifications |
|---|---|
| 1 | 100 V |
| 2 | 200 V |

**Rotary encoder specifications**

| Symbol | Format | Pulse counts | Resolution | Wires |
|---|---|---|---|---|
| G | Incremental | 20-bit | 1048576 | 5 |
| S | Absolute | 17-bit | 131072 | 7 |

* S: can be used in incremental.

**Gear ratio, gear type**

| Symbol | Gear reduction ratio | Motor output (W): 100 | 200 | 400 | 750 | Gear type |
|---|---|---|---|---|---|---|
| 1N | 1/5 | ● | ● | ● | ● | For high accuracy |
| 2N | 1/9 | ● | ● | ● | ● | |
| 3N | 1/15 | ● | ● | ● | ● | |
| 4N | 1/25 | ● | ● | ● | ● | |

* MHMD 100 W is not prepared.

**Motor structure**

| Symbol | Shaft: Key-way | Holding brake: without | Holding brake: with |
|---|---|---|---|
| 3 | ● | ● | |
| 4 | ● | | ● |

## Servo Driver

**Speed, Position, Torque, Full-closed type** **M A D K T 1 5 0 5 ∗ ∗ ∗** — **Special specifications**

**Position control type** **M A D K T 1 5 0 5 E ∗ ∗** — **Special specifications**

**Only position control**

**Frame symbol ***

| Symbol | Frame | Symbol | Frame |
|---|---|---|---|
| MAD | Frame A | MED | Frame E |
| MBD | Frame B | MFD | Frame F |
| MCD | Frame C | MGD | Frame G |
| MDD | Frame D | MHD | Frame H |

* A5ⅡE, A5E series is up to F-frame.

**Series**

| Symbol | Velocity, Position, Torque, Full-Closed type | Position control type |
|---|---|---|
| K | A5Ⅱ series | A5ⅡE series |
| H | A5 series | A5E series |

**Power device Max. current rating**

| Symbol | Current rating |
|---|---|
| T1 | 10 A |
| T2 | 15 A |
| T3 | 30 A |
| T4 | 35 A |
| T5 | 50 A |
| T7 | 75 A |
| TA | 100 A |
| TB | 150 A |
| TC | 300 A |

**Supply voltage specifications**

| Symbol | Specifications |
|---|---|
| 1 | Single phase, 100 V |
| 3 | 3-phase, 200 V |
| 4 | 3-phase, 400 V |
| 5 | Single/3-phase, 200 V |

**Current detector current rating**

| Symbol | Specifications | Symbol | Specifications |
|---|---|---|---|
| 05 | 5 A | 40 | 40 A |
| 07 | 7.5 A | 64 | 64 A |
| 10 | 10 A | 90 | 90 A |
| 12 | 12 A | A2 | 120 A |
| 20 | 20 A | B4 | 240 A |
| 30 | 30 A | | |

# Overall Wiring

## [Connector type (100/200 V: A-frame to E-frame)]

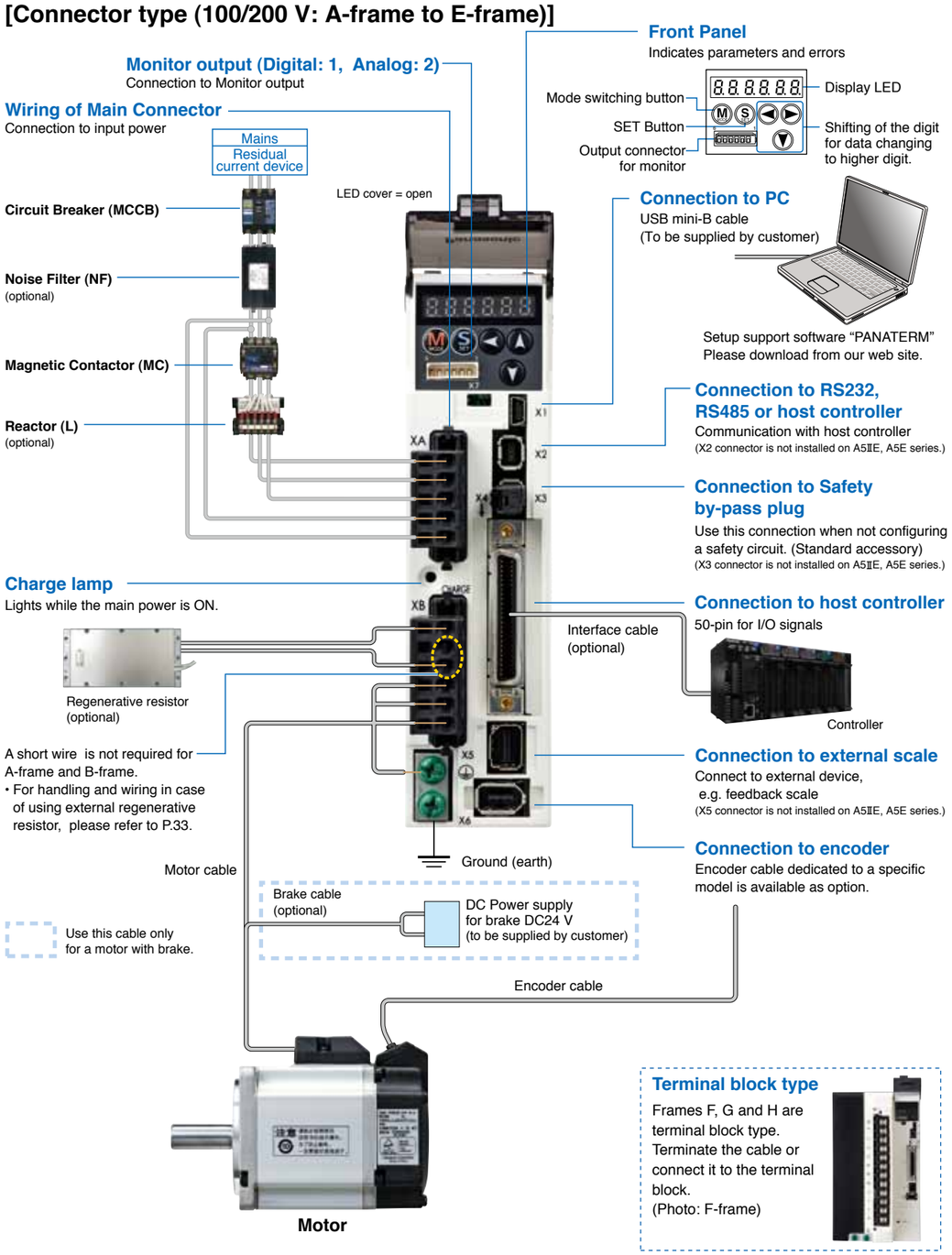


## [Connector type (400 V: D, E-frame)]

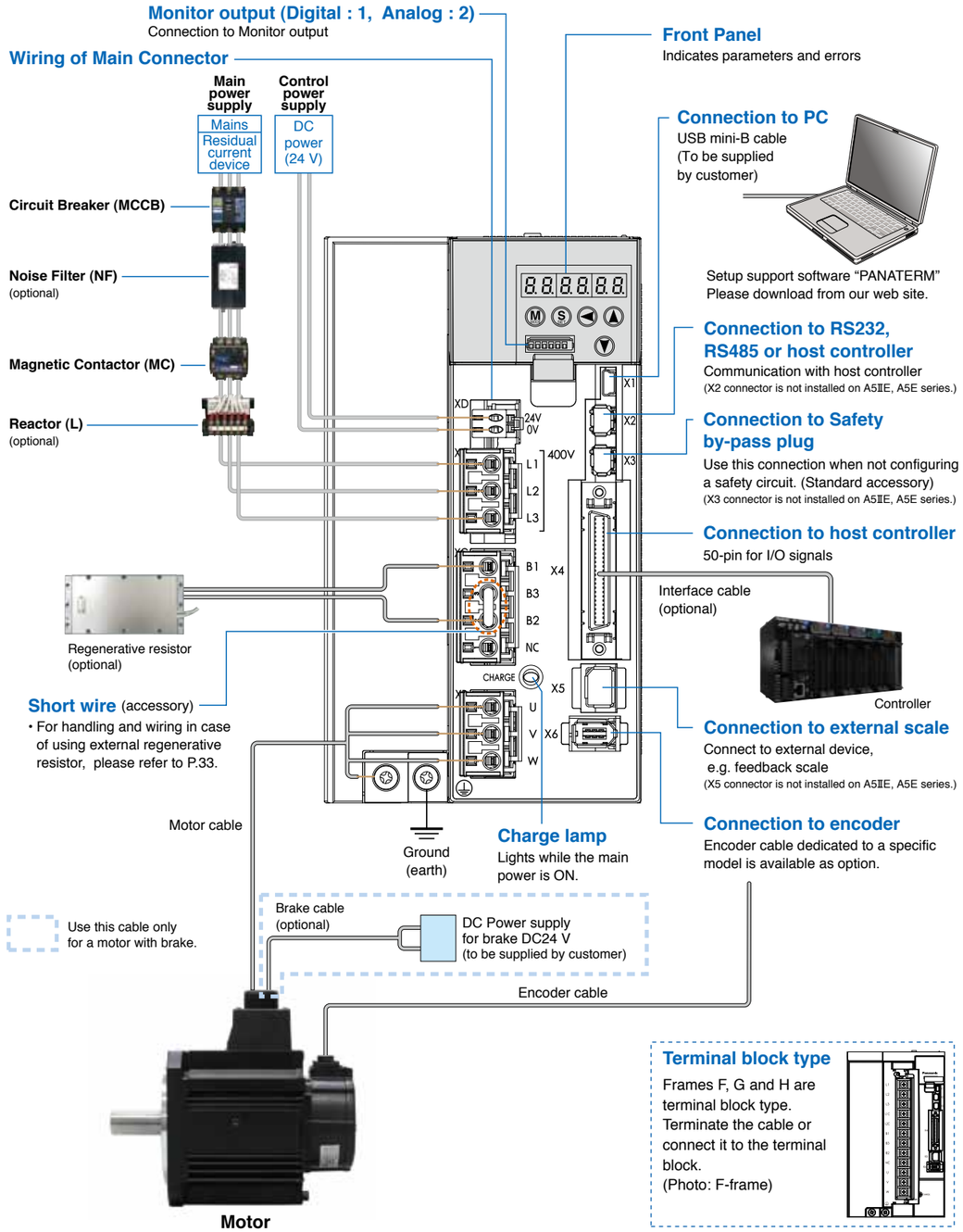


**<Caution>**

Apply adequate tightening torque to the product mounting screw by taking into consideration strength of the screw and the characteristics of material to which the product is installed. Overtightening can damage the screw and/or material; undertightening can result in loosening.

Example) Steel screw (M5) into steel section: 2.7 N·m to 3.3 N·m.

**<Note>**

Initial setup of rotational direction: positive = CCW and negative = CW.
Pay an extra attention.

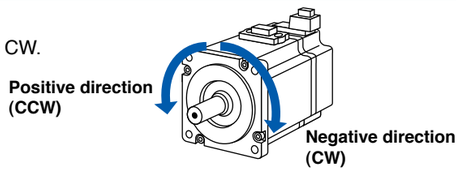

# Driver and List of Applicable Peripheral Equipments

| Driver | Applicable motor | Voltage *1 | Rated output | Required Power (at the rated load) | Circuit breaker (rated current) | Noise filter (Single phase / 3-phase) | Surge absorber (Single phase / 3-phase) | Noise filter for signal | Rated operating current of magnetic contactor (Contactor configuration) *2 | Diameter and withstand voltage of main circuit cable | Crimp terminal for main circuit terminal block *4 | Diameter and withstand voltage of control power supply cable | Crimp terminal for control power supply terminal block | Diameter and withstand voltage of motor cable *5 | Diameter and withstand voltage of brake cable |
|---|---|---|---|---|---|---|---|---|---|---|---|---|---|---|---|
| MADH MADK | MSME MSMD MHMD | Single phase, 100 V | 50 W to 100 W | approx. 0.4 kVA | 10 A | DV0P4170 | DV0P4190 | DV0P1460 | 20 A (3P+1a) | 0.75 mm²/ AWG18 600 VAC or more | Connection to exclusive connector | 0.75 mm²/ AWG18 600 VAC or more | Connection to exclusive connector | 0.75 mm²/ AWG18 600 VAC or more | 0.28 mm² to 0.75 mm²/ AWG22 to AWG18 100 VAC or more |
| | | Single/ 3-phase, 200 V | 50 W to 200 W | approx. 0.5 kVA | | DV0P4170 / DV0PM20042 | DV0P4190 / DV0P1450 | | | | | | | | |
| MBDH MBDK | MSME MSMD MHMD | Single 100 V | 200 W | approx. 0.5 kVA | | DV0P4170 | DV0P4190 | | | | | | | | |
| | | Single/ 3-phase, 200 V | 400 W | approx. 0.9 kVA | | DV0P4170 / DV0PM20042 | DV0P4190 / DV0P1450 | | | | | | | | |
| MCDH MCDK | MSME MSMD MHMD | Single 100 V | 400 W | approx. 0.9 kVA | | DV0PM20042 | DV0P4190 | | | | | | | | |
| | | Single/ 3-phase, 200 V | 750 W | approx. 1.3 kVA | 15 A | | DV0P4190 / DV0P1450 | | | | | | | | |
| MDDH MDDK | MDME | Single/ 3-phase, 200 V | 1.0 kW | approx. 1.8 kVA | | DV0P4220 | | | 30 A (3P+1a) | 2.0 mm²/ AWG14 600V VAC or more | | | | 2.0 mm²/ AWG14 600V VAC or more | |
| | MHME | | | | | | | | | | | | | | |
| | MGME | | 0.9 kW | approx. 1.8 kVA | 20 A | | | | | | | | | | |
| | MSME | | 1.0 kW | approx. 1.8 kVA | | | | | | | | | | | |
| | MHME | | 1.5 kW | approx. 2.3 kVA | | | | | | | | | | | |
| | MDME | | | | | | | | | | | | | | |
| | MSME | | | | | | | | | | | | | | |
| | MDME | 3-phase, 400 V | 400 W | approx. 0.9 kVA | 10 A | FN258L-16-07 (Recommended component) | DV0PM20050 | | 20 A (3P+1a) | | | 0.52 mm²/ AWG20 100 VAC or more | | | |
| | MDME | | 600 W | approx. 1.2 kVA | | | | | | | | | | | |
| | MSME | | 750 W | approx. 1.6 kVA | | | | | | | | | | | |
| | MSME | | 1.0 kW | approx. 1.8 kVA | | | | | | | | | | | |
| | MDME | | | | | | | | | | | | | | |
| | MHME | | | | | | | | | | | | | | |
| | MGME | | 0.9 kW | | | | | | | | | | | | |
| | MSME | | 1.5 kW | approx. 2.3 kVA | | | | | | | | | | | |
| | MDME | | | | | | | | | | | | | | |
| | MFME | | | | | | | | | | | | | | |
| | MHME | | | | | | | | | | | | | | |
| MEDH MEDK | MDME | 3-phase, 200 V | 2.0 kW | approx. 3.3 kVA | 30 A | DV0PM20043 | DV0P1450 | DV0P1460 RJ8035 (Recommended component) *6 | 60 A (3P+1a) | | | 0.75 mm²/ AWG18 600 VAC or more | | | |
| | MSME | | | | | | | | | | | | | | |
| | MHME | | | | | | | | | | | | | | |
| | MFME | | 2.5 kW | approx. 3.8 kVA | | | | | | | | | | | |
| | MSME | 3-phase, 400 V | 2.0 kW | approx. 3.3 kVA | 15 A | FN258L-16-07 (Recommended component) | DV0PM20050 | DV0P1460 | 30 A (3P+1a) | | | 0.52 mm²/ AWG20 100 VAC or more | | | |
| | MDME | | | | | | | | | | | | | | |
| | MHME | | | | | | | | | | | | | | |
| | MFME | | 2.5 kW | approx. 3.8 kVA | | | | | | | | | | | |
| MFDH MFDK | MGME | 3-phase, 200 V | 2.0 kW | approx. 3.8 kVA | 50 A | DV0P3410 | DV0P1450 | DV0P1460 RJ8035 (Recommended component) *6 | 60 A (3P+1a) | 3.5 mm²/ AWG12 600 VAC or more | 11 mm or smaller φ5.3 Terminal block M5 | 0.75 mm²/ AWG18 600 VAC or more | 11 mm or smaller φ5.3 Terminal block M5 | 3.5 mm²/ AWG12 600 VAC or more | 0.75 mm²/ AWG18 100 VAC or more |
| | MDME | | 3.0 kW | approx. 4.5 kVA | | | | | | | | | | | |
| | MHME | | 4.0 kW | approx. 6.0 kVA | | | | | 100 A (3P+1a) | | | | | | |
| | MSME | | | | | | | | | | | | | | |
| | MFME | | 4.5 kW | approx. 6.8 kVA | | | | | | | | | | | |
| | MGME | | 5.0 kW | approx. 7.5 kVA | | | | | | | | | | | |
| | MDME | | | | | | | | | | | | | | |
| | MHME | | | | | | | | | | | | | | |
| | MSME | | | | | | | | | | | | | | |
| | MGME | 3-phase, 400 V | 2.0 kW | approx. 3.8 kVA | 30 A | FN258L-30-07 (Recommended component) | DV0PM20050 | DV0P1460 | 60 A (3P+1a) | | 10 mm or smaller φ4.3 Terminal block M4 | 0.75 mm²/ AWG18 100 VAC or more | 7 mm or smaller φ3.2 Terminal block M3 | | |
| | MSME | | 3.0 kW | approx. 4.5 kVA | | | | | | | | | | | |
| | MDME | | | | | | | | | | | | | | |
| | MGME | | | | | | | | | | | | | | |
| | MHME | | 4.0 kW | approx. 6.0 kVA | | | | | | | | | | | |
| | MSME | | | | | | | | | | | | | | |
| | MDME | | | | | | | | | | | | | | |
| | MHME | | | | | | | | | | | | | | |
| | MFME | | 4.5 kW | approx. 6.8 kVA | | | | | | | | | | | |
| | MGME | | 5.0 kW | approx. 7.5 kVA | | | | | | | | | | | |
| | MSME | | | | | | | | | | | | | | |
| | MDME | | | | | | | | | | | | | | |
| | MHME | | | | | | | | | | | | | | |
| MGDH MGDK | MDME | 3-phase, 200 V | 7.5 kW | approx. 11 kVA | 60 A | FS5559-60-34 (Recommended component) | DV0P1450 | DV0P1460 RJ8095 (Recommended component) T400-61D (Recommended component) *6 | 100 A (3P+1a) | 5.3 mm²/ AWG10 600 VAC or more | 11 mm or smaller φ5.3 Terminal block M5 | 0.75 mm²/ AWG18 600 VAC or more | 10 mm or smaller φ5.3 Terminal block M5 | 13.3 mm²/ AWG6 600 VAC or more | |
| | MGME | | 6.0 kW | approx. 9.0 kVA | | | | | | | | | | | |
| | MHME | | 7.5 kW | approx. 11 kVA | | | | | | | | | | | |
| | MDME | 3-phase, 400 V | 7.5 kW | approx. 11 kVA | 30 A | FN258-42-07 or FN258-42-33 (Recommended component) | DV0PM20050 | | 60 A (3P+1a) | | | 0.75 mm²/ AWG18 100 VAC or more | | | |
| | MGME | | 6.0 kW | approx. 9.0 kVA | | | | | | | | | | | |
| | MHME | | 7.5 kW | approx. 11 kVA | | | | | | | | | | | |
| MHDH MHDK | MDME | 3-phase, 200 V | 11 kW | approx. 17 kVA | 100 A | FS5559-80-34 (Recommended component) | DV0P1450 | | 150 A (3P+1a) | 13.3 mm²/ AWG6 600 VAC or more *3 | 16 mm or smaller φ6.4 Terminal block M6 | 0.75 mm²/ AWG18 600 VAC or more | 10 mm or smaller φ4.3 Terminal block M4 | 21.1 mm²/ AWG4 600 VAC or more | |
| | | | 15 kW | approx. 22 kVA | 125 A | | | | | | | | | | |
| | | 3-phase, 400 V | 11 kW | approx. 17 kVA | 50 A | FN258-42-07 or FN258-42-33 (Recommended component) | DV0PM20050 | | 100 A (3P+1a) | | | 0.75 mm²/ AWG18 100 VAC or more | | 13.3 mm²/ AWG6 600 VAC or more | |
| | | | 15 kW | approx. 22 kVA | 60 A | | | | | | | | | 21.1 mm²/ AWG4 600 VAC or more | |



*1 Select peripheral equipments for single/3phase common specification according to the power source.
*2 For the external dynamic brake resistor, use the magnetic contactor with the same rating as that for the main circuit.
*3 When use the external regenerative resistor of the option (DV0PM20058, DV0PM20059), use the cable with the same diameter as the main circuit cable.
*4 For the ground screw, use the same crimp terminal as that for the main circuit terminal block.
*5 The diameter of the ground cable and the external dynamic brake resistor cable must be equal to, or larger than that of the motor cable.
The motor cable is a shield cable, which conforms to the EC Directives and UL Standards. (G, H-frame only)
*6 Use thses products to suit an international standard.

• Related page

Noise filter .....P.250 “Composition of Peripheral Equipments”
Surge absorber.....P.253 “Composition of Peripheral Equipments”
Noise filter for signal.....P.254 “Composition of Peripheral Equipments”
Motor/brake connector .....P.186, P.187 “Specifications of Motor connector”

• About circuit breaker and magnetic contactor

To comply to EC Directives, install a circuit break er between the power and the noise filter without fail, and the circuit breaker should conform to IEC Standards and UL recognized (Listed and UL marked).
Suitable for use on a circuit capable of delivering not more than 5000 Arms symmetrical amperes, below the maximum input voltage of the product.
If the short-circuit current of the power supply exceeds this value, install a current limit device (current limiting fuse, current limiting circuit breaker, transformer, etc.) to limit the short-circuit current.

<Remarks>

• Select a circuit breaker and noise filter which match to the capacity of power supply (including a load condition).

• Terminal block and protective earth terminals
  • Use a copper conductor cables with temperature rating of 75 ˚C or higher.
  • Use the attached exclusive connector for A-frame to E-frame, and maintain the peeled off length of 8 mm to 9 mm.

Fastening torque list (Terminal block screw/Terminal cover fastening screw)

| Driver | | Terminal block screw | | Terminal cover fastening screw | |
|---|---|---|---|---|---|
| Frame | Terminal name | Nominal size | Fastening torque (N•m) | Nominal size | Fastening torque (N•m) |
| F(200 V) | L1, L2, L3, L1C, L2C, B1, B2, B3, NC, U, V, W | M5 | 1.0 to 1.7 | M3 | 0.19 to 0.21 |
| F(400 V) | 24V、0V | M3 | 0.4 to 0.6 | | |
| | L1, L2, L3, B1, B2, B3, NC, U, V, W | M4 | 0.7 to 1.0 | | |
| G | L1C, L2C, 24V, 0V, DB1, DB2, DB3, DB4, NC | M5 | 1.0 to 1.7 | | |
| | L1, L2, L3, B1, B2, NC, U, V, W | M5 | 2.0 to 2.4 | M3 | 0.3 to 0.5 |
| H | L1C, L2C, 24V, 0V, DB1, DB2 | M4 | 0.7 to 1.0 | M5 | 2.0 to 2.5 |
| | L1, L2, L3, B1, B2, NC, U, V, W | M6 | 2.2 to 2.5 | | |

Fastening torque list (Ground terminal screw/Connector to host controller [X4])

| Driver frame | Ground screw | | Connector to host controller (X4) | |
|---|---|---|---|---|
| | Nominal size | Fastening torque (N•m) | Nominal size | Fastening torque (N•m) |
| A to E | M4 | 0.7 to 0.8 | M2.6 | 0.3 to 0.35 |
| G | M5 | 1.4 to 1.6 | | |
| H | M6 | 2.4 to 2.6 | | |

<Caution>

• Applying fastening torque larger than the maximum value may result in damage to the product.
• Do not turn on power without tightening all terminal block screws properly, otherwise, loose contacts may generate heat (smoking, firing).

<Remarks>

• To check for looseness, conduct periodic inspection of fastening torque once a year.

# 50 W to 750 W (MSMD, MHMD: IP65 / MSME: IP67)

| Motor | | | | | | Driver | | | Power capacity (at rated load) (kVA) | Optional parts | | | | | | | | | |
|---|---|---|---|---|---|---|---|---|---|---|---|---|---|---|---|---|---|---|---|
| Motor series | | Power supply | Output (W) | Part No. Note) 1 | Rating/ Spec. (page) | A5II series A5 series Part No. (Speed, Position, Torque, Full-Closed type) Note) 2 | A5IIE series A5E series Part No. (Position control type) Note) 3,4 | Frame | | Encoder Cable: 20-bit Incremental Note) 5 | Encoder Cable: 17-bit Absolute Note) 4,5,8 | | Motor Cable: without Brake Note) 5 | Motor Cable: with Brake Note) 5 | Brake Cable Note) 5 | External Regenerative Resistor | Reactor (Single phase / 3-phase) | Noise Filter (Single phase / 3-phase) |
| Low inertia | MSMD (Leadwire type) 3000 r/min | Single phase 100 V | 50 | MSMD5AZ□1 ∗ | 49 | MAD◇T1105 | MAD◇T1105E | A-frame | Approx. 0.4 | MFECA 0**0EAM | MFECA 0**0EAE Note) 7 | | MFMCA 0**0EED | | MFMCB 0**0GET | DV0P4280 | DV0P227 | DV0P4170 |
| | | | 100 | MSMD011□1 ∗ | 51 | MAD◇T1107 | MAD◇T1107E | | Approx. 0.4 | | | | | | | | | |
| | | | 200 | MSMD021□1 ∗ | 53 | MBD◇T2110 | MBD◇T2110E | B-frame | Approx. 0.5 | | | | | | DV0P4283 | DV0P228 | | |
| | | | 400 | MSMD041□1 ∗ | 55 | MCD◇T3120 | MCD◇T3120E | C-frame | Approx. 0.9 | | | | | | DV0P4282 | | DV0PM20042 |
| | | Single phase/ 3-phase 200 V | 50 | MSMD5AZ□1 ∗ | 50 | MAD◇T1505 | MAD◇T1505E | A-frame | Approx. 0.5 | | | | | | DV0P4281 | DV0P227 / DV0P220 | DV0P4170 / DV0PM20042 |
| | | | 100 | MSMD012□1 ∗ | 52 | MAD◇T1505 | MAD◇T1505E | | Approx. 0.5 | | | | | | | | | |
| | | | 200 | MSMD022□1 ∗ | 54 | MAD◇T1507 | MAD◇T1507E | | Approx. 0.5 | | | | | | DV0P4283 | | | |
| | | | 400 | MSMD042□1 ∗ | 56 | MBD◇T2510 | MBD◇T2510E | B-frame | Approx. 0.9 | | | | | | | DV0P228 / DV0P220 | | |
| | | | 750 | MSMD082□1 ∗ | 57 | MCD◇T3520 | MCD◇T3520E | C-frame | Approx. 1.3 | | | | | | | | DV0PM20042 |
| | MSME (Connector type) 3000 r/min | Single phase 100 V | 50 | MSME5AZ□1 ∗ | 65 | MAD◇T1105 | MAD◇T1105E | A-frame | Approx. 0.4 | MFECA 0**0MJD (For movable, direction of motor shaft) | MFECA 0**0MJE (For movable, direction of motor shaft) | | MFMCA 0**0NJD (For movable, direction of motor shaft) | | MFMCB 0**0PJT (For movable, direction of motor shaft) | DV0P4280 | DV0P227 | DV0P4170 |
| | | | 100 | MSME011□1 ∗ | 67 | MAD◇T1107 | MAD◇T1107E | | Approx. 0.4 | | | | | | | | | |
| | | | 200 | MSME021□1 ∗ | 69 | MBD◇T2110 | MBD◇T2110E | B-frame | Approx. 0.5 | MFECA 0**0MKD (For movable, opposite direction of motor shaft) | MFECA 0**0MKE (For movable, opposite direction of motor shaft) | | MFMCA 0**0NKD (For movable, opposite direction of motor shaft) | | MFMCB 0**0PKT (For movable, opposite direction of motor shaft) | DV0P4283 | DV0P228 | |
| | | | 400 | MSME041□1 ∗ | 71 | MCD◇T3120 | MCD◇T3120E | C-frame | Approx. 0.9 | | | | | | DV0P4282 | | DV0PM20042 |
| | | Single phase/ 3-phase 200 V | 50 | MSME5AZ□1 ∗ | 66 | MAD◇T1505 | MAD◇T1505E | A-frame | Approx. 0.5 | MFECA 0**0TJD (For fixed, direction of motor shaft) | MFECA 0**0TJE (For fixed, direction of motor shaft) | | MFMCA 0**0RJD (For fixed, direction of motor shaft) | | MFMCB 0**0SJT (For fixed, direction of motor shaft) | DV0P4281 | DV0P227 / DV0P220 | DV0P4170 / DV0PM20042 |
| | | | 100 | MSME012□1 ∗ | 68 | MAD◇T1505 | MAD◇T1505E | | Approx. 0.5 | | | | | | | | | |
| | | | 200 | MSME022□1 ∗ | 70 | MAD◇T1507 | MAD◇T1507E | | Approx. 0.5 | | | | | | DV0P4283 | | | |
| | | | 400 | MSME042□1 ∗ | 72 | MBD◇T2510 | MBD◇T2510E | B-frame | Approx. 0.9 | MFECA 0**0TKD (For fixed, opposite direction of motor shaft) | MFECA 0**0TKE (For fixed, opposite direction of motor shaft) | | MFMCA 0**0RKD (For fixed, opposite direction of motor shaft) Note) 6 | | MFMCB 0**0SKT (For fixed, opposite direction of motor shaft) | | DV0P228 / DV0P220 | |
| | | | 750 | MSME082□1 ∗ | 73 | MCD◇T3520 | MCD◇T3520E | C-frame | Approx. 1.3 | | | | | | | | | DV0PM20042 |
| High inertia | MHMD (Leadwire type) 3000 r/min | Single phase 100 V | 200 | MHMD021□1 ∗ | 59 | MBD◇T2110 | MBD◇T2110E | B-frame | Approx. 0.5 | MFECA 0**0EAM | MFECA 0**0EAE Note) 7 | | MFMCA 0**0EED | | MFMCB 0**0GET | DV0P4283 | DV0P228 | DV0P4170 |
| | | | 400 | MHMD041□1 ∗ | 61 | MCD◇T3120 | MCD◇T3120E | C-frame | Approx. 0.9 | | | | | | DV0P4282 | | DV0PM20042 |
| | | Single phase/ 3-phase 200 V | 200 | MHMD022□1 ∗ | 60 | MAD◇T1507 | MAD◇T1507E | A-frame | Approx. 0.5 | | | | | | DV0P4283 | DV0P227 / DV0P220 | DV0P4170 / DV0PM20042 |
| | | | 400 | MHMD042□1 ∗ | 62 | MBD◇T2510 | MBD◇T2510E | B-frame | Approx. 0.9 | | | | | | | DV0P228 / DV0P220 | | |
| | | | 750 | MHMD082□1 ∗ | 63 | MCD◇T3520 | MCD◇T3520E | C-frame | Approx. 1.3 | | | | | | | | | DV0PM20042 |

Note) 1 Rotary encoder specifications: □ Motor specification: ∗ (refer to P.16)
Note) 2 ◇ : Drivers series K: A5II series H: A5 series
Note) 3 ◇ : Drivers series K: A5IIE series H: A5E series
Note) 4 Because A5IIE, A5E series drivers (dedicated for position control) do not support the 17-bit absolute specification, only 20-bit incremental type can be used in combination.
Note) 5 Cable length: ** (03: 3 m, 05: 5 m, 10: 10 m, 20: 20 m) (Example. 3 m: MFECA0030EAM)
Note) 6 Cables for opposite to output shaft cannot be used with 50 W or 100 W motor.
Note) 7 When you use a 17-bit absolute encoder as an incremental encoder, please use the encoder cable MFECA0**0EAD.
Note) 8 Please note that a battery is not supplied together with 17-bit absolute encoder cable (with battery box). Please buy the battery part number "DV0P2990" separately.

## • Selection of cable for MSME motor (Movable: For application where the cable is movable. Fixed: For application where the cable is fixed.)

### • Encoder cable

Example: MFECA0∗∗0 ◇ △ □

◇ : Cable type

| Symbol | Specifications |
|---|---|
| M | Movable |
| T | Fixed |

△ : Cable direction

| Symbol | Specifications |
|---|---|
| J | Direction of motor shaft |
| K | Opposite direction of motor shaft |

□ : Encoder Specifications

| Symbol | Specifications |
|---|---|
| D | 20-bit Incremental |
| E | 17-bit Absolute |

### • Motor cable

Example: MFMCA0∗∗0 ◇ △ D

◇ : Cable type

| Symbol | Specifications |
|---|---|
| N | Movable |
| R | Fixed |

△ : Cable direction

| Symbol | Specifications |
|---|---|
| J | Direction of motor shaft |
| K | Opposite direction of motor shaft |

### • Brake cable

Example: MFMCB0∗∗0 ◇ △ T

◇ : Cable type

| Symbol | Specifications |
|---|---|
| P | Movable |
| S | Fixed |

△ : Cable direction

| Symbol | Specifications |
|---|---|
| J | Direction of motor shaft |
| K | Opposite direction of motor shaft |

## • Options

| Title | | | Part No. | Page |
|---|---|---|---|---|
| Interface Cable | | | DV0P4360 | 197 |
| Interface Conversion Cable | | | DV0P4120 | |
| | | | DV0P4121 | |
| | | | DV0P4130 | |
| | | | DV0P4131 | |
| | | | DV0P4132 | |
| Connector Kit for Power Supply Input Connection | A-frame to D-frame | Single row type | DV0PM20032 | 200 |
| | | Double row type | DV0PM20033 | |
| Connector Kit for Motor Connection | A-frame to D-frame | | DV0PM20034 | 201 |
| Connector Kit for Motor/Encoder Connection | | | DV0P4290 | 202 |
| | | | DV0P4380 | |
| | | | DV0PM20035 | 203 |
| Connector Kit for Motor/Brake Connection | | | DV0PM20040 | 206 |
| Connector Kit | RS485, RS232 | | DV0PM20024 | 198 |
| | Safety | | DV0PM20025 | |
| | Interface | | DV0P4350 | |
| | External Scale | | DV0PM20026 | 199 |
| | Encoder | | DV0PM20010 | |
| | Analog Monitor Signal | | DV0PM20031 | |
| Battery For Absolute Encoder | | | DV0P2990 | 207 |
| Battery Box Note) 8 | | | DV0P4430 | |
| Mounting Bracket | A-frame | | DV0PM20027 | 208 |
| | B-frame | | DV0PM20028 | |
| | C-frame | | DV0PM20029 | |
| Encoder Cable | without Battery Box | | MFECA0**0EAD | 188 |
| | | | MFECA0**0EAM | |
| | | | MFECA0**0MJD | 189 |
| | | | MFECA0**0MKD | |
| | | | MFECA0**0TJD | |
| | | | MFECA0**0TKD | |
| | with Battery Box Note) 8 | | MFECA0**0EAE | 188 |
| | | | MFECA0**0MJE | 189 |
| | | | MFECA0**0MKE | |
| | | | MFECA0**0TJE | |
| | | | MFECA0**0TKE | |
| Motor Cable | without Brake | | MFMCA0**0EED | 191 |
| | | | MFMCA0**0NJD | |
| | | | MFMCA0**0NKD | |
| | | | MFMCA0**0RJD | |
| | | | MFMCA0**0RKD | |
| Brake Cable | | | MFMCB0**0GET | 196 |
| | | | MFMCB0**0PJT | |
| | | | MFMCB0**0PKT | |
| | | | MFMCB0**0SJT | |
| | | | MFMCB0**0SKT | |
| External Regenerative Resistor | 50 Ω 25 W | | DV0P4280 | 210 |
| | 100 Ω 25 W | | DV0P4281 | |
| | 25 Ω 50 W | | DV0P4282 | |
| | 50 Ω 50 W | | DV0P4283 | |
| | 30 Ω 100 W | | DV0P4284 | |
| | 20 Ω 130 W | | DV0P4285 | |
| Reactor | DV0P220, DV0P221, DV0P222, DV0P223, DV0P224, DV0P225, DV0P227, DV0P228, DV0P20047 | | | 209 |
| Noise Filter | DV0P4170, DV0PM20042 DV0P4220, DV0PM20043 | | | 250 |
| | DV0P3410 | | | 251 |
| Surge Absorber | Single phase | | DV0P4190 | 253 |
| | 3-phase (200 V) | | DV0P1450 | |
| Noise Filter for Signal Lines | | | DV0P1460 | 254 |

# 0.4 kW to 5.0 kW IP65 motor

| Motor | | | | | | Driver | | | Power capacity (at rated load) (kVA) | Optional parts | | | | | | | | |
|---|---|---|---|---|---|---|---|---|---|---|---|---|---|---|---|---|---|---|
| Motor series | | Power supply | Output (W) | Part No. Note) 1 | Rating/ Spec. (page) | A5Ⅱ series A5 series Part No. (Speed, Position, Torque, Full-Closed type) Note) 2 | A5ⅡE series A5E series Part No. (Position control type) Note) 3,4 | Frame | | Encoder Cable: 20-bit Incremental Note) 5 | Encoder Cable: 17-bit Absolute Note) 4,5,8 | | Motor Cable: without Brake Note) 5 | Motor Cable: with Brake Note) 5 | Brake Cable Note) 5 | External Regenerative Resistor | Reactor (Single phase / 3-phase) | Noise Filter |
| Low inertia | MSME 3000 r/min | Single phase/ 3-phase 200 V | 1000 | MSME102 □ C ∗ | 74 | MDD ◇ T5540 | MDD ◇ T5540E | D-frame | Approx. 1.8 | MFECA 0**0ESD | MFECA 0**0ESE | | MFMCD 0**2ECD | MFMCA 0**2FCD | — | DV0P4284 | DV0P228 / DV0P222 | DV0P4220 |
| | | | 1500 | MSME152 □ C ∗ | 75 | MDD ◇ T5540 | MDD ◇ T5540E | | Approx. 2.3 | | | | | | | | DV0PM20047 / DV0P222 | |
| | | 3-phase 200 V | 2000 | MSME202 □ C ∗ | 76 | MED ◇ T7364 | MED ◇ T7364E | E-frame | Approx. 3.3 | | | | | | | DV0P4285 Note) 6 | DV0P223 | DV0PM20043 |
| | | | 3000 | MSME302 □ C ∗ | 77 | MFD ◇ TA390 | MFD ◇ TA390E | F-frame | Approx. 4.5 | | | | MFMCA 0**3ECT | MFMCA 0**3FCT | | DV0P4285 ×2 in parallel | DV0P224 | DV0P3410 |
| | | | 4000 | MSME402 □ C ∗ | 78 | MFD ◇ TB3A2 | MFD ◇ TB3A2E | | Approx. 6 | | | | | | | | DV0P225 | |
| | | | 5000 | MSME502 □ C ∗ | 79 | MFD ◇ TB3A2 | MFD ◇ TB3A2E | | Approx. 7.5 | | | | | | | | — Note) 7 | |
| | | 3-phase 400 V | 750 | MSME084 □ C ∗ | 104 | MDD ◇ T2412 | MDD ◇ T2412E | D-frame | Approx. 1.6 | MFECA 0**0ESD | MFECA 0**0ESE | | MFMCD 0**2ECD | MFMCE 0**2FCD | — | DV0PM20048 | — Note) 7 | Recommended components P.252 |
| | | | 1000 | MSME104 □ C ∗ | 105 | MDD ◇ T3420 | MDD ◇ T3420E | | Approx. 1.8 | | | | | | | | | |
| | | | 1500 | MSME154 □ C ∗ | 106 | MDD ◇ T3420 | MDD ◇ T3420E | | Approx. 2.3 | | | | | | | | | |
| | | | 2000 | MSME204 □ C ∗ | 107 | MED ◇ T4430 | MED ◇ T4430E | E-frame | Approx. 3.3 | | | | | | | DV0PM20049 | | |
| | | | 3000 | MSME304 □ C ∗ | 108 | MFD ◇ T5440 | MFD ◇ T5440E | F-frame | Approx. 4.5 | | | | MFMCA 0**3ECT | MFMCA 0**3FCT | | DV0PM20049 ×2 in parallel | | |
| | | | 4000 | MSME404 □ C ∗ | 109 | MFD ◇ TA464 | MFD ◇ TA464E | | Approx. 6 | | | | | | | | | |
| | | | 5000 | MSME504 □ C ∗ | 110 | MFD ◇ TA464 | MFD ◇ TA464E | | Approx. 7.5 | | | | | | | | | |
| Middle inertia | MDME 2000 r/min | Single phase/ 3-phase 200 V | 1000 | MDME102 □ C ∗ | 80 | MDD ◇ T3530 | MDD ◇ T3530E | D-frame | Approx. 1.8 | MFECA 0**0ESD | MFECA 0**0ESE | | MFMCD 0**2ECD | MFMCA 0**2FCD | — | DV0P4284 | DV0P228 / DV0P222 | DV0P4220 |
| | | | 1500 | MDME152 □ C ∗ | 81 | MDD ◇ T5540 | MDD ◇ T5540E | | Approx. 2.3 | | | | | | | | DV0PM20047 / DV0P222 | |
| | | 3-phase 200 V | 2000 | MDME202 □ C ∗ | 82 | MED ◇ T7364 | MED ◇ T7364E | E-frame | Approx. 3.3 | | | | | | | DV0P4285 Note) 7 | DV0P223 | DV0PM20043 |
| | | | 3000 | MDME302 □ C ∗ | 83 | MFD ◇ TA390 | MFD ◇ TA390E | F-frame | Approx. 4.5 | | | | MFMCA 0**3ECT | MFMCA 0**3FCT | | DV0P4285 ×2 in parallel | DV0P224 | DV0P3410 |
| | | | 4000 | MDME402 □ C ∗ | 84 | MFD ◇ TB3A2 | MFD ◇ TB3A2E | | Approx. 6 | | | | | | | | DV0P225 | |
| | | | 5000 | MDME502 □ C ∗ | 85 | MFD ◇ TB3A2 | MFD ◇ TB3A2E | | Approx. 7.5 | | | | | | | | — Note) 7 | |
| | | 3-phase 400 V | 400 | MDME044 □ C ∗ | 111 | MDD ◇ T2407 | MDD ◇ T2407E | D-frame | Approx. 0.9 | MFECA 0**0ESD | MFECA 0**0ESE | | MFMCD 0**2ECD | MFMCE 0**2FCD | — | DV0PM20048 | — Note) 7 | Recommended components P.252 |
| | | | 600 | MDME064 □ C ∗ | 112 | MDD ◇ T2407 | MDD ◇ T2407E | | Approx. 1.2 | | | | | | | | | |
| | | | 1000 | MDME104 □ C ∗ | 113 | MDD ◇ T2412 | MDD ◇ T2412E | | Approx. 1.8 | | | | | | | | | |
| | | | 1500 | MDME154 □ C ∗ | 114 | MDD ◇ T3420 | MDD ◇ T3420E | | Approx. 2.3 | | | | | | | | | |
| | | | 2000 | MDME204 □ C ∗ | 115 | MED ◇ T4430 | MED ◇ T4430E | E-frame | Approx. 3.3 | | | | | | | DV0PM20049 | | |
| | | | 3000 | MDME304 □ C ∗ | 116 | MFD ◇ T5440 | MFD ◇ T5440E | F-frame | Approx. 4.5 | | | | MFMCA 0**3ECT | MFMCA 0**3FCT | | DV0PM20049 ×2 in parallel | | |
| | | | 4000 | MDME404 □ C ∗ | 117 | MFD ◇ TA464 | MFD ◇ TA464E | | Approx. 6 | | | | | | | | | |
| | | | 5000 | MDME504 □ C ∗ | 118 | MFD ◇ TA464 | MFD ◇ TA464E | | Approx. 7.5 | | | | | | | | | |
| | MGME (Low speed/ High torque type) 1000 r/min | Single phase/ 3-phase 200 V | 900 | MGME092 □ C ∗ | 92 | MDD ◇ T5540 | MDD ◇ T5540E | D-frame | Approx. 1.8 | MFECA 0**0ESD | MFECA 0**0ESE | | MFMCD 0**2ECD | MFMCA **2FCD | — | DV0P4284 | DV0P228 / DV0P221 | DV0P4220 |
| | | 3-phase 200 V | 2000 | MGME202 □ C ∗ | 93 | MFD ◇ TA390 | MFD ◇ TA390E | F-frame | Approx. 3.8 | | | | MFMCA 0**3ECT | MFMCA 0**3FCT | | DV0P4285 ×2 in parallel | DV0P223 | DV0P3410 |
| | | | 3000 | MGME302 □ C ∗ | 94 | MFD ◇ TB3A2 | MFD ◇ TB3A2E | | Approx. 4.5 | | | | | | | | DV0P224 | |
| | | 3-phase 400 V | 900 | MGME094 □ C ∗ | 125 | MDD ◇ T3420 | MDD ◇ T3420E | D-frame | Approx. 1.8 | MFECA 0**0ESD | MFECA 0**0ESE | | MFMCD 0**2ECD | MFMCE 0**2FCD | — | DV0PM20048 | — Note) 7 | Recommended components P.252 |
| | | | 2000 | MGME204 □ C ∗ | 126 | MFD ◇ T5440 | MFD ◇ T5440E | F-frame | Approx. 3.8 | | | | MFMCA 0**3ECT | MFMCA 0**3FCT | | DV0PM20049 x2 in parallel | | |
| | | | 3000 | MGME304 □ C ∗ | 127 | MFD ◇ TA464 | MFD ◇ TA464E | | Approx. 4.5 | | | | | | | | | |
| High inertia | MHME 2000 r/min | Single phase/ 3-phase 200 V | 1000 | MHME102 □ C ∗ | 97 | MDD ◇ T3530 | MDD ◇ T3530E | D-frame | Approx. 1.8 | MFECA 0**0ESD | MFECA 0**0ESE | | MFMCD 0**2ECD | MFMCA 0**2FCD | — | DV0P4284 | DV0P228/ DV0P222 | DV0P4220 |
| | | | 1500 | MHME152 □ C ∗ | 98 | MDD ◇ T5540 | MDD ◇ T5540E | | Approx. 2.3 | | | | | | | | DV0PM20047/ DV0P222 | |
| | | 3-phase 200 V | 2000 | MHME202 □ C ∗ | 99 | MED ◇ T7364 | MED ◇ T7364E | E-frame | Approx. 3.3 | | | | MFMCE 0**2ECD | MFMCE 0**2FCD | | DV0P4285 Note) 6 | DV0P223 | DV0PM20043 |
| | | | 3000 | MHME302 □ C ∗ | 100 | MFD ◇ TA390 | MFD ◇ TA390E | F-frame | Approx. 4.5 | | | | MFMCA 0**3ECT | MFMCA 0**3FCT | | DV0P4285 ×2 in parallel | DV0P224 | DV0P3410 |
| | | | 4000 | MHME402 □ C ∗ | 101 | MFD ◇ TB3A2 | MFD ◇ TB3A2E | | Approx. 6 | | | | | | | | DV0P225 | |
| | | | 5000 | MHME502 □ C ∗ | 102 | MFD ◇ TB3A2 | MFD ◇ TB3A2E | | Approx. 7.5 | | | | | | | | — Note) 7 | |
| | | 3-phase 400 V | 1000 | MHME104 □ C ∗ | 130 | MDD ◇ T2412 | MDD ◇ T2412E | D-frame | Approx. 1.8 | MFECA 0**0ESD | MFECA 0**0ESE | | MFMCD 0**2ECD | MFMCE 0**2FCD | — | DV0PM20049 | — Note) 7 | Recommended components P.252 |
| | | | 1500 | MHME154 □ C ∗ | 131 | MDD ◇ T3420 | MDD ◇ T3420E | | Approx. 2.3 | | | | | | | | | |
| | | | 2000 | MHME204 □ C ∗ | 132 | MED ◇ T4430 | MED ◇ T4430E | E-frame | Approx. 3.3 | | | | MFMCE 0**2ECD | MFMCE 0**2FCD | | | | |
| | | | 3000 | MHME304 □ C ∗ | 133 | MFD ◇ T5440 | MFD ◇ T5440E | F-frame | Approx. 4.5 | | | | MFMCA 0**3ECT | MFMCA 0**3FCT | | DV0PM20049 ×2 in parallel | | |
| | | | 4000 | MHME404 □ C ∗ | 134 | MFD ◇ TA464 | MFD ◇ TA464E | | Approx. 6 | | | | | | | | | |
| | | | 5000 | MHME504 □ C ∗ | 135 | MFD ◇ TA464 | MFD ◇ TA464E | | Approx. 7.5 | | | | | | | | | |

Note) 1 Rotary encoder specifications: □ Motor specification: ∗ (refer to P.16)
Note) 2 ◇ : Drivers series K: A5Ⅱ series H: A5 series
Note) 3 ◇ : Drivers series K: A5ⅡE series H: A5E series
Note) 4 Because A5ⅡE, A5E series drivers (dedicated for position control) do not support the 17-bit absolute specification, only 20-bit incremental type can be used in combination.
Note) 5 Cable length: ** (03: 3 m, 05: 5 m, 10: 10 m, 20: 20 m), (Example. 3 m: MFECA0030EAM)
Note) 6 Other combinations exist, and refer to P.210 for details.
Note) 7 Reactor should be prepared by the user.
Note) 8 Please note that a battery is not supplied together with 17-bit absolute encoder cable (with battery box). Please buy the battery part number "DV0P2990" separately.





## • Options (IP65 motor)

| Title | | | Part No. | Page |
|---|---|---|---|---|
| Interface Cable | | | DV0P4360 | 197 |
| Interface Conversion Cable | | | DV0P4120 | |
| | | | DV0P4121 | |
| | | | DV0P4130 | |
| | | | DV0P4131 | |
| | | | DV0P4132 | |
| Connector Kit for Power Supply Input Connection | A-frame to D-frame | Single row type | DV0PM20032 | 200 |
| | | Double row type | DV0PM20033 | |
| | E-frame (200 V) | | DV0PM20044 | |
| | D-frame (400 V) | | DV0PM20051 | |
| | E-frame (400 V) | | DV0PM20052 | |
| Connector Kit for Control Power Supply Input Connection | D-frame and E-frame (400 V) | | DV0PM20053 | 201 |
| Connector Kit for Motor Connection | A-frame to D-frame | | DV0PM20034 | |
| | E-frame (200 V) | | DV0PM20046 | |
| | D-frame (400 V) | | DV0PM20054 | |
| Connector Kit for Regenerative Resistor | E-frame | | DV0PM20045 | |
| | D-frame (400 V) | | DV0PM20055 | |
| Connector Kit for Motor/Encoder Connection | | | DV0P4310 | 204 |
| | | | DV0P4320 | |
| | | | DV0P4330 | 205 |
| | | | DV0P4340 | |
| Connector Kit | RS485, RS232 | | DV0PM20024 | 198 |
| | Safety | | DV0PM20025 | |
| | Interface | | DV0P4350 | |
| | External Scale | | DV0PM20026 | 199 |
| | Encoder | | DV0PM20010 | |
| | Analog Monitor Signal | | DV0PM20031 | |
| Battery For Absolute Encoder | | | DV0P2990 | 207 |
| Battery Box Note) 8 | | | DV0P4430 | |
| Mounting Bracket | D-frame | | DV0PM20030 | 208 |
| Encoder Cable | without Battery Box | | MFECA0**0ESD | 189 |
| | with Battery Box Note) 8 | | MFECA0**0ESE | 190 |
| Motor Cable | without Brake | | MFMCA0**2ECD | 191 |
| | | | MFMCD0**2ECD | 192 |
| | | | MFMCE0**2ECD | |
| | | | MFMCF0**2ECD | |
| | | | MFMCA0**3ECT | 193 |
| | | | MFMCD0**3ECT | |
| | with Brake | | MFMCA0**2FCD | 194 |
| | | | MFMCE0**2FCD | |
| | | | MFMCA0**3FCT | 195 |
| External Regenerative Resistor | 50 Ω 25 W | | DV0P4280 | 210 |
| | 100 Ω 25 W | | DV0P4281 | |
| | 25 Ω 50 W | | DV0P4282 | |
| | 50 Ω 50 W | | DV0P4283 | |
| | 30 Ω 100 W | | DV0P4284 | |
| | 20 Ω 130 W | | DV0P4285 | |
| | 120 Ω 80 W | | DV0PM20048 | |
| | 80 Ω 190 W | | DV0PM20049 | |
| Reactor | DV0P220, DV0P221, DV0P222, DV0P223, DV0P224, DV0P225, DV0P227, DV0P228, DV0PM20047 | | | 209 |
| Noise Filter | DV0P4170, DV0PM20042 DV0P4220, DV0PM20043 | | | 250 |
| | DV0P3410 | | | 251 |
| Surge Absorber | Single phase | | DV0P4190 | 253 |
| | 3-phase (200 V) | | DV0P1450 | |
| | 3-phase (400 V) | | DV0PM20050 | |
| Noise Filter for Signal Lines | | | DV0P1460 | 254 |

# 400 W to 15.0 kW IP67 motor (MSME MDME MFME)

| Motor | | | | | | Driver | | | Power capacity (at rated load) (kVA) | Optional parts | | | | | | | | |
|---|---|---|---|---|---|---|---|---|---|---|---|---|---|---|---|---|---|---|
| Motor series | | Power supply | Output (W) | Part No. Note) 1 | Rating/ Spec. (page) | A5II series A5 series Part No. (Speed, Position, Torque, Full-Closed type) Note) 2 | A5IIE series A5E series Part No. (Position control type) Note) 3,4 | Frame | | Encoder Cable: 20-bit Incremental Note) 5 | Encoder Cable: 17-bit Absolute Note) 4,5,9 | | Motor Cable: without Brake Note) 5 | Motor Cable: with Brake Note) 5 | Brake Cable Note) 5 | External Regenerative Resistor | Reactor (Single phase / 3-phase) | Noise Filter |
| Low inertia | MSME 3000 r/min | Single phase/ 3-phase 200 V | 1000 | MSME102□1∗ | 74 | MDD◇T5540 | MDD◇T5540E | D-frame | Approx. 1.8 | MFECA 0**0ETD | MFECA 0**0ETE | | MFMCD 0**2ECD | MFMCA 0**2FCD | — | DV0P4284 | DV0P228 / DV0P222 | DV0P4220 |
| | | | 1500 | MSME152□1∗ | 75 | MDD◇T5540 | MDD◇T5540E | | Approx. 2.3 | | | | | | | | DV0PM20047 / DV0P222 | |
| | | 3-phase 200 V | 2000 | MSME202□1∗ | 76 | MED◇T7364 | MED◇T7364E | E-frame | Approx. 3.3 | | | | | | | DV0P4285 Note) 7 | DV0P223 | DV0PM20043 |
| | | | 3000 | MSME302□1∗ | 77 | MFD◇TA390 | MFD◇TA390E | F-frame | Approx. 4.5 | | | | MFMCA 0**3ECT | MFMCA 0**3FCT | | DV0P4285 ×2 in parallel | DV0P224 | DV0P3410 |
| | | | 4000 | MSME402□1∗ | 78 | MFD◇TB3A2 | MFD◇TB3A2E | | Approx. 6 | | | | | | | | DV0P225 | |
| | | | 5000 | MSME502□1∗ | 79 | MFD◇TB3A2 | MFD◇TB3A2E | | Approx. 7.5 | | | | | | | | — Note) 8 | |
| | | 3-phase 400 V | 750 | MSME084□1∗ | 104 | MDD◇T2412 | MDD◇T2412E | D-frame | Approx. 1.6 | MFECA 0**0ETD | MFECA 0**0ETE | | MFMCD 0**2ECD | MFMCE 0**2FCD | — | DV0PM20048 | — Note) 8 | Recommended components P.252 |
| | | | 1000 | MSME104□1∗ | 105 | MDD◇T3420 | MDD◇T3420E | | Approx. 1.8 | | | | | | | | | |
| | | | 1500 | MSME154□1∗ | 106 | MDD◇T3420 | MDD◇T3420E | | Approx. 2.3 | | | | | | | | | |
| | | | 2000 | MSME204□1∗ | 107 | MED◇T4430 | MED◇T4430E | E-frame | Approx. 3.3 | | | | | | | DV0PM20049 | | |
| | | | 3000 | MSME304□1∗ | 108 | MFD◇T5440 | MFD◇T5440E | F-frame | Approx. 4.5 | | | | MFMCA 0**3ECT | MFMCA 0**3FCT | | DV0PM20049 ×2 in parallel | | |
| | | | 4000 | MSME404□1∗ | 109 | MFD◇TA464 | MFD◇TA464E | | Approx. 6 | | | | | | | | | |
| | | | 5000 | MSME504□1∗ | 110 | MFD◇TA464 | MFD◇TA464E | | Approx. 7.5 | | | | | | | | | |
| Middle inertia | MDME 2000 r/min | Single phase/ 3-phase 200 V | 1000 | MDME102□1∗ | 80 | MDD◇T3530 | MDD◇T3530E | D-frame | Approx. 1.8 | MFECA 0**0ETD | MFECA 0**0ETE | | MFMCD 0**2ECD | MFMCA 0**2FCD | — | DV0P4284 | DV0P228 / DV0P222 | DV0P4220 |
| | | | 1500 | MDME152□1∗ | 81 | MDD◇T5540 | MDD◇T5540E | | Approx. 2.3 | | | | | | | | DV0PM20047 / DV0P222 | |
| | | 3-phase 200 V | 2000 | MDME202□1∗ | 82 | MED◇T7364 | MED◇T7364E | E-frame | Approx. 3.3 | | | | | | | DV0P4285 Note) 7 | DV0P223 | DV0PM20043 |
| | | | 3000 | MDME302□1∗ | 83 | MFD◇TA390 | MFD◇TA390E | F-frame | Approx. 4.5 | | | | MFMCA 0**3ECT | MFMCA 0**3FCT | | DV0P4285 ×2 in parallel | DV0P224 | DV0P3410 |
| | | | 4000 | MDME402□1∗ | 84 | MFD◇TB3A2 | MFD◇TB3A2E | | Approx. 6 | | | | | | | | DV0P225 | |
| | | | 5000 | MDME502□1∗ | 85 | MFD◇TB3A2 | MFD◇TB3A2E | | Approx. 7.5 | | | | | | | | — Note) 8 | |
| | | | 7500 | MDME752□1∗ | 86 | MGD◇TC3B4 | — | G-frame | Approx. 11 | | | | — Note) 6 | — Note) 6 | | DV0P4285 ×3 in parallel | | Recommended components P.252 |
| | | | 11000 | MDMEC12□1∗ | 87 | MHD◇TC3B4 | | H-frame | Approx. 17 | | | | | | | DV0PM20058 | | |
| | | | 15000 | MDMEC52□1∗ | 88 | MHD◇TC3B4 | | | Approx. 22 | | | | | | | | | |
| | | 3-phase 400 V | 400 | MDME044□1∗ | 111 | MDD◇T2407 | MDD◇T2407E | D-frame | Approx. 0.9 | MFECA 0**0ETD | MFECA 0**0ETE | | MFMCD 0**2ECD | MFMCE 0**2FCD | — | DV0PM20048 | — Note) 8 | Recommended components P.252 |
| | | | 600 | MDME064□1∗ | 112 | | | | Approx. 1.2 | | | | | | | | | |
| | | | 1000 | MDME104□1∗ | 113 | MDD◇T2412 | MDD◇T2412E | | Approx. 1.8 | | | | | | | | | |
| | | | 1500 | MDME154□1∗ | 114 | MDD◇T3420 | MDD◇T3420E | | Approx. 2.3 | | | | | | | | | |
| | | | 2000 | MDME204□1∗ | 115 | MED◇T4430 | MED◇T4430E | E-frame | Approx. 3.3 | | | | | | | DV0PM20049 | | |
| | | | 3000 | MDME304□1∗ | 116 | MFD◇T5440 | MFD◇T5440E | F-frame | Approx. 4.5 | | | | MFMCA 0**3ECT | MFMCA 0**3FCT | | DV0PM20049 ×2 in parallel | | |
| | | | 4000 | MDME404□1∗ | 117 | MFD◇TA464 | MFD◇TA464E | | Approx. 6 | | | | | | | | | |
| | | | 5000 | MDME504□1∗ | 118 | MFD◇TA464 | MFD◇TA464E | | Approx. 7.5 | | | | | | | | | |
| | | | 7500 | MDME754□1∗ | 119 | MGD◇TB4A2 | — | G-frame | Approx. 11 | | | | — Note) 6 | — Note) 6 | | DV0PM20049 ×3 in parallel | | |
| | | | 11000 | MDMEC14□1∗ | 120 | MHD◇TB4A2 | | H-frame | Approx. 17 | | | | | | | DV0PM20059 | | |
| | | | 15000 | MDMEC54□1∗ | 121 | MHD◇TB4A2 | | | Approx. 22 | | | | | | | | | |
| | MFME (Flat type) 2000 r/min | Single phase/ 3-phase 200 V | 1500 | MFME152□1∗ | 89 | MDD◇T5540 | MDD◇T5540E | D-frame | Approx. 2.3 | MFECA 0**0ETD | MFECA 0**0ETE | | MFMCA 0**2ECD | MFMCA 0**2FCD | — | DV0P4284 | DV0PM20047 / DV0P222 | DV0P4220 |
| | | 3-phase 200 V | 2500 | MFME252□1∗ | 90 | MED◇T7364 | MED◇T7364E | E-frame | Approx. 3.8 | | | | MFMCF 0**2ECD | MFMCE 0**2FCD | | DV0P4285 Note) 7 | DV0P224 | DV0PM20043 |
| | | | 4500 | MFME452□1∗ | 91 | MFD◇TB3A2 | MFD◇TB3A2E | F-frame | Approx. 6.8 | | | | MFMCD 0**3ECT | MFMCA 0**3FCT | | DV0P4285 ×2 in parallel | — Note) 8 | DV0P3410 |
| | | 3-phase 400 V | 1500 | MFME154□1∗ | 122 | MDD◇T3420 | MDD◇T3420E | D-frame | Approx. 2.3 | MFECA 0**0ETD | MFECA 0**0ETE | | MFMCF 0**2ECD | MFMCE 0**2FCD | — | DV0PM20048 | — Note) 8 | Recommended components P.252 |
| | | | 2500 | MFME254□1∗ | 123 | MED◇T4430 | MED◇T4430E | E-frame | Approx. 3.8 | | | | | | | DV0PM20049 | | |
| | | | 4500 | MFME454□1∗ | 124 | MFD◇TA464 | MFD◇TA464E | F-frame | Approx. 6.8 | | | | MFMCD 0**3ECT | MFMCA 0**3FCT | | DV0PM20049 ×2 in parallel | | |

Note) 1 Rotary encoder specifications: □ Motor specification: ∗ (refer to P.16)
Note) 2 ◇ : Drivers series K: A5II series H: A5 series Note) 3 ◇ : Drivers series K: A5IIE series H: A5E series
Note) 4 Because A5IIE, A5E series drivers (dedicated for position control) do not support the 17-bit absolute specification, only 20-bit incremental type can be used in combination.
Note) 5 Cable length: ** (03: 3 m, 05: 5 m, 10: 10 m, 20: 20 m), (Example. 3 m: MFECA0030EAM)

Note) 6 Recommend to get the connector kit of options.
Note) 7 Other combinations exist, and refer to P.210 for details.
Note) 8 Reactor should be prepared by the user.
Note) 9 Please note that a battery is not supplied together with 17-bit absolute encoder cable (with battery box).
Please buy the battery part number "DV0P2990" separately.

## • Options (IP67 motor)

| Title | | | Part No. | Page |
|---|---|---|---|---|
| Interface Cable | | | DV0P4360 | 197 |
| Interface Conversion Cable | | | DV0P4120 | |
| | | | DV0P4121 | |
| | | | DV0P4130 | |
| | | | DV0P4131 | |
| | | | DV0P4132 | |
| Connector Kit for Power Supply Input Connection | A-frame to D-frame | Single row type | DV0PM20032 | 200 |
| | | Double row type | DV0PM20033 | |
| | E-frame (200 V) | | DV0PM20044 | |
| | D-frame (400 V) | | DV0PM20051 | |
| | E-frame (400 V) | | DV0PM20052 | |
| Connector Kit for Control Power Supply Input Connection | D-frame and E-frame (400 V) | | DV0PM20053 | 201 |
| Connector Kit for Motor Connection | A-frame to D-frame | | DV0PM20034 | |
| | E-frame (200 V) | | DV0PM20046 | |
| | D-frame (400 V) | | DV0PM20054 | |
| Connector Kit for Regenerative Resistor | E-frame | | DV0PM20045 | |
| | D-frame (400 V) | | DV0PM20055 | |
| Connector Kit for Motor/Encoder Connection | | | DV0PM20036 | 203 |
| | | | DV0PM20037 | 204 |
| | | | DV0PM20038 | |
| | | | DV0PM20039 | 205 |
| Connector Kit | RS485, RS232 | | DV0PM20024 | 198 |
| | Safety | | DV0PM20025 | |
| | Interface | | DV0P4350 | |
| | External Scale | | DV0PM20026 | 199 |
| | Encoder | | DV0PM20010 | |
| | Analog Monitor Signal | | DV0PM20031 | |
| Battery For Absolute Encoder | | | DV0P2990 | 207 |
| Battery Box Note) 9 | | | DV0P4430 | |
| Mounting Bracket | D-frame | | DV0PM20030 | 208 |
| Encoder Cable | without Battery Box | | MFECA0**0ETD | 190 |
| | with Battery Box Note) 9 | | MFECA0**0ETE | |
| Motor Cable | without Brake | | MFMCA0**2ECD | 191 |
| | | | MFMCD0**2ECD | 192 |
| | | | MFMCE0**2ECD | |
| | | | MFMCF0**2ECD | |
| | | | MFMCA0**3ECT | 193 |
| | | | MFMCD0**3ECT | |
| | with Brake | | MFMCA0**2FCD | 194 |
| | | | MFMCE0**2FCD | |
| | | | MFMCA0**3FCT | 195 |
| External Regenerative Resistor | 50 Ω 25 W | | DV0P4280 | 210 |
| | 100 Ω 25 W | | DV0P4281 | |
| | 25 Ω 50 W | | DV0P4282 | |
| | 50 Ω 50 W | | DV0P4283 | |
| | 30 Ω 100 W | | DV0P4284 | |
| | 20 Ω 130 W | | DV0P4285 | |
| | 120 Ω 80 W | | DV0PM20048 | |
| | 80 Ω 190 W | | DV0PM20049 | |
| Reactor | DV0P220, DV0P221, DV0P222, DV0P223, DV0P224, DV0P225, DV0P227, DV0P228, DV0PM20047 | | | 209 |
| Noise Filter | DV0P4170, DV0PM20042 DV0P4220, DV0PM20043 | | | 250 |
| | DV0P3410 | | | 251 |
| Surge Absorber | Single phase | | DV0P4190 | 253 |
| | 3-phase (200V) | | DV0P1450 | |
| | 3-phase (400V) | | DV0PM20050 | |
| Noise Filter for Signal Lines | | | DV0P1460 | 254 |

# 0.9 kW to 7.5 kW IP67 motor (MGME / MHME)

| Motor | | | | | | Driver | | | Power capacity (at rated load) (kVA) | Optional parts | | | | | | | | |
|---|---|---|---|---|---|---|---|---|---|---|---|---|---|---|---|---|---|---|
| Motor series | | Power supply | Output (W) | Part No. Note) 1 | Rating/ Spec. (page) | A5Ⅱ series A5 series Part No. (Speed, Position, Torque, Full-Closed type) Note) 2 | A5ⅡE series A5E series Part No. (Position control type) Note) 3,4 | Frame | | Encoder Cable: 20-bit Incremental Note) 5 | Encoder Cable: 17-bit Absolute Note) 4,5,9 | | Motor Cable: without Brake Note) 5 | Motor Cable: with Brake Note) 5 | Brake Cable Note) 5 | External Regenerative Resistor | Reactor (Single phase / 3-phase) | Noise Filter |
| Middle inertia | MGME (Low speed/ High torque type) 1000 r/min | Single phase/ 3-phase 200 V | 900 | MGME092□1＊ | 92 | MDD◇T5540 | MDD◇T5540E | D-frame | Approx. 1.8 | MFECA 0**0ETD | MFECA 0**0ETE | | MFMCD 0**2ECD | MFMCA 0**2FCD | — | DV0P4284 | DV0P228 / DV0P221 | DV0P4220 |
| | | 3-phase 200 V | 2000 | MGME202□1＊ | 93 | MFD◇TA390 | MFD◇TA390E | F-frame | Approx. 3.8 | | | | MFMCA 0**3ECT | MFMCA 0**3FCT | | DV0P4285 ×2 in parallel | DV0P223 | DV0P3410 |
| | | | 3000 | MGME302□1＊ | 94 | MFD◇TB3A2 | MFD◇TB3A2E | | Approx. 4.5 | | | | | | | | DV0P224 | |
| | | | 4500 | MGME452□1＊ | 95 | MFD◇TB3A2 | MFD◇TB3A2E | | Approx. 7.5 | | | | | | | | — Note) 7 | |
| | | | 6000 | MGME602□1＊ | 96 | MGD◇TC3B4 | — | G-frame | Approx. 9.0 | | | | — Note) 6 | — Note) 6 | | DV0P4285 ×3 in parallel | | Recommended components P.252 |
| | | 3-phase 400 V | 900 | MGME094□1＊ | 125 | MDD◇T3420 | MDD◇T3420E | D-frame | Approx. 1.8 | MFECA 0**0ETD | MFECA 0**0ETE | | MFMCD 0**2ECD | MFMCE 0**2FCD | — | DV0PM20048 | — Note) 7 | Recommended components P.252 |
| | | | 2000 | MGME204□1＊ | 126 | MFD◇T5440 | MFD◇T5440E | F-frame | Approx. 3.8 | | | | MFMCA 0**3ECT | MFMCA 0**3FCT | | DV0PM20049 ×2 in parallel | | |
| | | | 3000 | MGME304□1＊ | 127 | MFD◇TA464 | MFD◇TA464E | | Approx. 4.5 | | | | | | | | | |
| | | | 4500 | MGME454□1＊ | 128 | MFD◇TA464 | MFD◇TA464E | | Approx. 7.5 | | | | | | | | | |
| | | | 6000 | MGME604□1＊ | 129 | MGD◇TB4A2 | — | G-frame | Approx. 9.0 | | | | — Note) 6 | — Note) 6 | | DV0PM20049 ×3 in parallel | | |
| High inertia | MHME 2000 r/min | Single phase/ 3-phase 200 V | 1000 | MHME102□1＊ | 97 | MDD◇T3530 | MDD◇T3530E | D-frame | Approx. 1.8 | MFECA 0**0ETD | MFECA 0**0ETE | | MFMCD 0**2ECD | MFMCA 0**2FCD | — | DV0P4284 | DV0P228 / DV0P222 | DV0P4220 |
| | | | 1500 | MHME152□1＊ | 98 | MDD◇T5540 | MDD◇T5540E | | Approx. 2.3 | | | | | | | | DV0PM20047 / DV0P222 | |
| | | 3-phase 200 V | 2000 | MHME202□1＊ | 99 | MED◇T7364 | MED◇T7364E | E-frame | Approx. 3.3 | | | | MFMCE 0**2ECD | MFMCE 0**2FCD | | DV0P4285 Note) 8 | DV0P223 | DV0PM20043 |
| | | | 3000 | MHME302□1＊ | 100 | MFD◇TA390 | MFD◇TA390E | F-frame | Approx. 4.5 | | | | MFMCA 0**3ECT | MFMCA 0**3FCT | | DV0P4285 ×2 in parallel | DV0P224 | DV0P3410 |
| | | | 4000 | MHME402□1＊ | 101 | MFD◇TB3A2 | MFD◇TB3A2E | | Approx. 6 | | | | | | | | DV0P225 | |
| | | | 5000 | MHME502□1＊ | 102 | MFD◇TB3A2 | MFD◇TB3A2E | | Approx. 7.5 | | | | | | | | — Note) 7 | |
| | | | 7500 | MHME752□1＊ | 103 | MGD◇TC3B4 | — | G-frame | Approx. 11 | | | | — Note) 6 | — Note) 6 | | DV0P4285 ×3 in parallel | | Recommended components P.252 |
| | | 3-phase 400 V | 1000 | MHME104□1＊ | 130 | MDD◇T2412 | MDD◇T2412E | D-frame | Approx. 1.8 | MFECA 0**0ETD | MFECA 0**0ETE | | MFMCD 0**2ECD | MFMCE 0**2FCD | — | DV0PM20048 | — Note) 7 | Recommended components P.252 |
| | | | 1500 | MHME154□1＊ | 131 | MDD◇T3420 | MDD◇T3420E | | Approx. 2.3 | | | | | | | | | |
| | | | 2000 | MHME204□1＊ | 132 | MED◇T4430 | MED◇T4430E | E-frame | Approx. 3.3 | | | | MFMCE 0**2ECD | | | DV0PM20049 | | |
| | | | 3000 | MHME304□1＊ | 133 | MFD◇T5440 | MFD◇T5440E | F-frame | Approx. 4.5 | | | | MFMCA 0**3ECT | MFMCA 0**3FCT | | DV0PM20049 ×2 in parallel | | |
| | | | 4000 | MHME404□1＊ | 134 | MFD◇TA464 | MFD◇TA464E | | Approx. 6 | | | | | | | | | |
| | | | 5000 | MHME504□1＊ | 135 | MFD◇TA464 | MFD◇TA464E | | Approx. 7.5 | | | | | | | | | |
| | | | 7500 | MHME754□1＊ | 136 | MGD◇TB4A2 | — | G-frame | Approx. 9.0 | | | | — Note) 6 | — Note) 6 | | DV0PM20049 ×3 in parallel | | |

Note) 1 Rotary encoder specifications: □ Motor specification: ＊ (refer to P.16)
Note) 2 ◇ : Drivers series K: A5Ⅱ series H: A5 series
Note) 3 ◇ : Drivers series K: A5ⅡE series H: A5E series
Note) 4 Because A5ⅡE, A5E series drivers (dedicated for position control) do not support the 17-bit absolute specification, only 20-bit incremental type can be used in combination.
Note) 5 Cable length: ** (03: 3 m, 05: 5 m, 10: 10 m, 20: 20 m), (Example. 3 m: MFECA0030EAM)
Note) 6 Recommend to get the connector kit of options.
Note) 7 Reactor should be prepared by the user.
Note) 8 Other combinations exist, and refer to P.210 for details.
Note) 9 Please note that a battery is not supplied together with 17-bit absolute encoder cable (with battery box). Please buy the battery part number "DV0P2990" separately.



## • Options (IP67 motor)

| Title | | | Part No. | Page |
|---|---|---|---|---|
| Interface Cable | | | DV0P4360 | 197 |
| Interface Conversion Cable | | | DV0P4120 | |
| | | | DV0P4121 | |
| | | | DV0P4130 | |
| | | | DV0P4131 | |
| | | | DV0P4132 | |
| Connector Kit for Power Supply Input Connection | A-frame to D-frame | Single row type | DV0PM20032 | 200 |
| | | Double row type | DV0PM20033 | |
| | E-frame (200 V) | | DV0PM20044 | |
| | D-frame (400 V) | | DV0PM20051 | |
| | E-frame (400 V) | | DV0PM20052 | |
| Connector Kit for Control Power Supply Input Connection | D-frame and E-frame (400 V) | | DV0PM20053 | 201 |
| Connector Kit for Motor Connection | A-frame to D-frame | | DV0PM20034 | |
| | E-frame (200 V) | | DV0PM20046 | |
| | D-frame (400 V) | | DV0PM20054 | |
| Connector Kit for Regenerative Resistor | E-frame | | DV0PM20045 | |
| | D-frame (400 V) | | DV0PM20055 | |
| Connector Kit for Motor/Encoder Connection | | | DV0PM20036 | 203 |
| | | | DV0PM20037 | 204 |
| | | | DV0PM20038 | |
| | | | DV0PM20039 | 205 |
| Connector Kit | RS485, RS232 | | DV0PM20024 | 198 |
| | Safety | | DV0PM20025 | |
| | Interface | | DV0P4350 | |
| | External Scale | | DV0PM20026 | 199 |
| | Encoder | | DV0PM20010 | |
| | Analog Monitor Signal | | DV0PM20031 | |
| Battery For Absolute Encoder | | | DV0P2990 | 207 |
| Battery Box Note) 9 | | | DV0P4430 | |
| Mounting Bracket | D-frame | | DV0PM20030 | 208 |
| Encoder Cable | without Battery Box | | MFECA0**0ETD | 190 |
| | with Battery Box Note) 9 | | MFECA0**0ETE | |
| Motor Cable | without Brake | | MFMCA0**2ECD | 191 |
| | | | MFMCD0**2ECD | 192 |
| | | | MFMCE0**2ECD | |
| | | | MFMCF0**2ECD | |
| | | | MFMCA0**3ECT | 193 |
| | | | MFMCD0**3ECT | |
| | with Brake | | MFMCA0**2FCD | 194 |
| | | | MFMCE0**2FCD | |
| | | | MFMCA0**3FCT | 195 |
| External Regenerative Resistor | 50 Ω 25 W | | DV0P4280 | 210 |
| | 100 Ω 25 W | | DV0P4281 | |
| | 25 Ω 50 W | | DV0P4282 | |
| | 50 Ω 50 W | | DV0P4283 | |
| | 30 Ω 100 W | | DV0P4284 | |
| | 20 Ω 130 W | | DV0P4285 | |
| | 120 Ω 80 W | | DV0PM20048 | |
| | 80 Ω 190 W | | DV0PM20049 | |
| Reactor | DV0P220, DV0P221, DV0P222, DV0P223, DV0P224, DV0P225, DV0P227, DV0P228, DV0PM20047 | | | 209 |
| Noise Filter | DV0P4170, DV0PM20042 DV0P4220, DV0PM20043 | | | 250 |
| | DV0P3410 | | | 251 |
| Surge Absorber | Single phase | | DV0P4190 | 253 |
| | 3-phase (200 V) | | DV0P1450 | |
| | 3-phase (400 V) | | DV0PM20050 | |
| Noise Filter for Signal Lines | | | DV0P1460 | 254 |

# A5Ⅱ, A5 series (Speed, Position, Torque, Full-Closed type)

| | | | | | |
|---|---|---|---|---|---|
| Basic Specifications | Input power | 100 V | Main circuit | | Single phase, 100 V to 120 V +10 % –15 % 50 Hz/60 Hz |
| | | | Control circuit | | Single phase, 100 V to 120 V +10 % –15 % 50 Hz/60 Hz |
| | | 200 V | Main circuit | A-frame to D-frame | Single/3-phase, 200 V to 240 V +10 % –15 % 50 Hz/60 Hz |
| | | | | E-frame to H-frame | 3-phase, 200 V to 230 V +10 % –15 % 50 Hz/60 Hz |
| | | | Control circuit | A-frame to D-frame | Single phase, 200 V to 240 V +10 % –15 % 50 Hz/60 Hz |
| | | | | E-frame to H-frame | Single phase, 200 V to 230 V +10 % –15 % 50 Hz/60 Hz |
| | | 400 V | Main circuit | D-frame to H-frame | 3-phase, 380 V to 480 V +10 % –15 % 50 Hz/60 Hz |
| | | | Control circuit | D-frame to H-frame | DC 24 V ± 15 % |
| | Environment | | temperature | | Ambient temperature: 0 ˚C to 55 ˚C (free from freezing)<br>Storage temperature: –20 ˚C to 65 ˚C<br>(Max.temperature guarantee: 80 ˚C for 72 hours free from condensation*1) |
| | | | humidity | | Both operating and storage : 20 % to 85 %RH (free from condensation*1) |
| | | | Altitude | | Lower than 1000 m |
| | | | Vibration | | 5.88 m/s$^2$ or less, 10 Hz to 60 Hz (No continuous use at resonance frequency) |
| | Control method | | | | IGBT PWM Sinusoidal wave drive |
| | Encoder feedback | | | | 17-bit (131072 resolution) absolute encoder, 7-wire serial<br>20-bit (1048576 resolution) incremental encoder, 5-wire serial |
| | Feedback scale feedback | | | A/B phase | A/B phase, initialization signal defferential input. |
| | | | | serial | Manufacturers that support serial communication scale:<br>DR. JOHANNES HEIDENHAIN GmbH Fagor Automation S.Coop.<br>Magnescale Co., Ltd. Mitutoyo Corporation Nidec Sankyo Corporation<br>Renishaw plc |
| | Parallel I/O connector | Control signal | | Input | General purpose 10 inputs<br>The function of general-purpose input is selected by parameters. |
| | | | | Output | General purpose 6 outputs<br>The function of general-purpose output is selected by parameters. |
| | | Analog signal | | Input | 3 inputs (16Bit A/D : 1 input, 12Bit A/D : 2 inputs) |
| | | | | Output | 2 outputs (Analog monitor: 2 output) |
| | | Pulse signal | | Input | 2 inputs (Photo-coupler input, Line receiver input) |
| | | | | Output | 4 outputs ( Line driver: 3 output、open collector: 1 output) |
| | Communication function | | | USB | Connection with PC etc. |
| | | | | RS232 | 1 : 1 communication |
| | | | | RS485 | 1 : n communication up to 31 axes to a host. |
| | Safety function | | | | Used for functional safety. |
| | Front panel | | | | (1) 5 keys (2) LED (6-digit)<br>(3) Connector for monitor (Analog monitor output (2ch), Digital monitor output (1ch)) |
| | Regeneration | | | | A, B, G and H-frame:<br>no built-in regenerative resistor (external resistor only)<br>C-frame to F-frame:<br>Built-in regenerative resistor (external resistor is also enabled.) |
| | Dynamic brake | | | | A-frame to G-frame: Built-in (external resistor is also available to G-frame)<br>H-frame: External only |
| | Control mode | | | | Switching among the following 7 mode is enabled,<br>(1) Position control (2) Speed control (3) Toque control<br>(4) Position/Speed control (5) Position/Torque control<br>(6) Speed/Torque control (7) Full-closed control |

*1 Air containing water vapor will become saturated with water vapor as the temperature falls, causing dew.
*2 Not applicable to 2DOF control system.



| | | | |
|---|---|---|---|
| Function | Position control | Control input | (1) Deviation counter clear (2) Command pulse inhibitation<br>(3) Electric gear (4) Damping control switching etc. |
| | | Control output | Positioning complete (In-position) etc. |
| | | Pulse input: Max. command pulse frequency | Exclusive interface for Photo-coupler: 500 kpps<br>Exclusive interface for line driver : 4 Mpps |
| | | Pulse input: Input pulse signal format | Differential input<br>((1) Positive and Negative direction, (2) A and B-phase, (3) Command and direction) |
| | | Pulse input: Electronic gear (Division/Multiplication of command pulse) | 1/1000 times to 1000 times |
| | | Pulse input: Smoothing filter | Primary delay filter or FIR type filter is adaptable to the command input |
| | | Analog input: Torque limit command input | Individual torque limit for both positive and negative direction is enabled. |
| | | Analog input: Torque feed forward input | Analog voltage can be used as torque feed forward input. |
| | | Instantaneous Speed Observer | Available |
| | | Damping Control | Available |
| | | 2DOF settings | Only available at A5Ⅱ Series |
| | Speed control | Control input | (1) Selection of internal velocity setup 1 (2) Selection of internal velocity setup 2<br>(3) Selection of internal velocity setup 3 (4) Speed zero clamp etc. |
| | | Control output | Speed arrival etc. |
| | | Analog input: Velocity command input | Speed command input can be provided by means of analog voltage.<br>Parameters are used for scale setting and command polarity.<br>(6 V/Rated rotational speed Default) |
| | | Analog input: Torque limit command input | Individual torque limit for both positive and negative direction is enabled. |
| | | Analog input: Torque feed forward input | Analog voltage can be used as torque feed forward input. |
| | | Internal velocity command | Switching the internal 8speed is enabled by command input. |
| | | Soft-start/down function | Individual setup of acceleration and deceleration is enabled, with 0 s to 10 s/1000 r/min. Sigmoid acceleration/deceleration is also enabled. |
| | | Zero-speed clamp | Speed zero clamp input is enabled. |
| | | Instantaneous Speed Observer | Available |
| | | Speed Control filter | Available |
| | | 2DOF settings | Only available at A5Ⅱ Series |
| | Torque control*2 | Control input | Speed zero clamp, Torque command sign input etc. |
| | | Control output | Speed arrival etc. |
| | | Analog input: Torque command input | Speed command input can be provided by means of analog voltage.<br>Parameters are used for scale setting and command polarity. (3 V/rated torque Default) |
| | | Speed limit function | Speed limit value with parameter is enabled. |
| | Full-closed control*2 | Control input | (1) Deviation counter clear (2) Command pulse inhibition<br>(3) Command dividing gradual increase switching (4) Damping control switching etc. |
| | | Control output | Full-closed positioning complete etc. |
| | | Pulse input: Max. command pulse frequency | Exclusive interface for Photo-coupler: 500 kpps<br>Exclusive interface for line driver : 4 Mpps |
| | | Pulse input: Input pulse signal format | Differential input |
| | | Pulse input: Electronic gear (Division/Multiplication of command pulse) | 1/1000 times to 1000 times |
| | | Pulse input: Smoothing filter | Primary delay filter or FIR type filter is adaptable to the command input |
| | | Analog input: Torque limit command input | Individual torque limit for both positive and negative direction is enabled. |
| | | Analog input: Torque feed forward input | Analog voltage can be used as torque feed forward input. |
| | | Setup range of division/multiplication of feedback scale | 1/40 times to 160 times |
| | | Damping Control | Available |
| | Common | Auto tuning | The load inertia is identified in real time by the driving state of the motor operating according to the command given by the controlling device and set up support software “PANATERM”. The gain is set automatically in accordance with the rigidity setting. |
| | | Division of encoder feedback pulse | Set up of any value is enabled (encoder pulses count is the max.). |
| | | Protective function: Hard error | Over-voltage, under-voltage, over-speed, over-load,<br>over-heat, over-current and encoder error etc. |
| | | Protective function: Soft error | Excess position deviation, command pulse division error, EEPROM error etc. |
| | | Traceability of alarm data | The alarm data history can be referred to. |

# A5ⅡE, A5E series (Position control type)

| | | | | | |
|---|---|---|---|---|---|
| Basic Specifications | Input power | 100 V | Main circuit | | Single phase, 100 V to 120 V +10 % –15 % 50 Hz/60 Hz |
| | | | Control circuit | | Single phase, 100 V to 120 V +10 % –15 % 50 Hz/60 Hz |
| | | 200 V | Main circuit | A-frame to D-frame | Single/3-phase, 200 V to 240 V +10 % –15 % 50 Hz/60 Hz |
| | | | | E-frame to F-frame | 3-phase, 200 V to 230 V +10 % –15 % 50 Hz/60 Hz |
| | | | Control circuit | A-frame to D-frame | Single phase, 200 V to 240 V +10 % –15 % 50 Hz/60 Hz |
| | | | | E-frame to F-frame | Single phase, 200 V to 230 V +10 % –15 % 50 Hz/60 Hz |
| | | 400 V | Main circuit | D-frame to F-frame | 3-phase, 380 V to 480 V +10 % –15 % 50 Hz/60 Hz |
| | | | Control circuit | D-frame to F-frame | DC 24 V ± 15 % |
| | Environment | | temperature | | Ambient temperature: 0 ˚C to 50 ˚C (free from freezing)<br>Storage temperature: –20 ˚C to 65 ˚C<br>(Max.temperature guarantee: 80 ˚C for 72 hours free from condensation*1) |
| | | | humidity | | Both operating and storage : 20 % to 85 %RH (free from condensation*1) |
| | | | Altitude | | Lower than 1000 m |
| | | | Vibration | | 5.88 m/s² or less, 10 Hz to 60 Hz (No continuous use at resonance frequency) |
| | Control method | | | | IGBT PWM Sinusoidal wave drive |
| | Encoder feedback | | | | 20-bit (1048576 resolution) incremental encoder, 5-wire serial |
| | Parallel I/O connector | Control signal | | Input | General purpose 10 inputs<br>The function of general-purpose input is selected by parameters. |
| | | | | Output | General purpose 6 outputs<br>The function of general-purpose output is selected by parameters. |
| | | Analog signal | | Input | none |
| | | | | Output | 2 outputs (Analog monitor: 2 output) |
| | | Pulse signal | | Input | 2 inputs (Photo-coupler input, Line receiver input) |
| | | | | Output | 4 outputs ( Line driver: 3 output、open collector: 1 output) |
| | Communication function | | | USB | Connection with PC etc. |
| | Front panel | | | | (1) 5 keys (2) LED (6-digit) (3) Analog monitor output (2ch) |
| | Regeneration | | | | A, B-frame: no built-in regenerative resistor (external resistor only)<br>C-fram to F-frame: Built-in regenerative resistor (external resistor is also enabled.) |
| | Dynamic brake | | | | Built-in |
| | Control mode | | | | (1) Position control (2) Internal velocity control (3) Position/ Internal velocity control |

*1 Air containing water vapor will become saturated with water vapor as the temperature falls, causing dew.



| | | | | |
|---|---|---|---|---|
| Function | Position control | Control input | | (1) Deviation counter clear (2) Command pulse inhibitation<br>(3) Electric gear (4) Damping control switching etc. |
| | | Control output | | Positioning complete (In-position) etc. |
| | | Pulse input | Max. command pulse frequency | Exclusive interface for Photo-coupler: 500 kpps<br>Exclusive interface for line driver : 4 Mpps |
| | | | Input pulse signal format | Differential input<br>((1) Positive and Negative direction, (2) A and B-phase, (3) Command and direction) |
| | | | Electronic gear (Division/ Multiplication of command pulse) | 1/1000 times to 1000 times |
| | | | Smoothing filter | Primary delay filter or FIR type filter is adaptable to the command input |
| | | Instantaneous Speed Observer | | Available |
| | | Damping Control | | Available |
| | | 2DOF settings | | Only available at A5ⅡE Series |
| | Common | Auto tuning | | The load inertia is identified in real time by the driving state of the motor operating according to the command given by the controlling device and set up support software “PANATERM”.<br>The gain is set automatically in accordance with the rigidity setting. |
| | | Division of encoder feedback pulse | | Set up of any value is enabled (encoder pulses count is the max.). |
| | | Protective function | Hard error | Over-voltage, under-voltage, over-speed, over-load,<br>over-heat, over-current and encoder error etc. |
| | | | Soft error | Excess position deviation, command pulse division error, EEPROM error etc. |
| | | Traceability of alarm data | | The alarm data history can be referred to. |

# Wiring to Connector, XA, XB, XC, XD and Terminal Block

## In Case of Single phase, A-frame to D-frame, 100 V / 200 V type

### • In Case of MSMD, MHMD

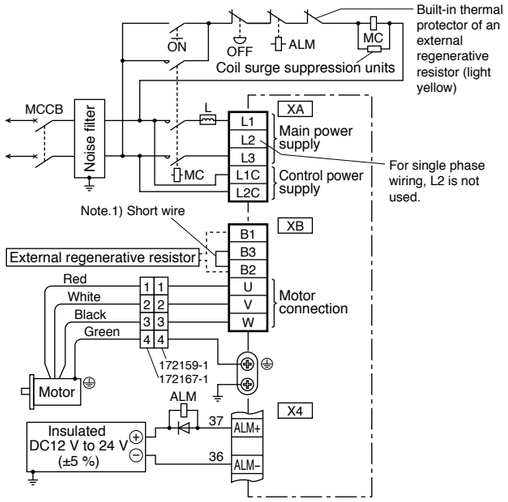


Note.1)

| Frame No. | Short wire (Accessory) | Built-in regenerative resistor | Connection of the connector XB | |
|---|---|---|---|---|
| | | | In case of using an external regenerative resistor. | In case of not using an external regenerative resistor. |
| A-frame B-frame | without | without | • Always open between B2-B3<br>• Connect an external regenerative resistor between B1-B2 | • Always open between B2-B3 |
| C-frame D-frame | with | with | • Remove the short wire accessory from between B2-B3.<br>• Connect an external regenerative resistor between B1-B2 | • Shorted between B2-B3 with an attached short wire |

### • In Case of MSME

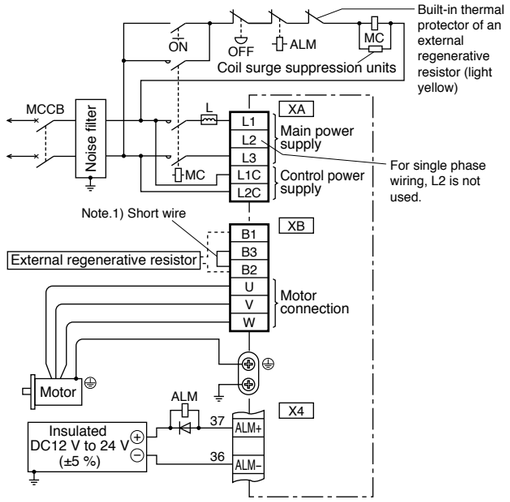


Note.1)

| Frame No. | Short wire (Accessory) | Built-in regenerative resistor | Connection of the connector XB | |
|---|---|---|---|---|
| | | | In case of using an external regenerative resistor. | In case of not using an external regenerative resistor. |
| A-frame B-frame | without | without | • Always open between B2-B3<br>• Connect an external regenerative resistor between B1-B2 | • Always open between B2-B3 |
| C-frame D-frame | with | with | • Remove the short wire accessory from between B2-B3.<br>• Connect an external regenerative resistor between B1-B2 | • Shorted between B2-B3 with an attached short wire |

## In Case of 3-phase, A-frame to D-frame, 200 V type

### • In Case of MSMD, MHMD

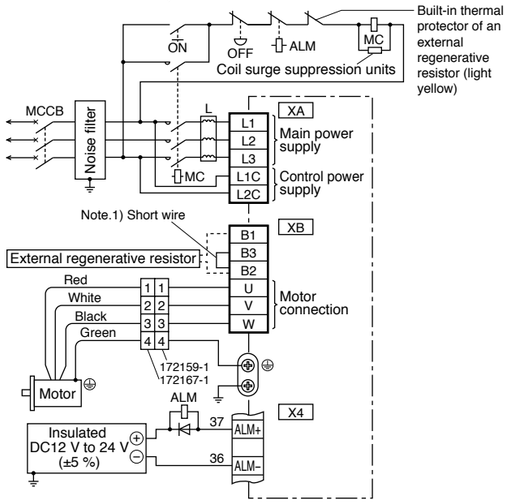


Note.1)

| Frame No. | Short wire (Accessory) | Built-in regenerative resistor | Connection of the connector XB | |
|---|---|---|---|---|
| | | | In case of using an external regenerative resistor. | In case of not using an external regenerative resistor. |
| A-frame B-frame | without | without | • Always open between B2-B3<br>• Connect an external regenerative resistor between B1-B2 | • Always open between B2-B3 |
| C-frame D-frame | with | with | • Remove the short wire accessory from between B2-B3.<br>• Connect an external regenerative resistor between B1-B2 | • Shorted between B2-B3 with an attached short wire |

### • In Case of MSME

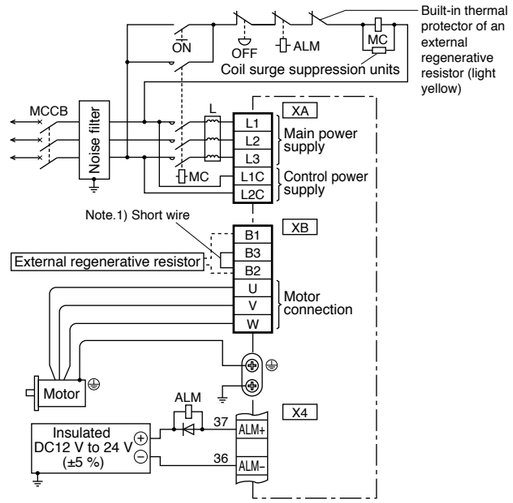


Note.1)

| Frame No. | Short wire (Accessory) | Built-in regenerative resistor | Connection of the connector XB | |
|---|---|---|---|---|
| | | | In case of using an external regenerative resistor. | In case of not using an external regenerative resistor. |
| A-frame B-frame | without | without | • Always open between B2-B3<br>• Connect an external regenerative resistor between B1-B2 | • Always open between B2-B3 |
| C-frame D-frame | with | with | • Remove the short wire accessory from between B2-B3.<br>• Connect an external regenerative resistor between B1-B2 | • Shorted between B2-B3 with an attached short wire |

* Refer to P.186, P.187, Specifications of Motor connector.



## In Case of 3-phase, E-frame, 200 V type

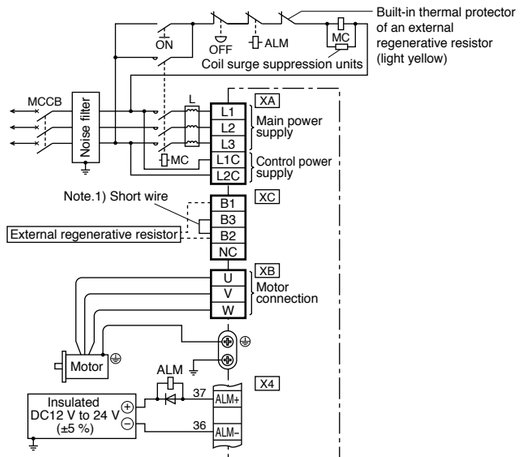


Note.1)

| Frame No. | Short wire (Accessory) | Built-in regenerative resistor | Connection of the connector XC | |
|---|---|---|---|---|
| | | | In case of using an external regenerative resistor. | In case of not using an external regenerative resistor. |
| E-frame | with | with | • Remove the short wire accessory from between B2-B3.<br>• Connect an external regenerative resistor between B1-B2 | • Shorted between B2-B3 with an attached short wire |

## In Case of 3-phase, F-frame, 200 V type

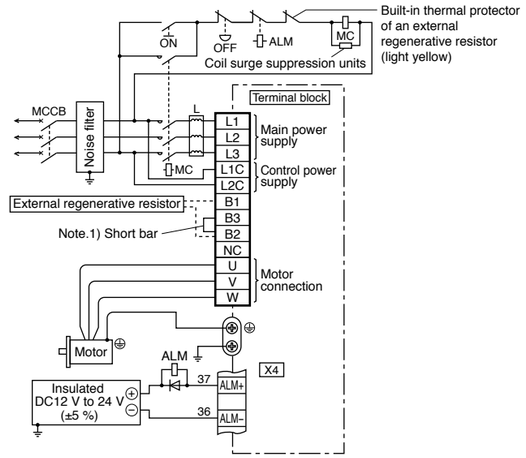


Note.1)

| Frame No. | Short bar (Accessory) | Built-in regenerative resistor | Connection of terminal block | |
|---|---|---|---|---|
| | | | In case of using an external regenerative resistor. | In case of not using an external regenerative resistor. |
| F-frame | with | with | • Remove the short bar accessory from between B2-B3.<br>• Connect an external regenerative resistor between B1-B2 | • Shorted between B2-B3 with an attached short bar |

## In Case of 3-phase, G-frame, 200 V type

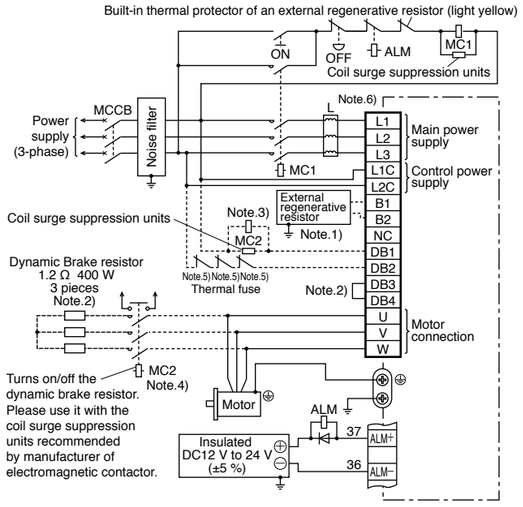


Note.1) About regenerative resistor

| Frame No. | Short bar (Accessory) | Built-in regenerative resistor | Connection of terminal block | |
|---|---|---|---|---|
| | | | In case of using an external regenerative resistor. | In case of not using an external regenerative resistor. |
| G-frame | without | without | • Connect an external regenerative resistor between B1-B2 | • Open between B1-B2 |

Note.2) About dynamic brake resistor

| Frame No. | Short bar (Accessory) | Built-in dynamic brake resistor. | Connection of terminal block | |
|---|---|---|---|---|
| | | | In case of using an external dynamic brake resistor. | In case of not using an external dynamic brake resistor. |
| G-frame | with | with | • Remove attached short bar between DB3-DB4.<br>• Connect external dynamic brake resistor as shown above. | • Shorted with attached short bar between DB3-DB4<br>• Open between DB1-DB2 |

## In Case of 3-phase, H-frame, 200 V type

Note 1) Built-in thermal protector of an external regenerative resistor (T1 and T2 terminals)

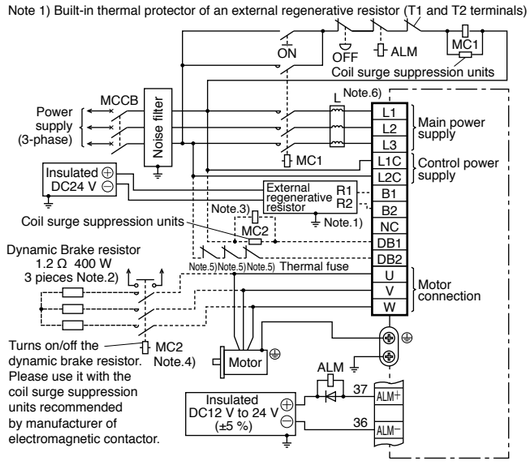


Note.1) About regenerative resistor

| Frame No. | Short bar (Accessory) | Built-in regenerative resistor | Connection of terminal block | |
|---|---|---|---|---|
| | | | In case of using an external regenerative resistor. | In case of not using an external regenerative resistor. |
| H-frame | without | without | (External regenerative resistor terminal)<br>• Terminal R1, R2 connect to B1, B2<br>• Terminal T1, T2 connection as shown above<br>• Terminal 24 V, 0 V connect to DC power supply of DC24 V.<br>• E terminal connect to the ground | • Open between B1-B2 |

Specification of external regenerative resistor, please refer to P.139, “Options Components”.

Note.2) About dynamic brake resistor

| Frame No. | Short bar (Accessory) | Built-in dynamic brake resistor. | Connection of terminal block | |
|---|---|---|---|---|
| | | | In case of using an external dynamic brake resistor. | In case of not using an external dynamic brake resistor. |
| H-frame | without | without | • Connect external dynamic brake resistor as shown above. | • Open between DB1-DB2 |

<common for G & H frame>

Note.3) Magnetic contactor MC2 must be the same rating as the contactor MC1 in the main circuit.

Note.4) Servo may be turned on in the external sequence if the contact deposits: to protect the system, provide the auxiliary contact.

Note.5) Provide an external protective device (e.g. thermal fuse) to monitor the temperature of the external dynamic brake resistor.

Note.6) Reactor should be prepared by the customer.

* Refer to P.186, P.187, Specifications of Motor connector.

# Wiring to Connector, XA, XB, XC, XD and Terminal Block

## In Case of 3-phase, D-frame and E-frame, 400 V type

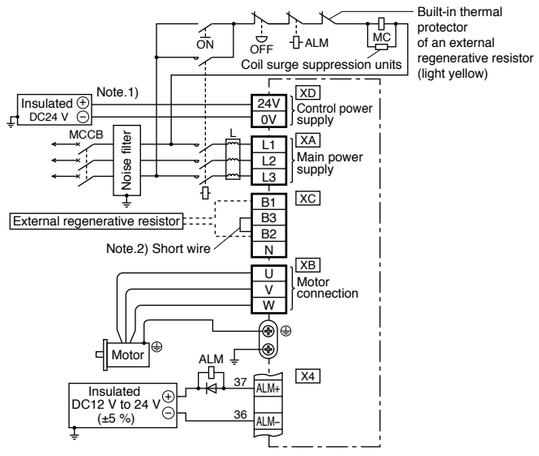


Note.1) Shielding the circuit is recommended for the purpose of noise reduction.
Note.2)

| Frame No. | Short wire (Accessory) | Built-in regenerative resistor | Connection of the connector XC | |
|---|---|---|---|---|
| | | | In case of using an external regenerative resistor. | In case of not using an external regenerative resistor. |
| E-frame | with | with | • Remove the short wire accessory from between B2-B3.<br>• Connect an external regenerative resistor between B1-B2 | • Shorted between B2-B3 with an attached short wire |

## In Case of 3-phase, F-frame, 400 V type

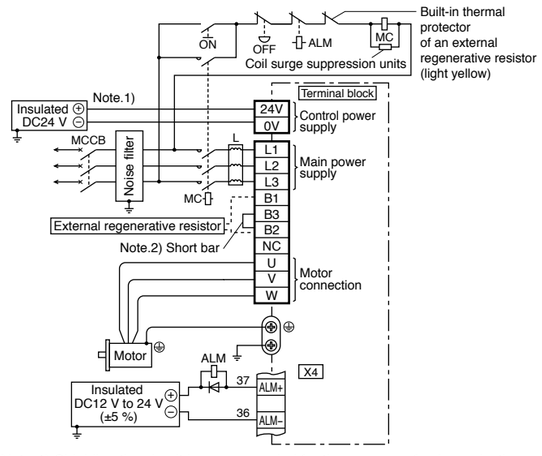


Note.1) Shielding the circuit is recommended for the purpose of noise reduction.
Note.2)

| Frame No. | Short bar (Accessory) | Built-in regenerative resistor | Connection of terminal block | |
|---|---|---|---|---|
| | | | In case of using an external regenerative resistor. | In case of not using an external regenerative resistor. |
| F-frame | with | with | • Remove the short bar accessory from between B2-B3.<br>• Connect an external regenerative resistor between B1-B2 | • Shorted between B2-B3 with an attached short bar |

## In Case of 3-phase, G-frame, 400 V type

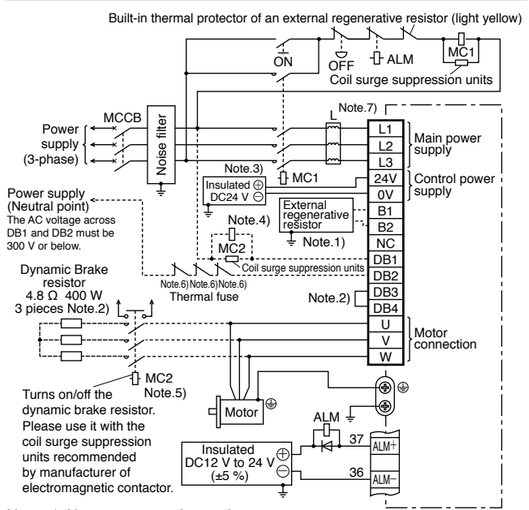


Note.1) About regenerative resistor

| Frame No. | Short bar (Accessory) | Built-in regenerative resistor | Connection of terminal block | |
|---|---|---|---|---|
| | | | In case of using an external regenerative resistor. | In case of not using an external regenerative resistor. |
| G-frame | without | without | • Connect an external regenerative resistor between B1-B2 | • Open between B1-B2 |

Note.2) About dynamic brake resistor

| Frame No. | Short bar (Accessory) | Built-in dynamic brake resistor. | Connection of terminal block | |
|---|---|---|---|---|
| | | | In case of using an external dynamic brake resistor. | In case of not using an external dynamic brake resistor. |
| G-frame | with | with | • Remove attached short bar between DB3-DB4.<br>• Connect external dynamic brake resistor as shown above. | • Shorted with attached short bar between DB3-DB4<br>• Open between DB1-DB2 |

## In Case of 3-phase, H-frame, 400 V type

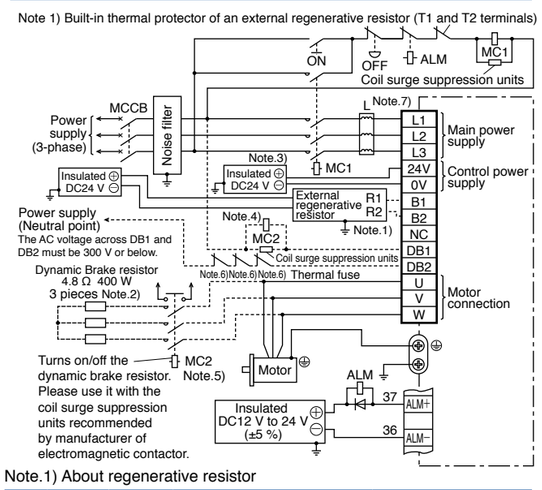


Note.1) About regenerative resistor

| Frame No. | Short bar (Accessory) | Built-in regenerative resistor | Connection of terminal block | |
|---|---|---|---|---|
| | | | In case of using an external regenerative resistor. | In case of not using an external regenerative resistor. |
| H-frame | without | without | (External regenerative resistor terminal)<br>• Terminal R1, R2 connect to B1, B2<br>• Terminal T1, T2 connection as shown above<br>• Terminal 24 V,0 V connect to DC power supply of DC24 V .<br>• E terminal connect to the ground | • Open between B1-B2 |

Specification of external regenerative resistor, please refer to P.139, "Options Components".

Note.2) About dynamic brake resistor

| Frame No. | Short bar (Accessory) | Built-in dynamic brake resistor. | Connection of terminal block | |
|---|---|---|---|---|
| | | | In case of using an external dynamic brake resistor. | In case of not using an external dynamic brake resistor. |
| H-frame | without | without | • Connect external dynamic brake resistor as shown above. | • Open between DB1-DB2 |

<common for G & H frame>
Note.3) Shielding the circuit is recommended for the purpose of noise reduction.
Note.4) Magnetic contactor MC2 must be the same rating as the contactor MC1 in the main circuit.
Note.5) Servo may be turned on in the external sequence if the contact deposits: to protect the system, provide the auxiliary contact.
Note.6) Provide an external protective device (e.g. thermal fuse) to monitor the temperature of the external dynamic brake resistor.
Note.7) Reactor should be prepared by the customer.

* Refer to P.186, P.187, Specifications of Motor connector.





# Wiring to the Connector, X3 (Excluding A5ⅡE, A5E Series)

Connecting the host controller can configure a safety circuit that controls the safety functions.
When not constructing the safety circuit, use the supplied safety bypass plug.

## Outline Description of Safe Torque Off (STO)

The safe torque off (STO) function is a safety function that shuts the motor current and turns off motor output torque by forcibly turning off the driving signal of the servo driver internal power transistor. For this purpose, the STO uses safety input signal and hardware (circuit).
When STO function operates, the servo driver turns off the servo ready output signal (S-RDY) and enters safety state.
This is an alarm condition and the 7-seg LED on the front panel displays the error code number.

## Safety Precautions

- When using the STO function, be sure to perform equipment risk assessment to ensure that the system conforms to the safety requirements.
- Even while the STO function is working, the following potential safety hazards exist. Check safety in risk assessment.
  - The motor may move when external force (e.g. gravity force on vertical axis) is exerted on it. Provide an external brake, etc., as necessary to secure the motor. Note that the purpose of motor with brake is holding and it cannot be used for braking application.
  - When parameter Pr5.10 Sequence at alarm is set to free run (disable dynamic brake), the motor is free run state and requires longer stop distance even if no external force is applied. Make sure that this does not cause any problem.
  - When power transistor, etc., becomes defective, the motor will move to the extent equivalent of 180 electrical angle (max.). Make sure that this does not cause any problem.
  - The STO turns off the current to the motor but does not turn off power to the servo driver and does not isolate it. When starting maintenance service on the servo driver, turn off the driver by using a different disconnecting device.
- External device monitor (EDM) output signal is not a safety signal. Do not use it for an application other than failure monitoring.
- Dynamic brake and external brake release signal output are not related to safety function. When designing the system, make sure that the failure of external brake release during STO condition does not result in danger condition.
- When using STO function, connect equipment conforming to the safety standards.

[Connector pin assignment]
(Viewed from cable)

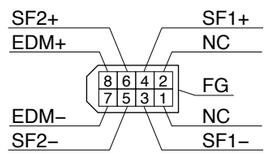


- System configuration

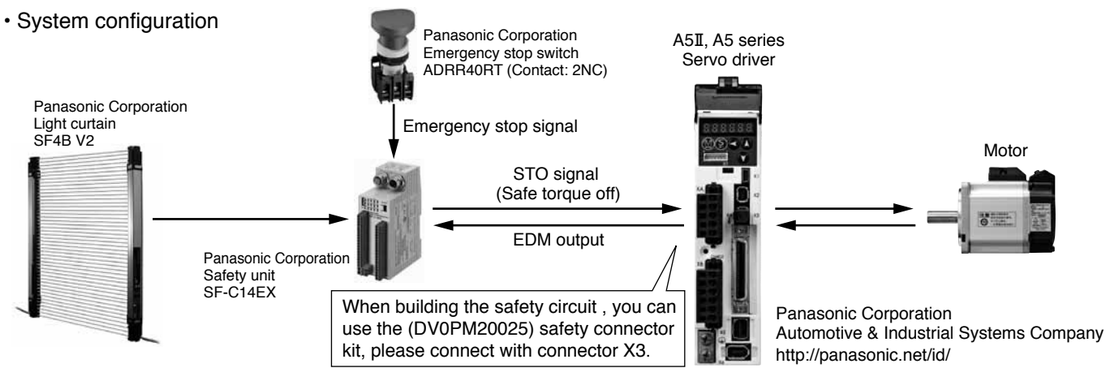

# Wiring to the Connector, X4

## Wiring Example of Position Control Mode

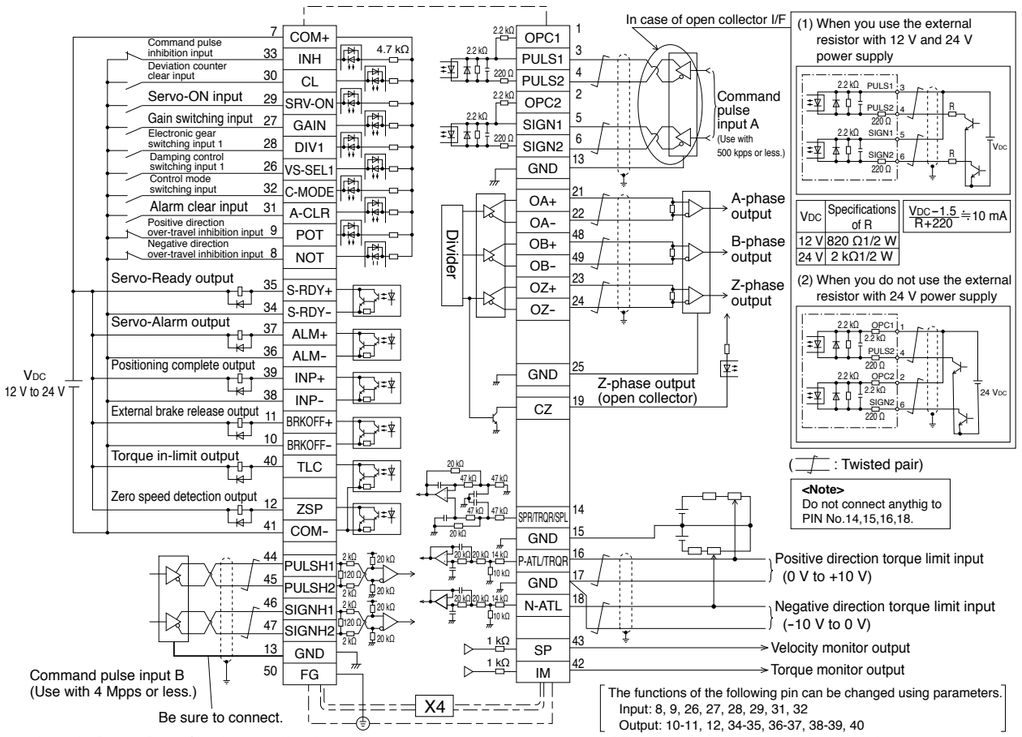


**<Remark>** Refer to P.198, Specifications of Interface connector.

* The above diagram is a composition of the shipment parameter.

## Wiring Example of Velocity Control Mode (Excluding A5IIE, A5E series)

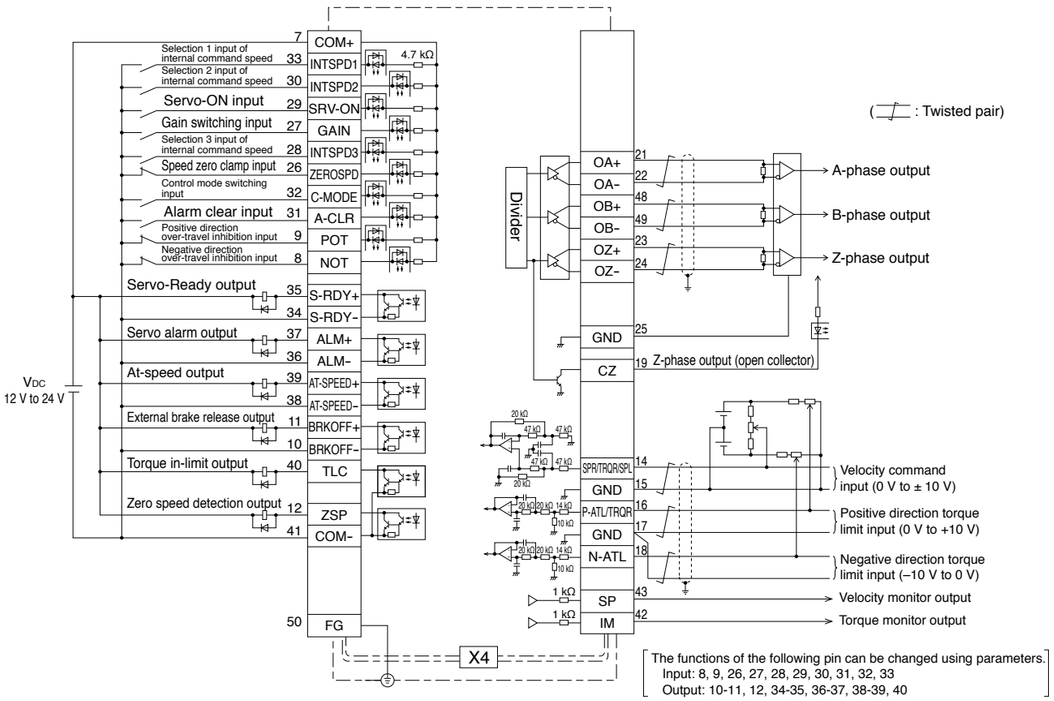


**<Remark>** Refer to P.198, Specifications of Interface connector.

* The above diagram is a composition of the shipment parameter.



## Wiring Example of Torque Control Mode (Excluding A5IIE, A5E series)

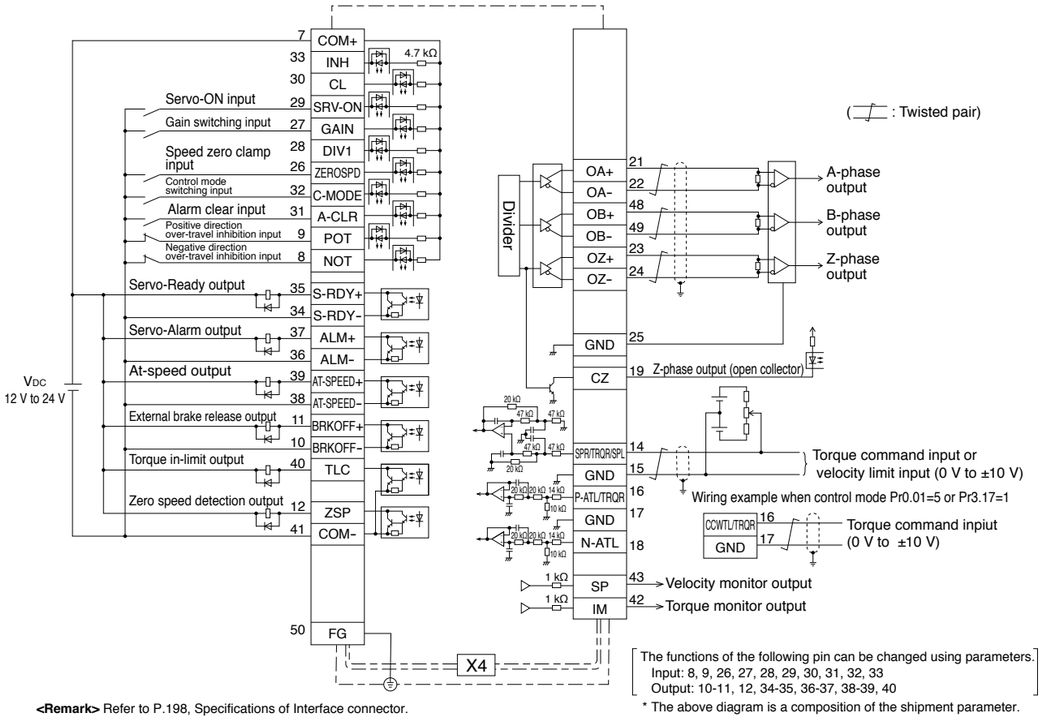


**<Remark>** Refer to P.198, Specifications of Interface connector.

* The above diagram is a composition of the shipment parameter.

## Wiring Example of Full-closed Control Mode (Excluding A5IIE, A5E series)

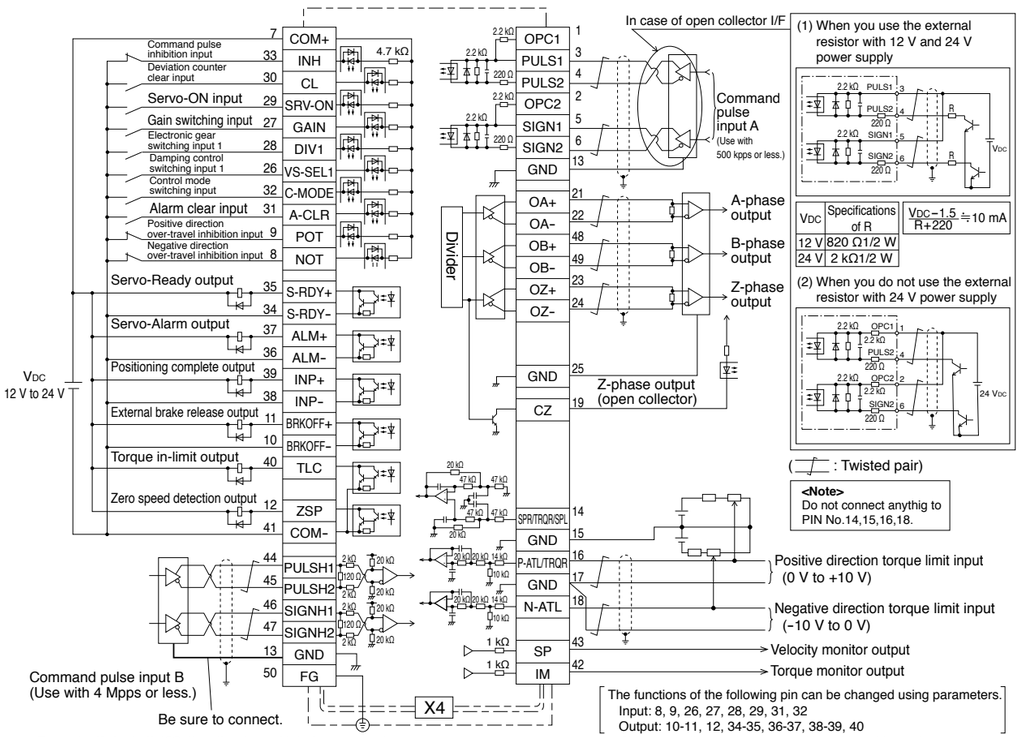


**<Remark>** Refer to P.198, Specifications of Interface connector.

* The above diagram is a composition of the shipment parameter.

# Wiring to the Connector, X5 (Excluding A5IIE, A5E series)

## Applicable External Scale

The manufacturers applicable external scales for this product are as follows.

- DR. JOHANNES HEIDENHAIN GmbH
- Fagor Automation S.Coop.
- Magnescale Co., Ltd.
- Mitutoyo Corporation
- Nidec Sankyo Corporation
- Renishaw plc

* For the details of the external scale product, contact each company.

## Wiring Diagram of X5

**<A-phase/B-phase>**

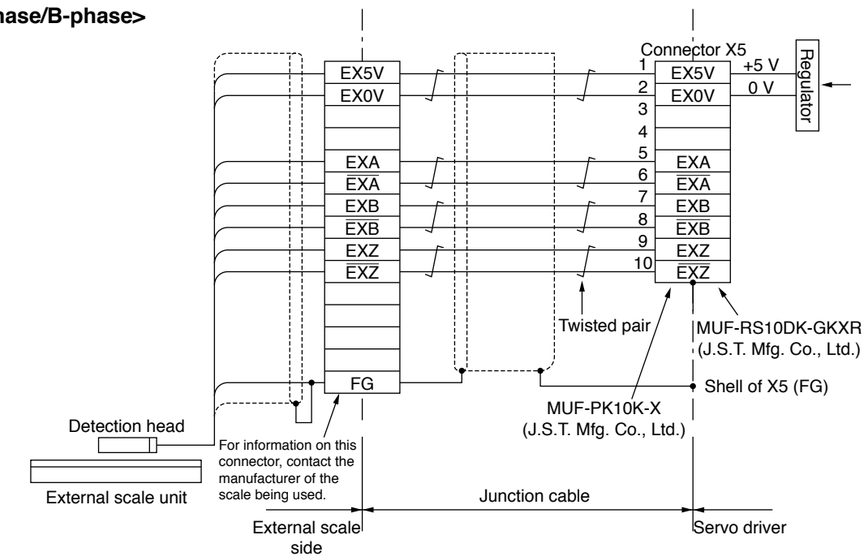


**<Serial>**

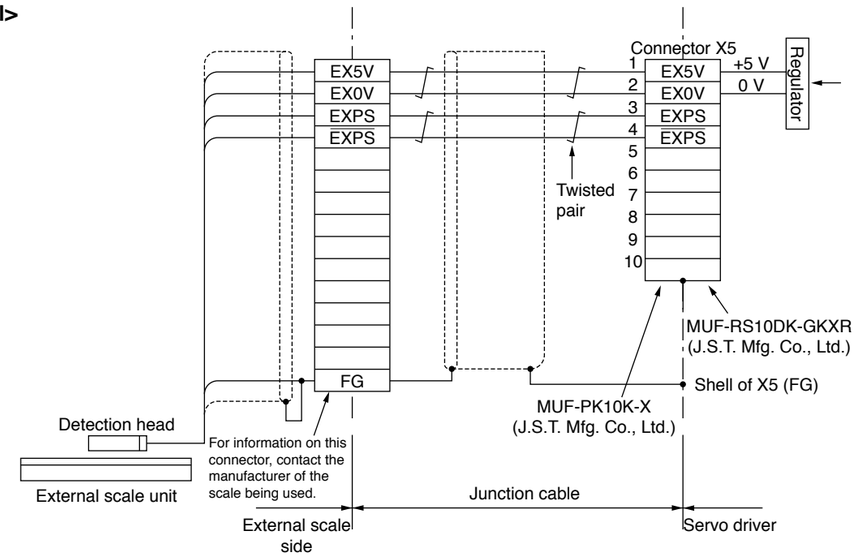






# Wiring to the Connector, X6

## In Case of 20-bit Incremental Encoder

**MSMD 50 W to 750 W, MHMD 200 W to 750 W**

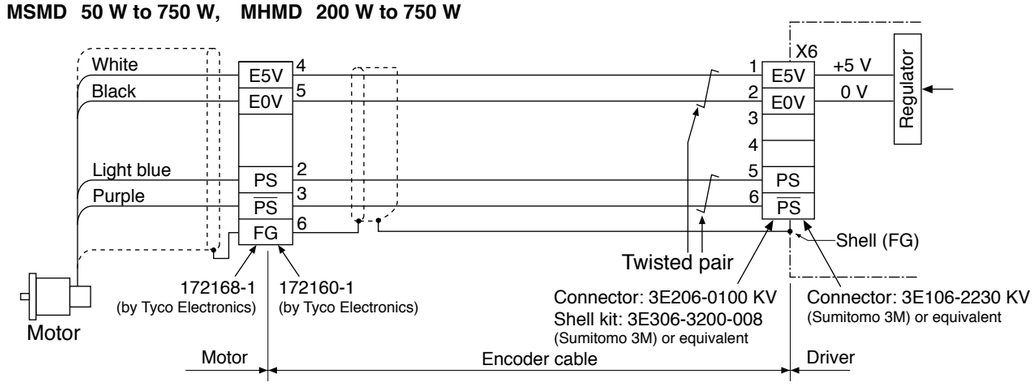


**MSME 50 W to 750 W (200 V)**

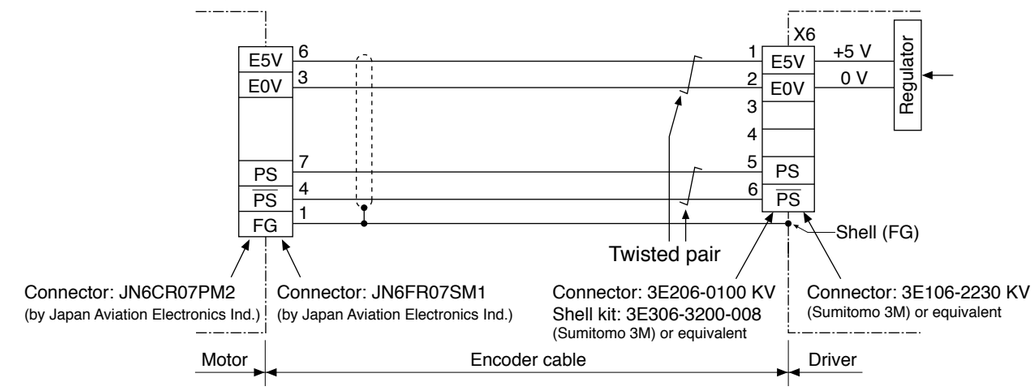


**<Caution>**

- Tighten the motor connector mounting screw (M2) with a torque between 0.19 N·m and 0.21 N·m. To avoid damage, be sure to use only the screw supplied with the connector.
- Do not remove the gasket supplied with the junction cable connector. Securely install the gasket in place. Otherwise, the degree of protection of IP67 will not be guaranteed.

[Connector pin assignment (Motor side)]

(Viewed from cable)

**MSME 750 W (400 V), 1.0 kW to 5.0 kW, MDME 400 W to 15.0 kW, MFME 1.5 kW to 4.5 kW**
**MGME 0.9 kW to 6.0 kW, MHME 1.0 kW to 7.5 kW**

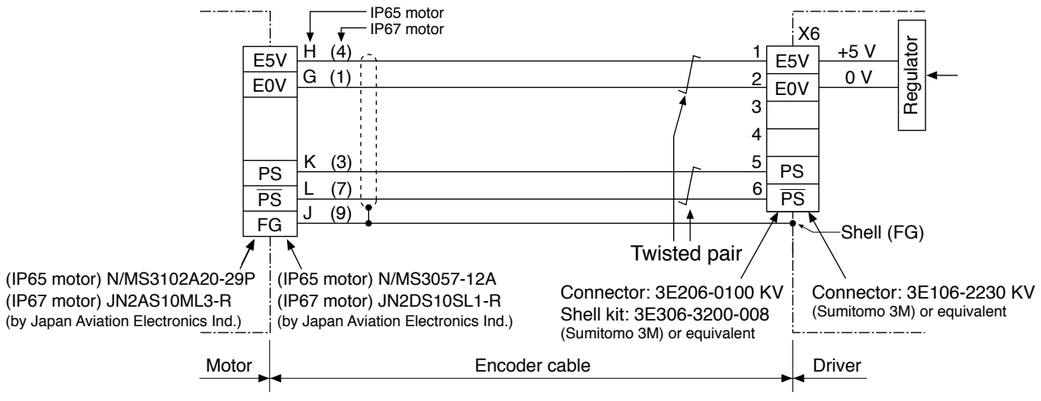


[Connector pin assignment] Refer to P.186, P.187 “Specifications of Motor connector”.

# Wiring to the Connector, X6

## In Case of 17-bit Absolute Encoder (A5IIE, A5E series does not correspond.)

**MSMD 50 W to 750 W, MHMD 200 W to 750 W**

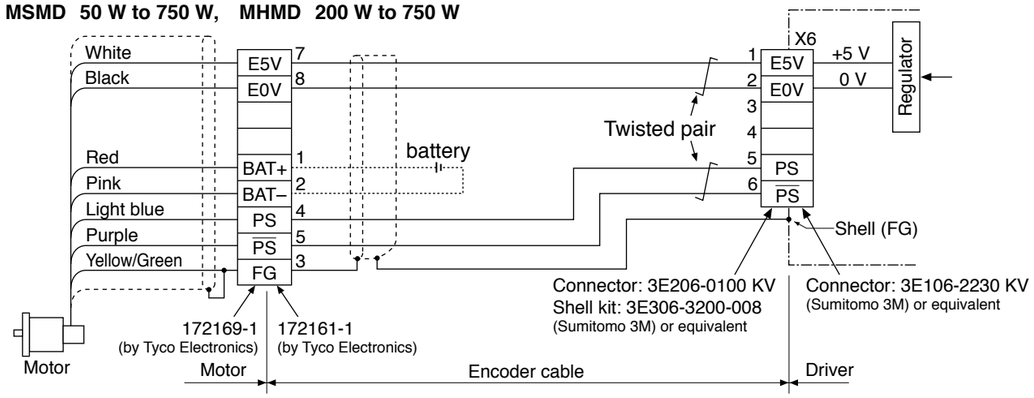


**MSME 50 W to 750 W (200 V)**

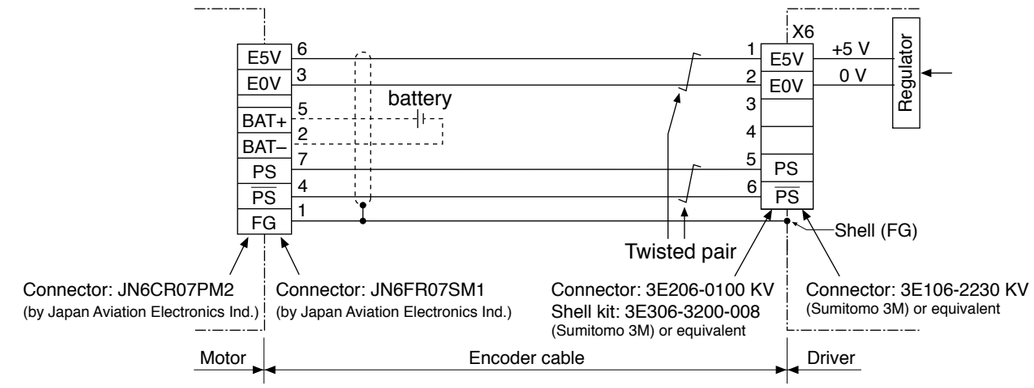


**<Caution>**

- Tighten the motor connector mounting screw (M2) with a torque between 0.19 N·m and 0.21 N·m. To avoid damage, be sure to use only the screw supplied with the connector.
- Do not remove the gasket supplied with the junction cable connector. Securely install the gasket in place. Otherwise, the degree of protection of IP67 will not be guaranteed.

[Connector pin assignment (Motor side)]

(Viewed from cable)

**MSME 750 W (400 V), 1.0 kW to 5.0 kW, MDME 400 W to 15.0 kW, MFME 1.5 kW to 4.5 kW**
**MGME 0.9 kW to 6.0 kW, MHME 1.0 kW to 7.5 kW**

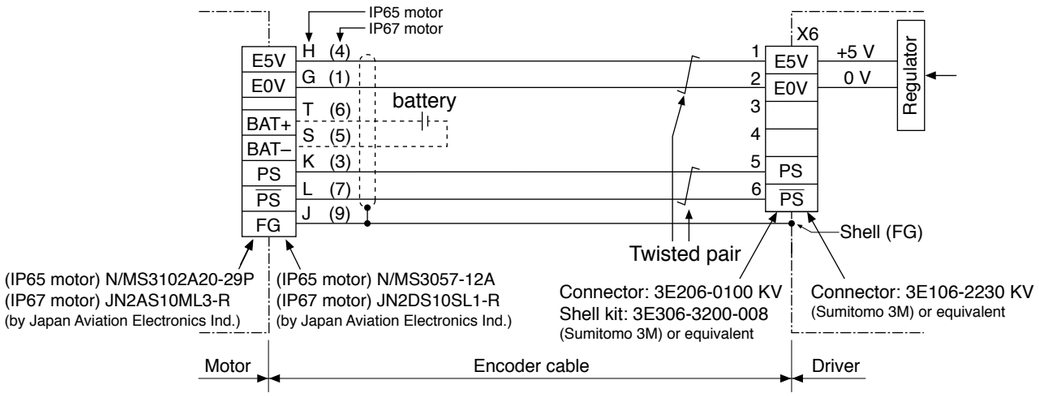


[Connector pin assignment] Refer to P.186, P.187 “Specifications of Motor connector”.





- The size of A5II, A5 series and A5IIE, A5E series is same.

*1 The height of the safety by-pass provided plug is one of the 14 mm or 24 mm to connector X3.

## A-frame

Unit [mm]

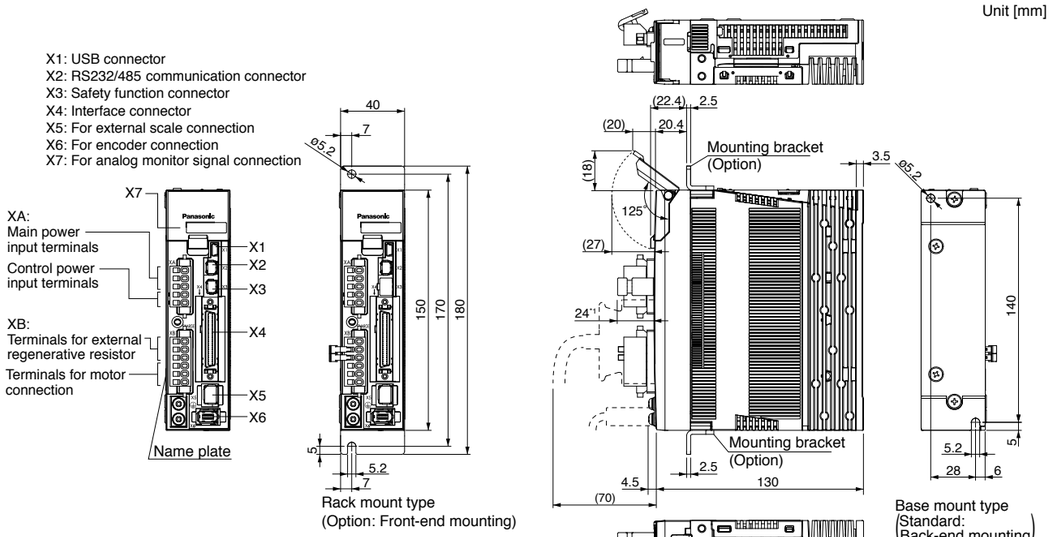


| Connector of driver side | | | A5II,A5 | A5IIE,A5E |
|---|---|---|---|---|
| Connector XA | S05B-F32SK-GGXR | J.S.T. Mfg. Co., Ltd. | ● | ● |
| Connector XB | S06B-F32SK-GGXR | J.S.T. Mfg. Co., Ltd. | ● | ● |
| Connector X1 | UB-M5BR-DMP14-4S (or equivalent) | J.S.T. Mfg. Co., Ltd. | ● | ● |
| Connector X2 | 1-2040537-1 (or equivalent) | Tyco Electronics | ● | – |
| Connector X3 | 2040537-1 (or equivalent) | Tyco Electronics | ● | – |
| Connector X4 | 10250-52A2PE (or equivalent) | Sumitomo 3M | ● | ● |
| Connector X5 | MUF-RS10DK-GKXR (or equivalent) | J.S.T. Mfg. Co., Ltd. | ● | – |
| Connector X6 | 3E106-2230 KV (or equivalent) | Sumitomo 3M | ● | ● |
| Connector X7 | 530140610 (or equivalent) | Japan Molex Inc. | ● | ● |

Mass: 0.8 kg

| Connector of power and motor side (Attached to the driver) | | | A5II,A5 | A5IIE,A5E |
|---|---|---|---|---|
| Connector XA | 05JFAT-SAXGF | J.S.T. Mfg. Co., Ltd. | ● | ● |
| Connector XB | 06JFAT-SAXGF | J.S.T. Mfg. Co., Ltd. | ● | ● |

## B-frame

Unit [mm]

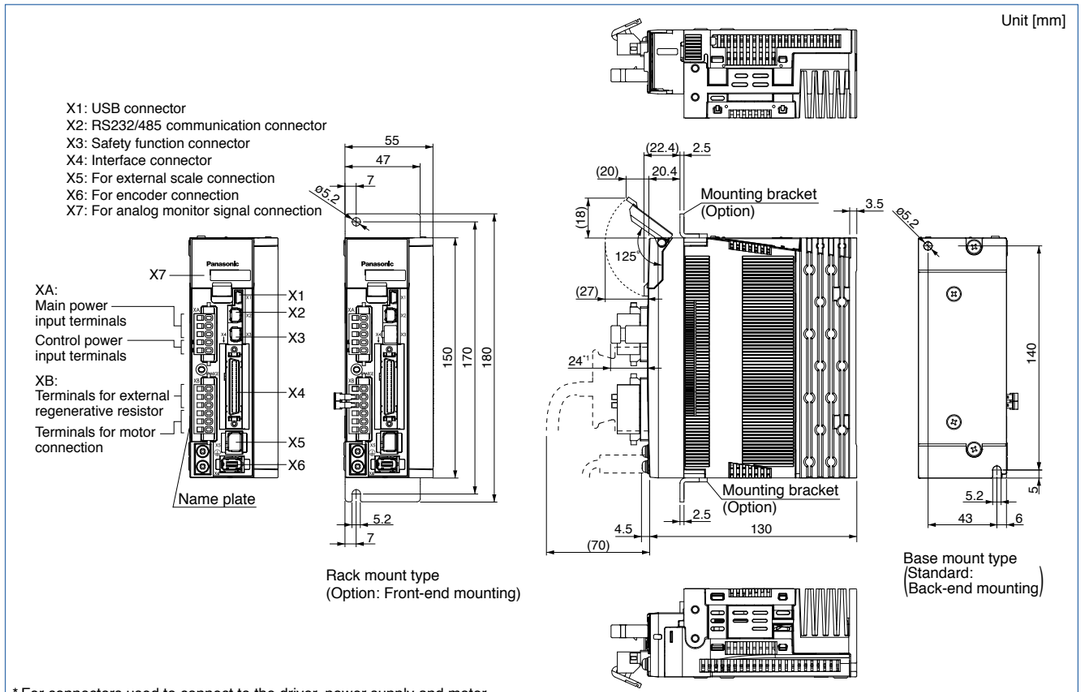


* For connectors used to connect to the driver, power supply and motor, refer to the A-frame table because both frames use the same connectors.

Mass: 1.0 kg

# Dimensions of Driver

● The size of A5Ⅱ, A5 series and A5ⅡE, A5E series is same.

*1 The height of the safety by-pass provided plug is one of the 14 mm or 24 mm to connector X3.

## C-frame

Unit [mm]

X1: USB connector
X2: RS232/485 communication connector
X3: Safety function connector
X4: Interface connector
X5: For external scale connection
X6: For encoder connection
X7: For analog monitor signal connection

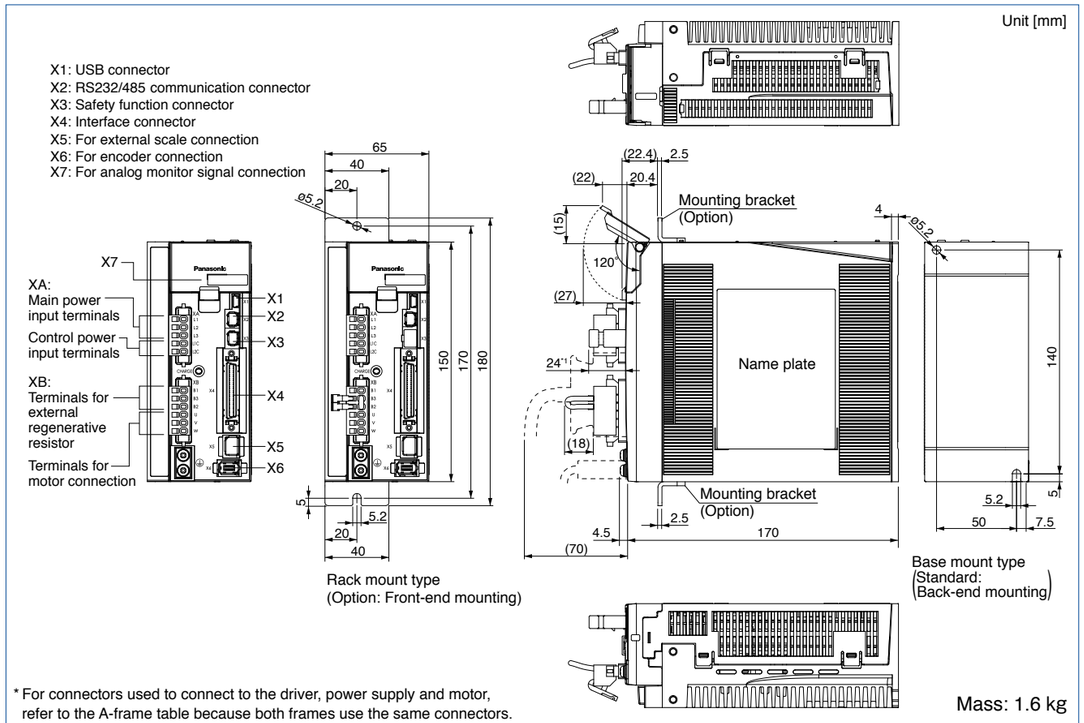


Mass: 1.6 kg

* For connectors used to connect to the driver, power supply and motor, refer to the A-frame table because both frames use the same connectors.

## D-frame (400 V)

Unit [mm]

XA: Main power input terminals
XB: Terminals for motor connection
XC: Terminals for external regenerative resistor
XD: Control power input terminals
X1: USB connector
X2: RS232/485 communication connector
X3: Safety function connector
X4: Interface connector
X5: For external scale connection
X6: For encoder connection
X7: For analog monitor signal connection

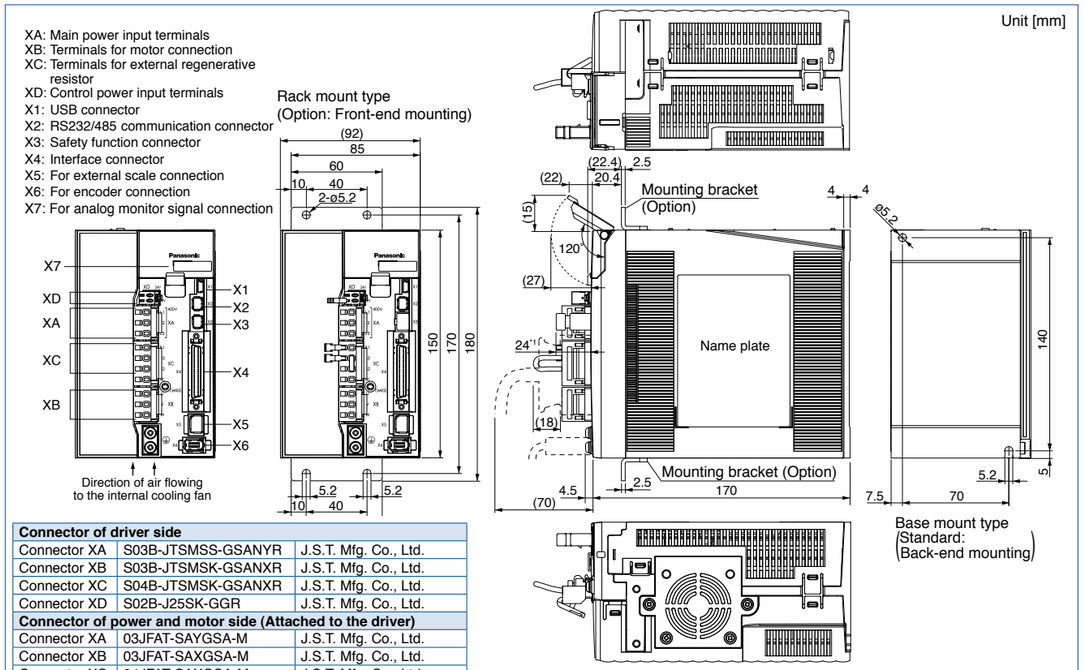


| Connector of driver side | | |
|---|---|---|
| Connector XA | S03B-JTSMSS-GSANYR | J.S.T. Mfg. Co., Ltd. |
| Connector XB | S03B-JTSMSK-GSANXR | J.S.T. Mfg. Co., Ltd. |
| Connector XC | S04B-JTSMSK-GSANXR | J.S.T. Mfg. Co., Ltd. |
| Connector XD | S02B-J25SK-GGR | J.S.T. Mfg. Co., Ltd. |
| **Connector of power and motor side (Attached to the driver)** | | |
| Connector XA | 03JFAT-SAYGSA-M | J.S.T. Mfg. Co., Ltd. |
| Connector XB | 03JFAT-SAXGSA-M | J.S.T. Mfg. Co., Ltd. |
| Connector XC | 04JFAT-SAXGSA-M | J.S.T. Mfg. Co., Ltd. |
| Connector XD | 02MJFAT-SAGF | J.S.T. Mfg. Co., Ltd. |

Mass: 1.9 kg

* For connectors X1 to X7 for connection to the driver, refer to those listed in the A-frame table because both frames use the same connectors.

## D-frame (200 V)

Unit [mm]

X1: USB connector
X2: RS232/485 communication connector
X3: Safety function connector
X4: Interface connector
X5: For external scale connection
X6: For encoder connection
X7: For analog monitor signal connection

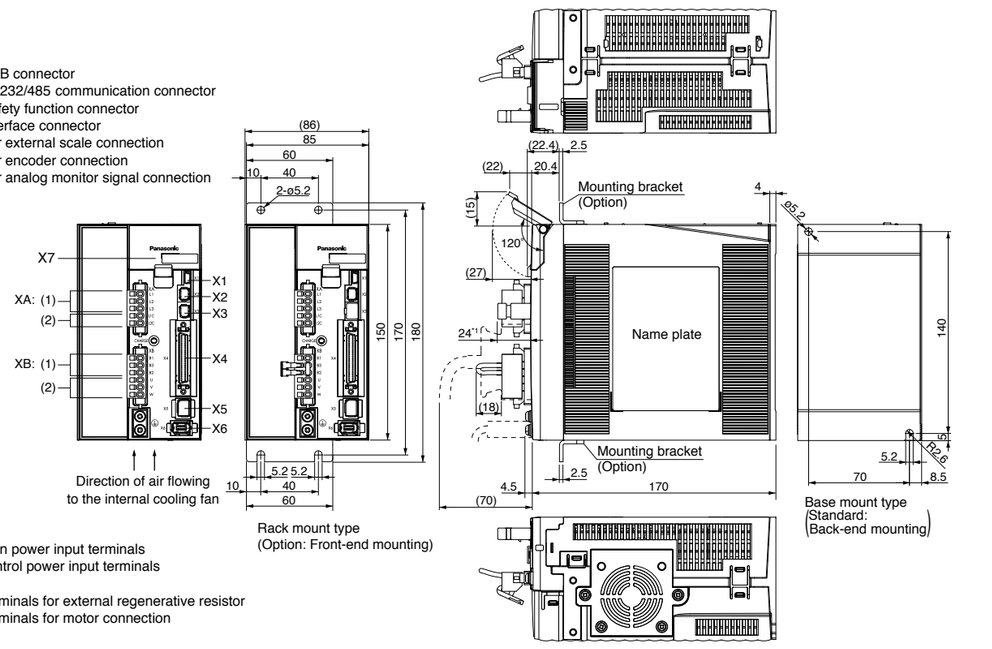


XA:
(1) Main power input terminals
(2) Control power input terminals
XB:
(1) Terminals for external regenerative resistor
(2) Terminals for motor connection

Mass: 1.8 kg

* For connectors used to connect to the driver, power supply and motor, refer to the A-frame table because both frames use the same connectors.

## E-frame (200 V)

Unit [mm]

X1: USB connector
X2: RS232/485 communication connector
X3: Safety function connector
X4: Interface connector
X5: For external scale connection
X6: For encoder connection
X7: For analog monitor signal connection

XA: (1) Main power input terminals
(2) Control power input terminals
XB: Terminals for motor connection
XC: Terminals for external regenerative resistor

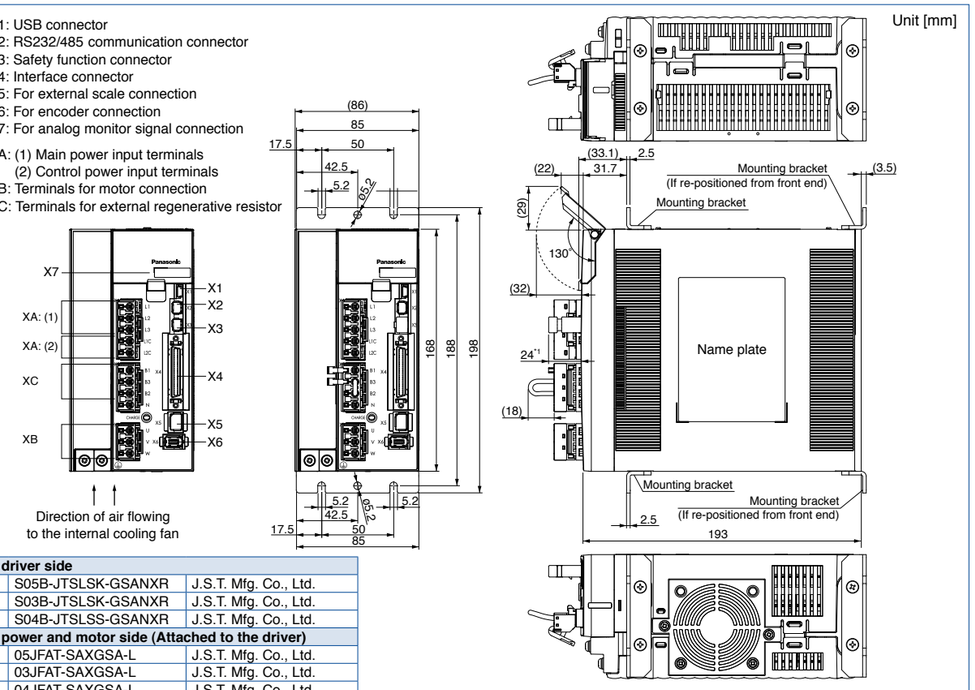


| Connector of driver side | | |
|---|---|---|
| Connector XA | S05B-JTSLSK-GSANXR | J.S.T. Mfg. Co., Ltd. |
| Connector XB | S03B-JTSLSK-GSANXR | J.S.T. Mfg. Co., Ltd. |
| Connector XC | S04B-JTSLSS-GSANXR | J.S.T. Mfg. Co., Ltd. |
| **Connector of power and motor side (Attached to the driver)** | | |
| Connector XA | 05JFAT-SAXGSA-L | J.S.T. Mfg. Co., Ltd. |
| Connector XB | 03JFAT-SAXGSA-L | J.S.T. Mfg. Co., Ltd. |
| Connector XC | 04JFAT-SAXGSA-L | J.S.T. Mfg. Co., Ltd. |

Mass: 2.7 kg

* For connectors X1 to X7 for connection to the driver, refer to those listed in the A-frame table because both frames use the same connectors.

# Dimensions of Driver

● The size of A5Ⅱ, A5 series and A5ⅡE, A5E series is same.

*1 The height of the safety by-pass provided plug is one of the 14 mm or 24 mm to connector X3.

## E-frame (400 V)

Unit [mm]

X1: USB connector
X2: RS232/485 communication connector
X3: Safety function connector
X4: Interface connector
X5: For external scale connection
X6: For encoder connection
X7: For analog monitor signal connection

XA: Main power input terminals
XB: Terminals for motor connection
XC: Terminals for external regenerative resistor
XD: Control power input terminals

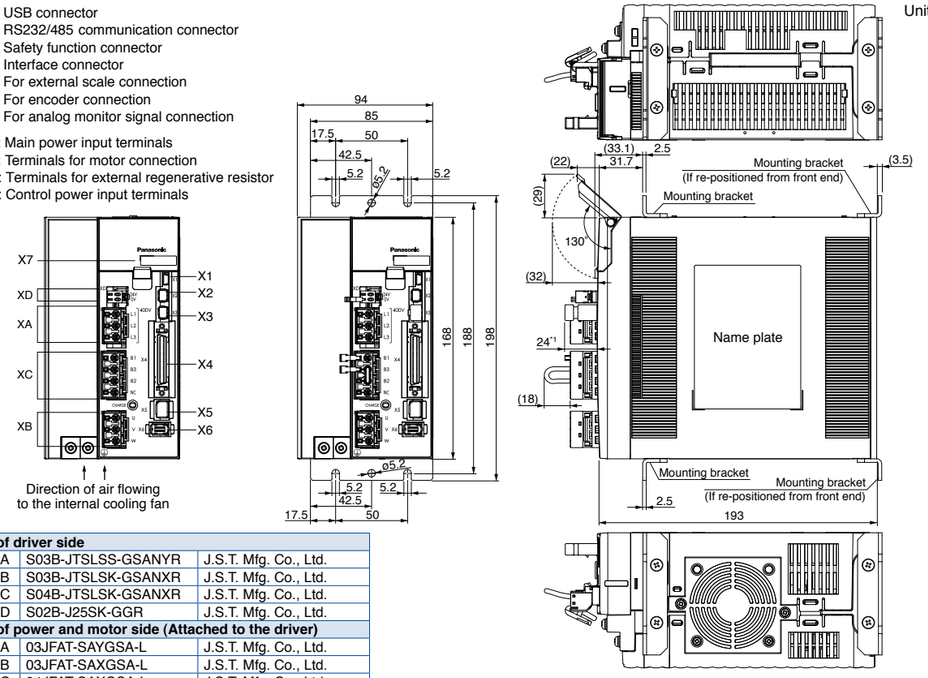


| Connector of driver side | | |
|---|---|---|
| Connector XA | S03B-JTSLSS-GSANYR | J.S.T. Mfg. Co., Ltd. |
| Connector XB | S03B-JTSLSK-GSANXR | J.S.T. Mfg. Co., Ltd. |
| Connector XC | S04B-JTSLSK-GSANXR | J.S.T. Mfg. Co., Ltd. |
| Connector XD | S02B-J25SK-GGR | J.S.T. Mfg. Co., Ltd. |
| **Connector of power and motor side (Attached to the driver)** | | |
| Connector XA | 03JFAT-SAYGSA-L | J.S.T. Mfg. Co., Ltd. |
| Connector XB | 03JFAT-SAXGSA-L | J.S.T. Mfg. Co., Ltd. |
| Connector XC | 04JFAT-SAXGSA-L | J.S.T. Mfg. Co., Ltd. |
| Connector XD | 02MJFAT-SAGF | J.S.T. Mfg. Co., Ltd. |

Mass: 2.7 kg

* For connectors X1 to X7 for connection to the driver, refer to those listed in the A-frame table because both frames use the same connectors.

## F-frame (200 V/400 V)

Unit [mm]

X1: USB connector
X2: RS232/485 communication connector
X3: Safety function connector
X4: Interface connector
X5: For external scale connection
X6: For encoder connection
X7: For analog monitor signal connection

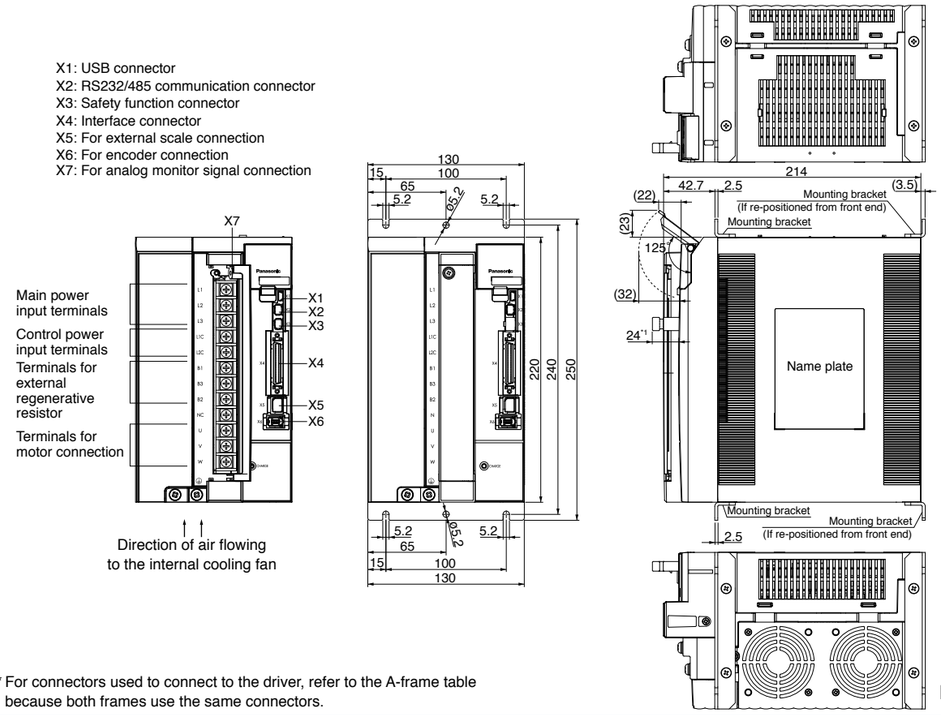


Mass: 4.8 kg

* For connectors used to connect to the driver, refer to the A-frame table because both frames use the same connectors.

## G-frame (200 V/400 V) * A5ⅡE, A5E series is out of the lineup.

Unit [mm]

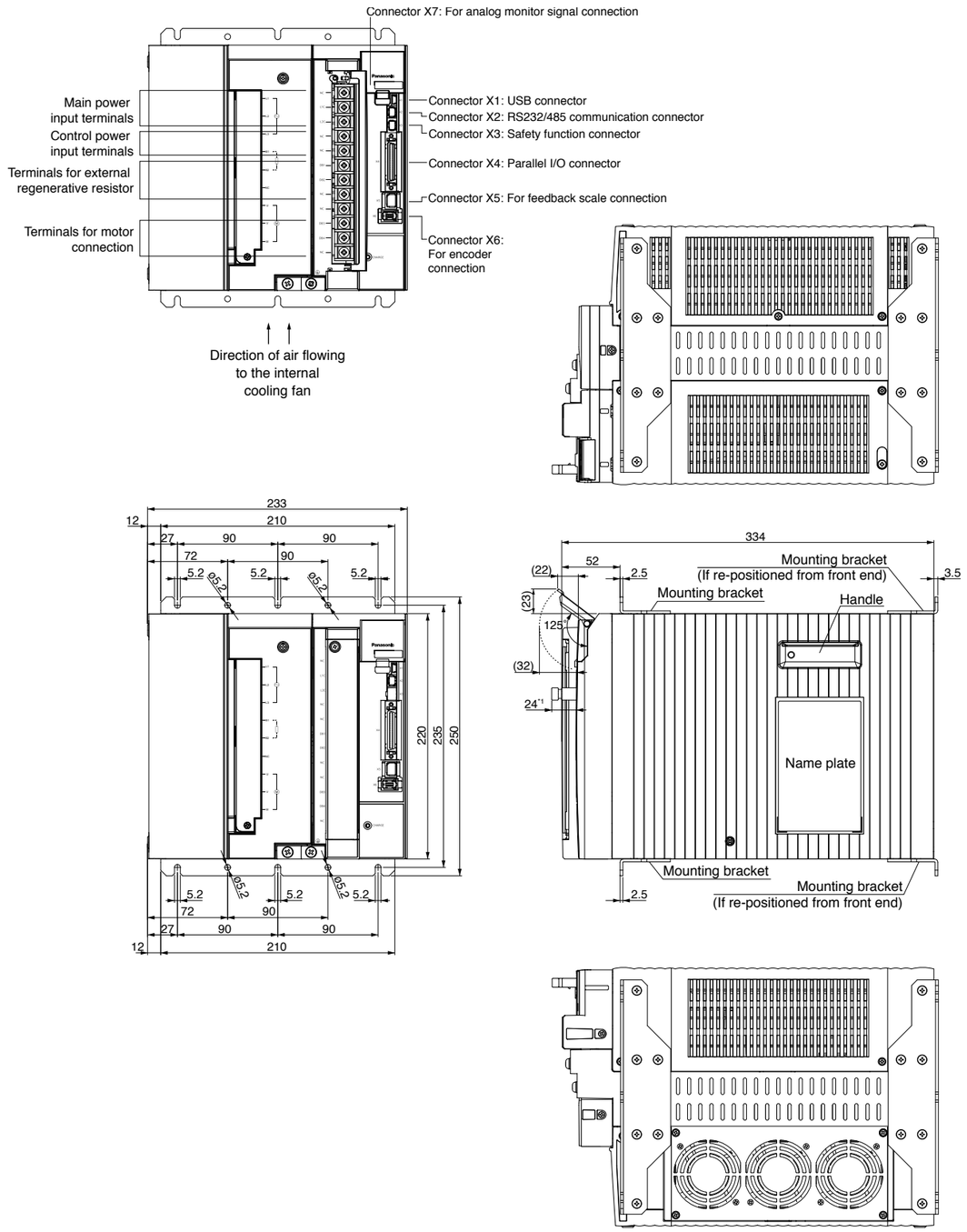


* For connectors used to connect to the driver, refer to the A-frame table because both frames use the same connectors.

Mass: 13.5 kg

● A5ⅡE, A5E series is out of the lineup.

*1 The height of the safety by-pass provided plug is one of the 11 mm or 21 mm to connector X3.

## H-frame (200 V/400 V)

Unit [mm]

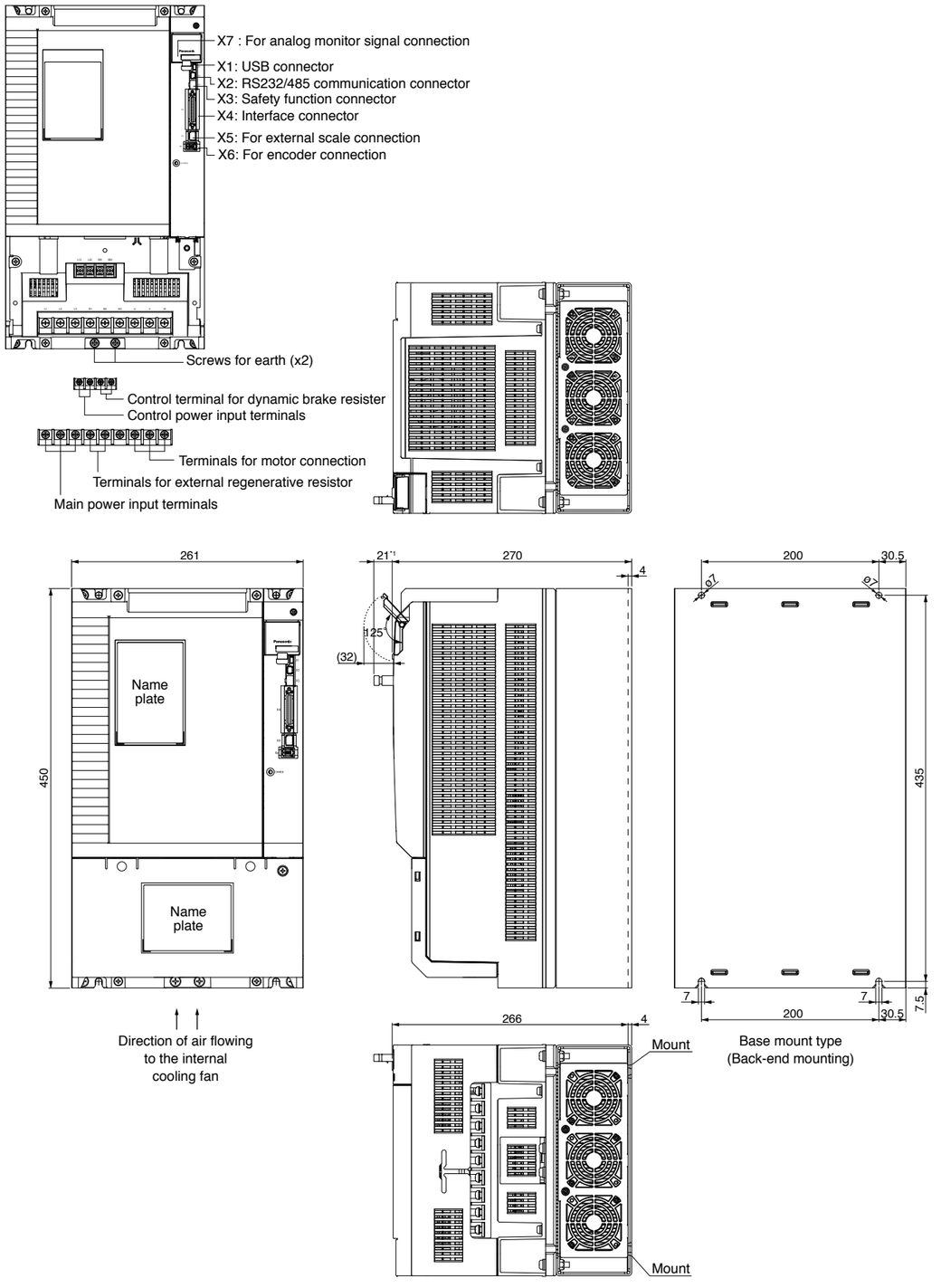


Mass: 21.0 kg

* For connectors used to connect to the driver, refer to the A-frame table because both frames use the same connectors.





## Features/ Lineup

### Features

- Line-up IP65 motor: 50 W to 5.0 kW
  IP67 motor: 50 W to 15.0 kW
- Max speed: 6000r/min (MSME 50 W to 750 W)
- Low inertia (MSME) to High inertia (MHME).
- Low cogging torque: Rated torque ratio 0.5 % (typical value).
- 20-bit incremental encoder (1048576 pulse)
- 17-bit absolute encoder (131072 pulse).

### Motor Lineup

| | | | |
|---|---|---|---|
| Small capacity | **MSME** **Low inertia** Max. speed: 6000 r/min Rated speed: 3000 r/min Rated output: 50 W to 750 W(200 V) Enclosure: IP67 | **MSMD** **Low inertia** Max. speed: 5000 r/min : 4500 r/min(750 W) Rated speed: 3000 r/min Rated output: 50 W to 750 W Enclosure: IP65 | **MHMD** **High inertia** Max. speed: 5000 r/min : 4500 r/min(750 W) Rated speed: 3000 r/min Rated output: 200 W to 750 W Enclosure: IP65 |
| Middle capacity | **MSME** **Low inertia** Max. speed: 5000r /min : 4500 r/min (from 4.0 kW) Rated speed: 3000 r/min Rated output: 750 W(400 V), 1.0 kW to 5.0 kW Enclosure: IP65, IP67 | **MDME** **Middle inertia** Max. speed: 3000 r/min : 2000 r/min (from 11.0 kW) Rated speed: 2000 r/min : 1500 r/min (from 7.5 kW) Rated output IP65: 400 W to 5.0 kW IP67: 400 W to 15.0 kW Enclosure: IP65, IP67 | **MFME** (Flat type)* **Middle inertia** Max. speed: 3000 r/min Rated speed: 2000 r/min Rated output: 1.5 kW to 4.5 kW Enclosure: IP67 |
| | **MGME** (Low speed/ High torque type) **Middle inertia** Max. speed: 2000 r/min Rated speed: 1000 r/min Rated output IP65: 0.9 kW to 3.0 kW IP67: 0.9 kW to 6.0 kW Enclosure: IP65, IP67 | **MHME** **High inertia** Max. speed: 3000 r/min Rated speed: 2000 r/min : 1500 r/min(7.5 kW) Rated output IP65: 1.0 kW to 5.0 kW IP67: 1.0 kW to 7.5 kW Enclosure: IP65, IP67 | **Middle capacity motor has the IP67 type.** 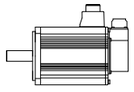 **(IP65 type motor)** 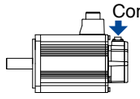 Compact **(IP67 type motor)** Part No.: M□ME＊＊＊＊□＊ C: IP65 motor 1: IP67 motor |

Motor Contents

**MSMD (100 V/200 V)**
50 W to 750 W ..... P.49

**MHMD (100 V/200 V)**
200 W to 750 W ..... P.59

**MSME (100 V/200 V)**
50 W to 750 W ..... P.65

**MSME (200 V)**
1.0 kW to 5.0 kW ..... P.74

**MDME (200 V)**
1.0 kW to 15.0 kW ..... P.80

**MFME (200 V)**
1.5 kW to 4.5 kW ..... P.89

**MGME (200 V)**
0.9 kW to 6.0 kW ..... P.92

**MHME (200 V)**
1.0 kW to 7.5 kW ..... P.97

**MSME (400 V)**
750 W to 5.0 kW ..... P.104

**MDME (400 V)**
400 W to 15.0 kW .....P.111

**MFME (400 V)**
1.5 kW to 4.5 kW ..... P.122

**MGME (400 V)**
0.9 kW to 6.0 kW ..... P.125

**MHME (400 V)**
1.0 kW to 7.5 kW ..... P.130

**IP67 motor**
dimensions..... P.137

**Motors with Gear Reducer**
Type and Specifications..... P.141
Model No. designation..... P.142
The combination of the driver and the motor..... P.142
Table of motor specifications... P.143
Torque Characteristics of Motor ..... P.144
Dimensions of Motor..... P.147

**Motor Specification Description**
Environmental Conditions.... P.182
Notes on [Motor specification] page..... P.182
Permissible Load at Output Shaft..... P.183
Built-in Holding Brake..... P.184

# 100 V MSMD 50 W [Low inertia, Small capacity]

## Specifications

| | | | AC100 V | |
|---|---|---|---|---|
| Motor model *1 | IP65 | | MSMD5AZG1□ | MSMD5AZS1□ |
| | IP67 | | – | – |
| Applicable driver *2 | Model No. | A5Ⅱ, A5 series | MAD◇T1105 | |
| | | A5ⅡE, A5E series | MAD◇T1105E | – |
| | Frame symbol | | A-frame | |
| Power supply capacity (kVA) | | | 0.5 | |
| Rated output (W) | | | 50 | |
| Rated torque (N·m) | | | 0.16 | |
| Momentary Max. peak torque (N·m) | | | 0.48 | |
| Rated current (A(rms)) | | | 1.1 | |
| Max. current (A(o-p)) | | | 4.7 | |
| Regenerative brake frequency (times/min) Note)1 | Without option | | No limit Note)2 | |
| | DV0P4280 | | No limit Note)2 | |
| Rated rotational speed (r/min) | | | 3000 | |
| Max. rotational speed (r/min) | | | 5000 | |
| Moment of inertia of rotor ($\times 10^{-4}$ kg·m$^2$) | Without brake | | 0.025 | |
| | With brake | | 0.027 | |
| Recommended moment of inertia ratio of the load and the rotor Note)3 | | | 30 times or less | |
| Rotary encoder specifications Note)5 | | | 20-bit Incremental | 17-bit Absolute |
| | Resolution per single turn | | 1048576 | 131072 |

• **Brake specifications** (For details, refer to P.183)
(This brake will be released when it is energized. Do not use this for braking the motor in motion.)

| | |
|---|---|
| Static friction torque (N·m) | 0.29 or more |
| Engaging time (ms) | 35 or less |
| Releasing time (ms) Note)4 | 20 or less |
| Exciting current (DC) (A) | 0.3 |
| Releasing voltage (DC) (V) | 1 or more |
| Exciting voltage (DC) (V) | 24±1.2 |

• **Permissible load** (For details, refer to P.183)

| | | |
|---|---|---|
| During assembly | Radial load P-direction (N) | 147 |
| | Thrust load A-direction (N) | 88 |
| | Thrust load B-direction (N) | 117.6 |
| During operation | Radial load P-direction (N) | 68.6 |
| | Thrust load A, B-direction (N) | 58.8 |

• For details of Note 1 to Note 5, refer to P.182, P.183.
• Dimensions of Driver, refer to P.42.
*1 Motor specifications: □
*2 The product that the end of driver model designation has "E" is "Position control type". Detail of model designation, refer to P.16.
*3 ◇ in number of applicable driver represents the series. For more information about the part number, please refer to P.16.

## Torque characteristics (at AC100 V of power voltage <Dotted line represents the torque at 10 % less supply voltage.>)

Without oil seal

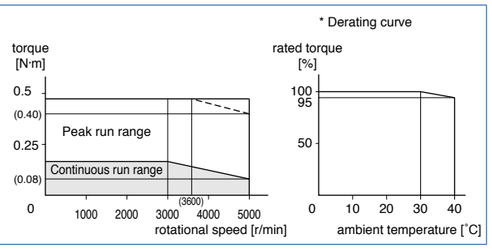


With oil seal

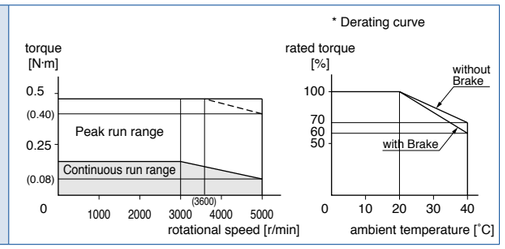


## Dimensions

<Without Brake>

Mass: 0.32 kg

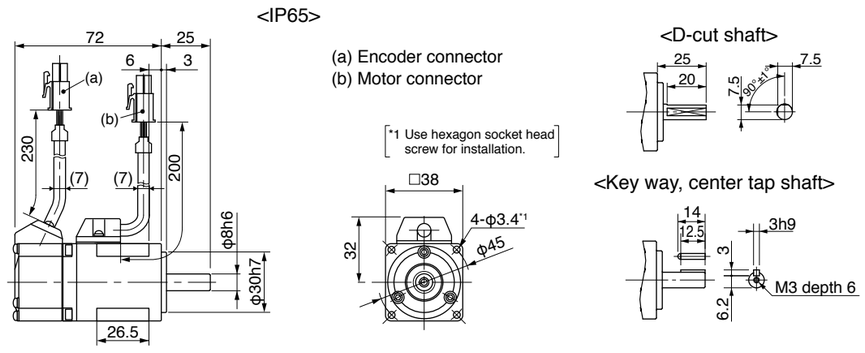


* For the dimensions with brake, refer to the right page.

[Unit: mm]

**<Cautions>** Reduce the moment of inertia ratio if high speed response operation is required.
Dimensions are subject to change without notice. Contact us or a dealer for the latest information.
Read the Instruction Manual carefully and understand all precautions and remarks before using the products.





# 200 V MSMD 50 W [Low inertia, Small capacity]

## Specifications

| | | | AC200 V | |
|---|---|---|---|---|
| Motor model *1 | IP65 | | MSMD5AZG1□ | MSMD5AZS1□ |
| | IP67 | | – | – |
| Applicable driver *2 | Model No. | A5Ⅱ, A5 series | MAD◇T1505 | |
| | | A5ⅡE, A5E series | MAD◇T1505E | – |
| | Frame symbol | | A-frame | |
| Power supply capacity (kVA) | | | 0.5 | |
| Rated output (W) | | | 50 | |
| Rated torque (N·m) | | | 0.16 | |
| Momentary Max. peak torque (N·m) | | | 0.48 | |
| Rated current (A(rms)) | | | 1.1 | |
| Max. current (A(o-p)) | | | 4.7 | |
| Regenerative brake frequency (times/min) Note)1 | Without option | | No limit Note)2 | |
| | DV0P4281 | | No limit Note)2 | |
| Rated rotational speed (r/min) | | | 3000 | |
| Max. rotational speed (r/min) | | | 5000 | |
| Moment of inertia of rotor ($\times 10^{-4}$ kg·m$^2$) | Without brake | | 0.025 | |
| | With brake | | 0.027 | |
| Recommended moment of inertia ratio of the load and the rotor Note)3 | | | 30 times or less | |
| Rotary encoder specifications Note)5 | | | 20-bit Incremental | 17-bit Absolute |
| | Resolution per single turn | | 1048576 | 131072 |

• **Brake specifications** (For details, refer to P.183)
(This brake will be released when it is energized. Do not use this for braking the motor in motion.)

| | |
|---|---|
| Static friction torque (N·m) | 0.29 or more |
| Engaging time (ms) | 35 or less |
| Releasing time (ms) Note)4 | 20 or less |
| Exciting current (DC) (A) | 0.3 |
| Releasing voltage (DC) (V) | 1 or more |
| Exciting voltage (DC) (V) | 24±1.2 |

• **Permissible load** (For details, refer to P.183)

| | | |
|---|---|---|
| During assembly | Radial load P-direction (N) | 147 |
| | Thrust load A-direction (N) | 88 |
| | Thrust load B-direction (N) | 117.6 |
| During operation | Radial load P-direction (N) | 68.6 |
| | Thrust load A, B-direction (N) | 58.8 |

• For details of Note 1 to Note 5, refer to P.182, P.183.
• Dimensions of Driver, refer to P.42.
*1 Motor specifications: □
*2 The product that the end of driver model designation has "E" is "Position control type". Detail of model designation, refer to P.16.
*3 ◇ in number of applicable driver represents the series. For more information about the part number, please refer to P.16.

## Torque characteristics (at AC200 V of power voltage <Dotted line represents the torque at 10 % less supply voltage.>)

Without oil seal

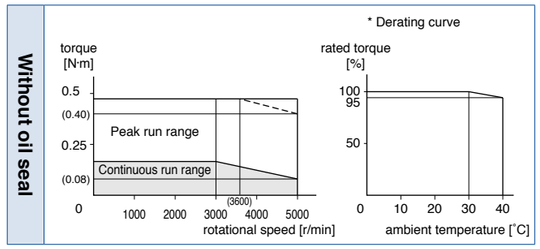


With oil seal

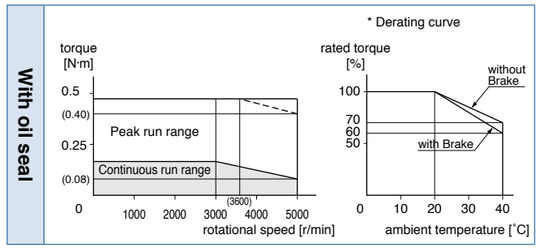


## Dimensions

<With Brake>

Mass: 0.53 kg

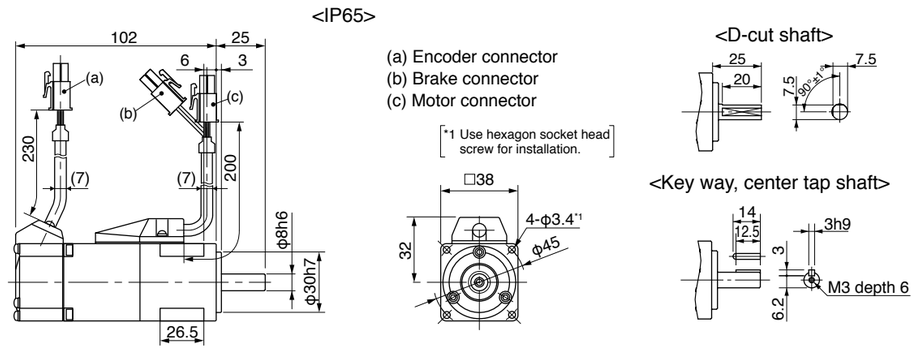


* For the dimensions without brake, refer to the left page.

[Unit: mm]

**<Cautions>** Reduce the moment of inertia ratio if high speed response operation is required.
Dimensions are subject to change without notice. Contact us or a dealer for the latest information.
Read the Instruction Manual carefully and understand all precautions and remarks before using the products.

# 100 V MSMD 100 W [Low inertia, Small capacity]

## Specifications

| | | | AC100 V | |
|---|---|---|---|---|
| Motor model *1 | IP65 | | MSMD011G1□ | MSMD011S1□ |
| | IP67 | | – | – |
| Applicable driver *2 | Model No. | A5Ⅱ, A5 series | MAD◇T1107 | |
| | | A5ⅡE, A5E series | MAD◇T1107E | – |
| | Frame symbol | | A-frame | |
| Power supply capacity (kVA) | | | 0.4 | |
| Rated output (W) | | | 100 | |
| Rated torque (N·m) | | | 0.32 | |
| Momentary Max. peak torque (N·m) | | | 0.95 | |
| Rated current (A(rms)) | | | 1.7 | |
| Max. current (A(o-p)) | | | 7.2 | |
| Regenerative brake frequency (times/min) Note)1 | Without option | | No limit Note)2 | |
| | DV0P4280 | | No limit Note)2 | |
| Rated rotational speed (r/min) | | | 3000 | |
| Max. rotational speed (r/min) | | | 5000 | |
| Moment of inertia of rotor ($\times 10^{-4}$ kg·m$^2$) | Without brake | | 0.051 | |
| | With brake | | 0.054 | |
| Recommended moment of inertia ratio of the load and the rotor Note)3 | | | 30 times or less | |
| Rotary encoder specifications Note)5 | | | 20-bit Incremental | 17-bit Absolute |
| | Resolution per single turn | | 1048576 | 131072 |

• **Brake specifications** (For details, refer to P.183)
(This brake will be released when it is energized. Do not use this for braking the motor in motion.)

| | |
|---|---|
| Static friction torque (N·m) | 0.29 or more |
| Engaging time (ms) | 35 or less |
| Releasing time (ms) Note)4 | 20 or less |
| Exciting current (DC) (A) | 0.3 |
| Releasing voltage (DC) (V) | 1 or more |
| Exciting voltage (DC) (V) | 24±1.2 |

• **Permissible load** (For details, refer to P.183)

| | | |
|---|---|---|
| During assembly | Radial load P-direction (N) | 147 |
| | Thrust load A-direction (N) | 88 |
| | Thrust load B-direction (N) | 117.6 |
| During operation | Radial load P-direction (N) | 68.6 |
| | Thrust load A, B-direction (N) | 58.8 |

• For details of Note 1 to Note 5, refer to P.182, P.183.
• Dimensions of Driver, refer to P.42.
*1 Motor specifications: □
*2 The product that the end of driver model designation has "E" is "Position control type". Detail of model designation, refer to P.16.
*3 ◇ in number of applicable driver represents the series. For more information about the part number, please refer to P.16.

## Torque characteristics (at AC100 V of power voltage <Dotted line represents the torque at 10 % less supply voltage.>)

Without oil seal

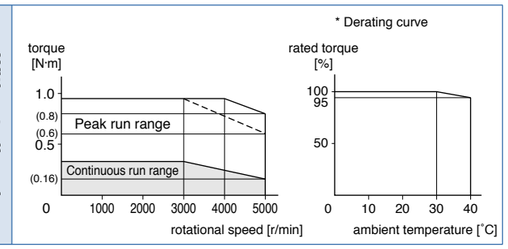


With oil seal

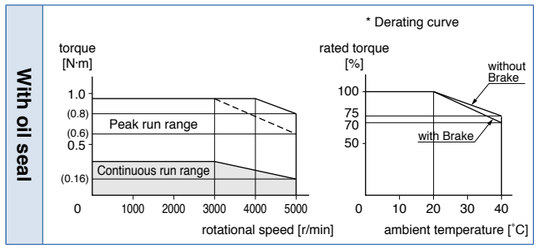


## Dimensions

<Without Brake>

Mass: 0.47 kg

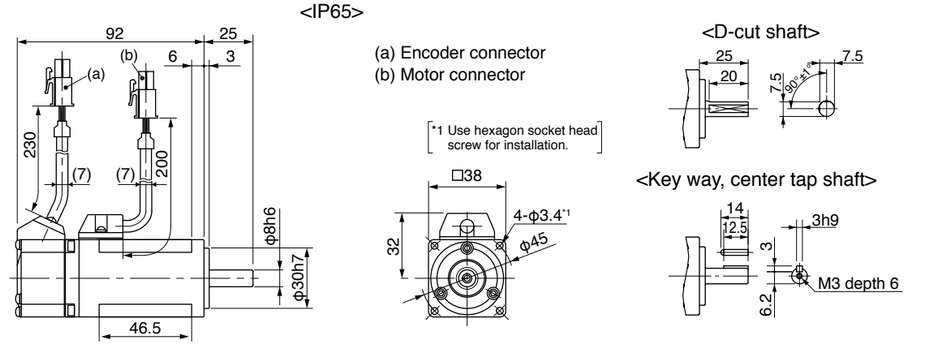


* For the dimensions with brake, refer to the right page.

[Unit: mm]

**<Cautions>** Reduce the moment of inertia ratio if high speed response operation is required.
Dimensions are subject to change without notice. Contact us or a dealer for the latest information.
Read the Instruction Manual carefully and understand all precautions and remarks before using the products.





# 200 V MSMD 100 W [Low inertia, Small capacity]

## Specifications

| | | | AC200 V | |
|---|---|---|---|---|
| Motor model *1 | IP65 | | MSMD012G1□ | MSMD012S1□ |
| | IP67 | | – | – |
| Applicable driver *2 | Model No. | A5Ⅱ, A5 series | MAD◇T1505 | |
| | | A5ⅡE, A5E series | MAD◇T1505E | – |
| | Frame symbol | | A-frame | |
| Power supply capacity (kVA) | | | 0.5 | |
| Rated output (W) | | | 100 | |
| Rated torque (N·m) | | | 0.32 | |
| Momentary Max. peak torque (N·m) | | | 0.95 | |
| Rated current (A(rms)) | | | 1.1 | |
| Max. current (A(o-p)) | | | 4.7 | |
| Regenerative brake frequency (times/min) Note)1 | Without option | | No limit Note)2 | |
| | DV0P4281 | | No limit Note)2 | |
| Rated rotational speed (r/min) | | | 3000 | |
| Max. rotational speed (r/min) | | | 5000 | |
| Moment of inertia of rotor ($\times 10^{-4}$ kg·m$^2$) | Without brake | | 0.051 | |
| | With brake | | 0.054 | |
| Recommended moment of inertia ratio of the load and the rotor Note)3 | | | 30 times or less | |
| Rotary encoder specifications Note)5 | | | 20-bit Incremental | 17-bit Absolute |
| | Resolution per single turn | | 1048576 | 131072 |

• **Brake specifications** (For details, refer to P.183)
(This brake will be released when it is energized. Do not use this for braking the motor in motion.)

| | |
|---|---|
| Static friction torque (N·m) | 0.29 or more |
| Engaging time (ms) | 35 or less |
| Releasing time (ms) Note)4 | 20 or less |
| Exciting current (DC) (A) | 0.3 |
| Releasing voltage (DC) (V) | 1 or more |
| Exciting voltage (DC) (V) | 24±1.2 |

• **Permissible load** (For details, refer to P.183)

| | | |
|---|---|---|
| During assembly | Radial load P-direction (N) | 147 |
| | Thrust load A-direction (N) | 88 |
| | Thrust load B-direction (N) | 117.6 |
| During operation | Radial load P-direction (N) | 68.6 |
| | Thrust load A, B-direction (N) | 58.8 |

• For details of Note 1 to Note 5, refer to P.182, P.183.
• Dimensions of Driver, refer to P.42.
*1 Motor specifications: □
*2 The product that the end of driver model designation has "E" is "Position control type". Detail of model designation, refer to P.16.
*3 ◇ in number of applicable driver represents the series. For more information about the part number, please refer to P.16.

## Torque characteristics (at AC200 V of power voltage)

Without oil seal

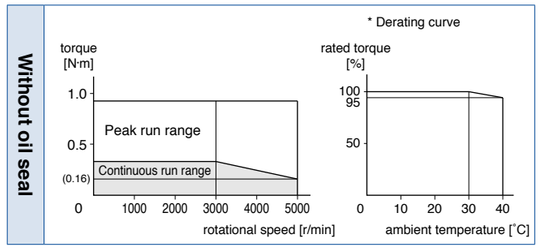


With oil seal

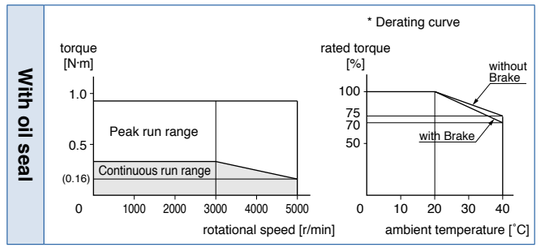


## Dimensions

<With Brake>

Mass: 0.68 kg

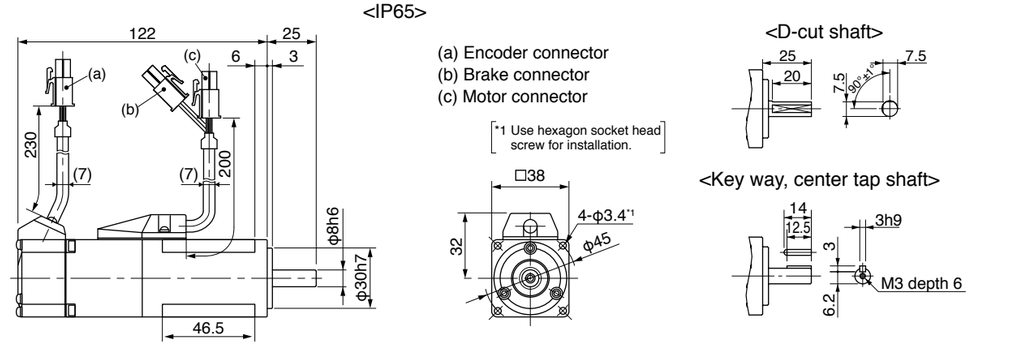


* For the dimensions without brake, refer to the left page.

[Unit: mm]

**<Cautions>** Reduce the moment of inertia ratio if high speed response operation is required.
Dimensions are subject to change without notice. Contact us or a dealer for the latest information.
Read the Instruction Manual carefully and understand all precautions and remarks before using the products.

# 100 V MSMD 200 W [Low inertia, Small capacity]

## Specifications

| | | | AC100 V | |
|---|---|---|---|---|
| Motor model *1 | IP65 | | MSMD021G1□ | MSMD021S1□ |
| | IP67 | | – | – |
| Applicable driver *2 | Model No. | A5Ⅱ, A5 series | MBD◇T2110 | |
| | | A5ⅡE, A5E series | MBD◇T2110E | – |
| | Frame symbol | | B-frame | |
| Power supply capacity (kVA) | | | 0.5 | |
| Rated output (W) | | | 200 | |
| Rated torque (N·m) | | | 0.64 | |
| Momentary Max. peak torque (N·m) | | | 1.91 | |
| Rated current (A(rms)) | | | 2.5 | |
| Max. current (A(o-p)) | | | 10.6 | |
| Regenerative brake frequency (times/min) Note)1 | Without option | | No limit Note)2 | |
| | DV0P4283 | | No limit Note)2 | |
| Rated rotational speed (r/min) | | | 3000 | |
| Max. rotational speed (r/min) | | | 5000 | |
| Moment of inertia of rotor ($\times 10^{-4}$ kg·m$^2$) | Without brake | | 0.14 | |
| | With brake | | 0.16 | |
| Recommended moment of inertia ratio of the load and the rotor Note)3 | | | 30 times or less | |
| Rotary encoder specifications Note)5 | | | 20-bit Incremental | 17-bit Absolute |
| | Resolution per single turn | | 1048576 | 131072 |

• **Brake specifications** (For details, refer to P.183)
(This brake will be released when it is energized. Do not use this for braking the motor in motion.)

| | |
|---|---|
| Static friction torque (N·m) | 1.27 or more |
| Engaging time (ms) | 50 or less |
| Releasing time (ms) Note)4 | 15 or less |
| Exciting current (DC) (A) | 0.36 |
| Releasing voltage (DC) (V) | 1 or more |
| Exciting voltage (DC) (V) | 24±1.2 |

• **Permissible load** (For details, refer to P.183)

| | | |
|---|---|---|
| During assembly | Radial load P-direction (N) | 392 |
| | Thrust load A-direction (N) | 147 |
| | Thrust load B-direction (N) | 196 |
| During operation | Radial load P-direction (N) | 245 |
| | Thrust load A, B-direction (N) | 98 |

• For details of Note 1 to Note 5, refer to P.182, P.183.
• Dimensions of Driver, refer to P.42.
*1 Motor specifications: □
*2 The product that the end of driver model designation has "E" is "Position control type". Detail of model designation, refer to P.16.
*3 ◇ in number of applicable driver represents the series. For more information about the part number, please refer to P.16.

## Torque characteristics (at AC100 V of power voltage <Dotted line represents the torque at 10 % less supply voltage.>)

Without oil seal

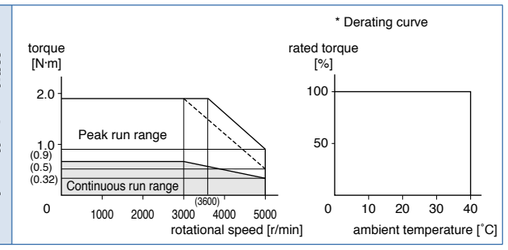


With oil seal

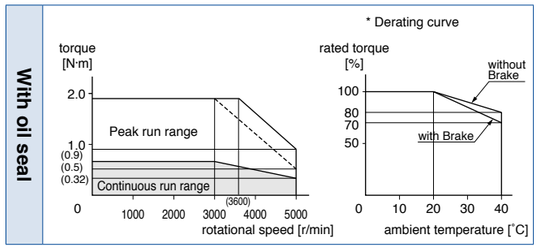


## Dimensions

<Without Brake>

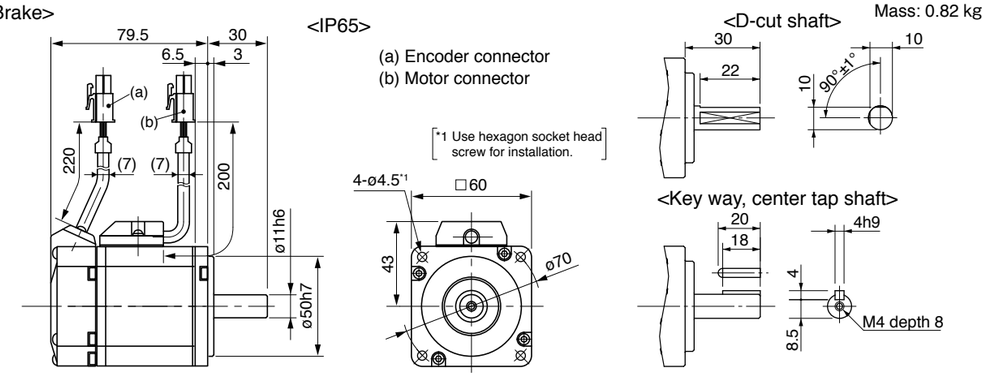


* For the dimensions with brake, refer to the right page.

[Unit: mm]

**<Cautions>** Reduce the moment of inertia ratio if high speed response operation is required.
Dimensions are subject to change without notice. Contact us or a dealer for the latest information.
Read the Instruction Manual carefully and understand all precautions and remarks before using the products.





# 200 V MSMD 200 W [Low inertia, Small capacity]

## Specifications

| | | | AC200 V | |
|---|---|---|---|---|
| Motor model *1 | IP65 | | MSMD022G1□ | MSMD022S1□ |
| | IP67 | | – | – |
| Applicable driver *2 | Model No. | A5Ⅱ, A5 series | MAD◇T1507 | |
| | | A5ⅡE, A5E series | MAD◇T1507E | – |
| | Frame symbol | | A-frame | |
| Power supply capacity (kVA) | | | 0.5 | |
| Rated output (W) | | | 200 | |
| Rated torque (N·m) | | | 0.64 | |
| Momentary Max. peak torque (N·m) | | | 1.91 | |
| Rated current (A(rms)) | | | 1.6 | |
| Max. current (A(o-p)) | | | 6.9 | |
| Regenerative brake frequency (times/min) Note)1 | Without option | | No limit Note)2 | |
| | DV0P4283 | | No limit Note)2 | |
| Rated rotational speed (r/min) | | | 3000 | |
| Max. rotational speed (r/min) | | | 5000 | |
| Moment of inertia of rotor ($\times 10^{-4}$ kg·m$^2$) | Without brake | | 0.14 | |
| | With brake | | 0.16 | |
| Recommended moment of inertia ratio of the load and the rotor Note)3 | | | 30 times or less | |
| Rotary encoder specifications Note)5 | | | 20-bit Incremental | 17-bit Absolute |
| | Resolution per single turn | | 1048576 | 131072 |

• **Brake specifications** (For details, refer to P.183)
(This brake will be released when it is energized. Do not use this for braking the motor in motion.)

| | |
|---|---|
| Static friction torque (N·m) | 1.27 or more |
| Engaging time (ms) | 50 or less |
| Releasing time (ms) Note)4 | 15 or less |
| Exciting current (DC) (A) | 0.36 |
| Releasing voltage (DC) (V) | 1 or more |
| Exciting voltage (DC) (V) | 24±1.2 |

• **Permissible load** (For details, refer to P.183)

| | | |
|---|---|---|
| During assembly | Radial load P-direction (N) | 392 |
| | Thrust load A-direction (N) | 147 |
| | Thrust load B-direction (N) | 196 |
| During operation | Radial load P-direction (N) | 245 |
| | Thrust load A, B-direction (N) | 98 |

• For details of Note 1 to Note 5, refer to P.182, P.183.
• Dimensions of Driver, refer to P.42.
*1 Motor specifications: □
*2 The product that the end of driver model designation has "E" is "Position control type". Detail of model designation, refer to P.16.
*3 ◇ in number of applicable driver represents the series. For more information about the part number, please refer to P.16.

## Torque characteristics (at AC200 V of power voltage <Dotted line represents the torque at 10 % less supply voltage.>)

Without oil seal

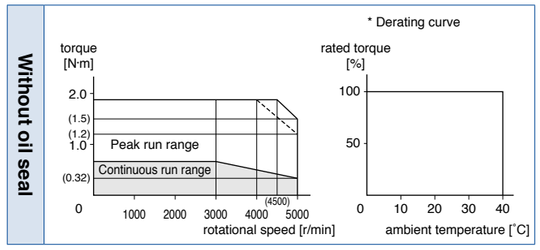


With oil seal

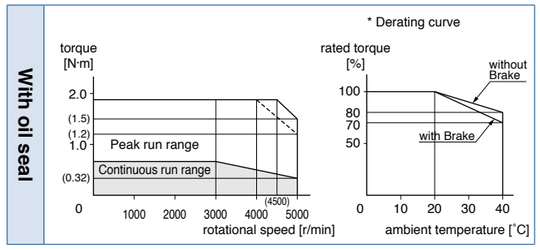


## Dimensions

<With Brake>

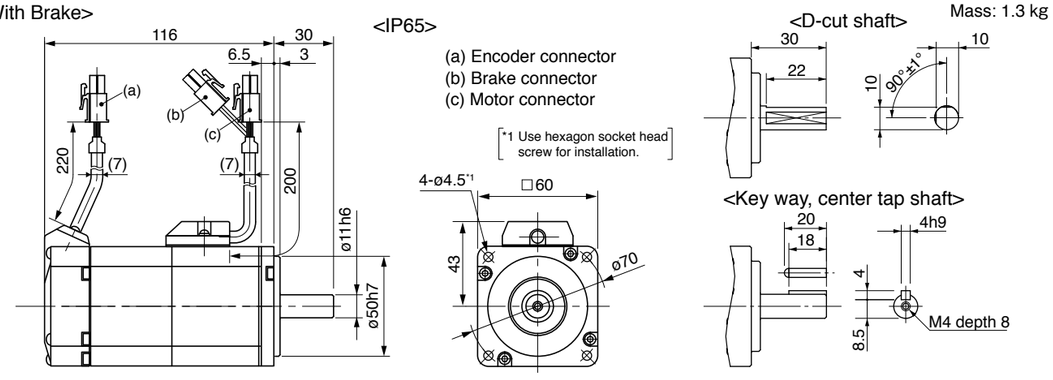


* For the dimensions without brake, refer to the left page.

[Unit: mm]

**<Cautions>** Reduce the moment of inertia ratio if high speed response operation is required.
Dimensions are subject to change without notice. Contact us or a dealer for the latest information.
Read the Instruction Manual carefully and understand all precautions and remarks before using the products.

# 100 V MSMD 400 W [Low inertia, Small capacity]

## Specifications

| | | | AC100 V | |
|---|---|---|---|---|
| Motor model *1 | IP65 | | MSMD041G1□ | MSMD041S1□ |
| | IP67 | | – | – |
| Applicable driver *2 | Model No. | A5Ⅱ, A5 series | MCD◇T3120 | |
| | | A5ⅡE, A5E series | MCD◇T3120E | – |
| | Frame symbol | | C-frame | |
| Power supply capacity (kVA) | | | 0.9 | |
| Rated output (W) | | | 400 | |
| Rated torque (N·m) | | | 1.3 | |
| Momentary Max. peak torque (N·m) | | | 3.8 | |
| Rated current (A(rms)) | | | 4.6 | |
| Max. current (A(o-p)) | | | 19.5 | |
| Regenerative brake frequency (times/min) Note)1 | Without option | | No limit Note)2 | |
| | DV0P4282 | | No limit Note)2 | |
| Rated rotational speed (r/min) | | | 3000 | |
| Max. rotational speed (r/min) | | | 5000 | |
| Moment of inertia of rotor ($\times 10^{-4}$ kg·m$^2$) | Without brake | | 0.26 | |
| | With brake | | 0.28 | |
| Recommended moment of inertia ratio of the load and the rotor Note)3 | | | 30 times or less | |
| Rotary encoder specifications Note)5 | | | 20-bit Incremental | 17-bit Absolute |
| | Resolution per single turn | | 1048576 | 131072 |

• **Brake specifications** (For details, refer to P.183)
(This brake will be released when it is energized. Do not use this for braking the motor in motion.)

| | |
|---|---|
| Static friction torque (N·m) | 1.27 or more |
| Engaging time (ms) | 50 or less |
| Releasing time (ms) Note)4 | 15 or less |
| Exciting current (DC) (A) | 0.36 |
| Releasing voltage (DC) (V) | 1 or more |
| Exciting voltage (DC) (V) | 24±1.2 |

• **Permissible load** (For details, refer to P.183)

| | | |
|---|---|---|
| During assembly | Radial load P-direction (N) | 392 |
| | Thrust load A-direction (N) | 147 |
| | Thrust load B-direction (N) | 196 |
| During operation | Radial load P-direction (N) | 245 |
| | Thrust load A, B-direction (N) | 98 |

• For details of Note 1 to Note 5, refer to P.182, P.183.
• Dimensions of Driver, refer to P.43.
*1 Motor specifications: □
*2 The product that the end of driver model designation has "E" is "Position control type". Detail of model designation, refer to P.16.
*3 ◇ in number of applicable driver represents the series. For more information about the part number, please refer to P.16.

## Torque characteristics (at AC100 V of power voltage <Dotted line represents the torque at 10 % less supply voltage.>)

Without oil seal

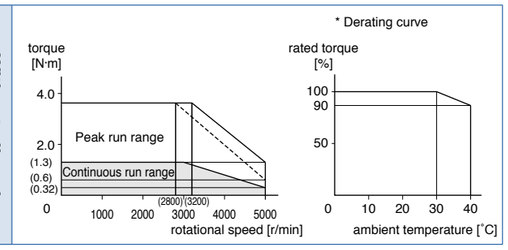


With oil seal

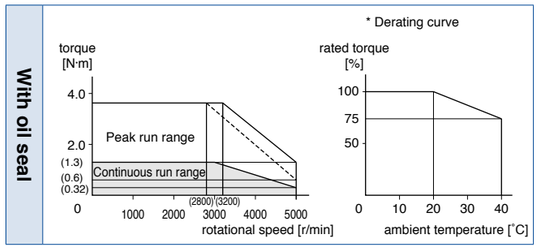


## Dimensions

<Without Brake>

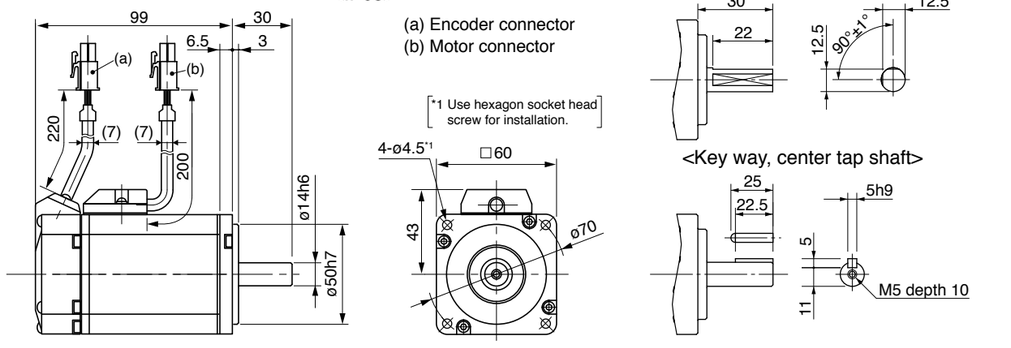


* For the dimensions with brake, refer to the right page.

[Unit: mm]

**<Cautions>** Reduce the moment of inertia ratio if high speed response operation is required.
Dimensions are subject to change without notice. Contact us or a dealer for the latest information.
Read the Instruction Manual carefully and understand all precautions and remarks before using the products.





# 200 V MSMD 400 W [Low inertia, Small capacity]

## Specifications

| | | | AC200 V | |
|---|---|---|---|---|
| Motor model *1 | IP65 | | MSMD042G1□ | MSMD042S1□ |
| | IP67 | | – | – |
| Applicable driver *2 | Model No. | A5Ⅱ, A5 series | MBD◇T2510 | |
| | | A5ⅡE, A5E series | MBD◇T2510E | – |
| | Frame symbol | | B-frame | |
| Power supply capacity (kVA) | | | 0.9 | |
| Rated output (W) | | | 400 | |
| Rated torque (N·m) | | | 1.3 | |
| Momentary Max. peak torque (N·m) | | | 3.8 | |
| Rated current (A(rms)) | | | 2.6 | |
| Max. current (A(o-p)) | | | 11.0 | |
| Regenerative brake frequency (times/min) Note)1 | Without option | | No limit Note)2 | |
| | DV0P4283 | | No limit Note)2 | |
| Rated rotational speed (r/min) | | | 3000 | |
| Max. rotational speed (r/min) | | | 5000 | |
| Moment of inertia of rotor ($\times 10^{-4}$ kg·m$^2$) | Without brake | | 0.26 | |
| | With brake | | 0.28 | |
| Recommended moment of inertia ratio of the load and the rotor Note)3 | | | 30 times or less | |
| Rotary encoder specifications Note)5 | | | 20-bit Incremental | 17-bit Absolute |
| | Resolution per single turn | | 1048576 | 131072 |

• **Brake specifications** (For details, refer to P.183)
(This brake will be released when it is energized. Do not use this for braking the motor in motion.)

| | |
|---|---|
| Static friction torque (N·m) | 1.27 or more |
| Engaging time (ms) | 50 or less |
| Releasing time (ms) Note)4 | 15 or less |
| Exciting current (DC) (A) | 0.36 |
| Releasing voltage (DC) (V) | 1 or more |
| Exciting voltage (DC) (V) | 24±1.2 |

• **Permissible load** (For details, refer to P.183)

| | | |
|---|---|---|
| During assembly | Radial load P-direction (N) | 392 |
| | Thrust load A-direction (N) | 147 |
| | Thrust load B-direction (N) | 196 |
| During operation | Radial load P-direction (N) | 245 |
| | Thrust load A, B-direction (N) | 98 |

• For details of Note 1 to Note 5, refer to P.182, P.183.
• Dimensions of Driver, refer to P.42.
*1 Motor specifications: □
*2 The product that the end of driver model designation has "E" is "Position control type". Detail of model designation, refer to P.16.
*3 ◇ in number of applicable driver represents the series. For more information about the part number, please refer to P.16.

## Torque characteristics (at AC200 V of power voltage <Dotted line represents the torque at 10 % less supply voltage.>)

Without oil seal

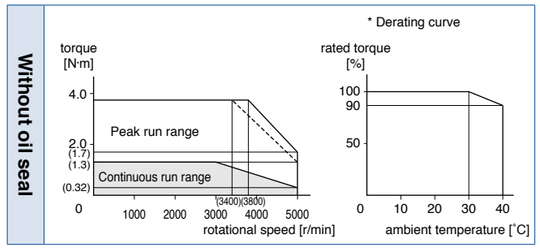


With oil seal

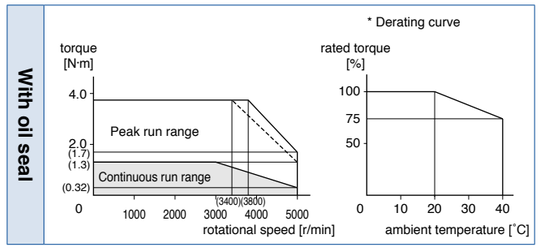


## Dimensions

<With Brake>

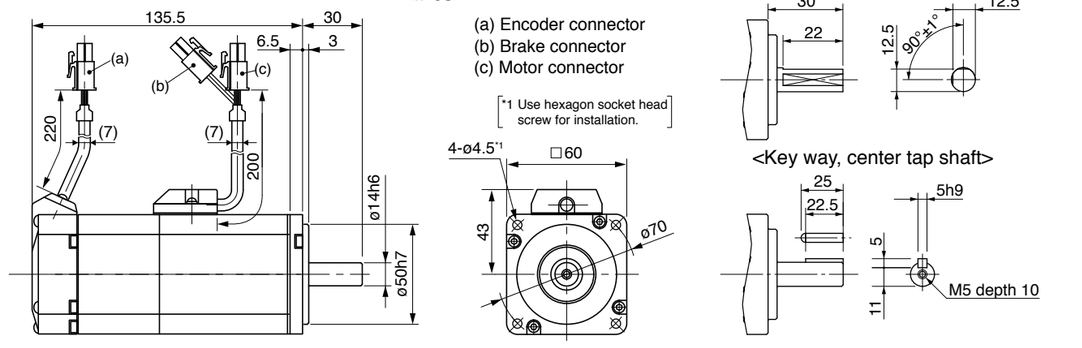


* For the dimensions without brake, refer to the left page.

[Unit: mm]

**<Cautions>** Reduce the moment of inertia ratio if high speed response operation is required.
Dimensions are subject to change without notice. Contact us or a dealer for the latest information.
Read the Instruction Manual carefully and understand all precautions and remarks before using the products.

# 200 V MSMD 750 W [Low inertia, Small capacity]

## Specifications

| | | | AC200 V | |
|---|---|---|---|---|
| Motor model *1 | IP65 | | MSMD082G1□ | MSMD082S1□ |
| | IP67 | | – | – |
| Applicable driver *2 | Model No. | A5Ⅱ, A5 series | MCD◇T3520 | |
| | | A5ⅡE, A5E series | MCD◇T3520E | – |
| | Frame symbol | | C-frame | |
| Power supply capacity (kVA) | | | 1.3 | |
| Rated output (W) | | | 750 | |
| Rated torque (N·m) | | | 2.4 | |
| Momentary Max. peak torque (N·m) | | | 7.1 | |
| Rated current (A(rms)) | | | 4.0 | |
| Max. current (A(o-p)) | | | 17.0 | |
| Regenerative brake frequency (times/min) Note)1 | Without option | | No limit Note)2 | |
| | DV0P4283 | | No limit Note)2 | |
| Rated rotational speed (r/min) | | | 3000 | |
| Max. rotational speed (r/min) | | | 4500 | |
| Moment of inertia of rotor ($\times 10^{-4}$ kg·m$^2$) | Without brake | | 0.87 | |
| | With brake | | 0.97 | |
| Recommended moment of inertia ratio of the load and the rotor Note)3 | | | 20 times or less | |
| Rotary encoder specifications Note)5 | | | 20-bit Incremental | 17-bit Absolute |
| | Resolution per single turn | | 1048576 | 131072 |

• **Brake specifications** (For details, refer to P.183)
(This brake will be released when it is energized.
Do not use this for braking the motor in motion.)

| | |
|---|---|
| Static friction torque (N·m) | 2.45 or more |
| Engaging time (ms) | 70 or less |
| Releasing time (ms) Note)4 | 20 or less |
| Exciting current (DC) (A) | 0.42 |
| Releasing voltage (DC) (V) | 1 or more |
| Exciting voltage (DC) (V) | 24±1.2 |

• **Permissible load** (For details, refer to P.183)

| | | |
|---|---|---|
| During assembly | Radial load P-direction (N) | 686 |
| | Thrust load A-direction (N) | 294 |
| | Thrust load B-direction (N) | 392 |
| During operation | Radial load P-direction (N) | 392 |
| | Thrust load A, B-direction (N) | 147 |

• For details of Note 1 to Note 5, refer to P.182, P.183.
• Dimensions of Driver, refer to P.43.
*1 Motor specifications: □
*2 The product that the end of driver model designation has "E" is "Position control type". Detail of model designation, refer to P.16.
*3 ◇ in number of applicable driver represents the series. For more information about the part number, please refer to P.16.

## Torque characteristics (at AC200 V of power voltage <Dotted line represents the torque at 10 % less supply voltage.>)

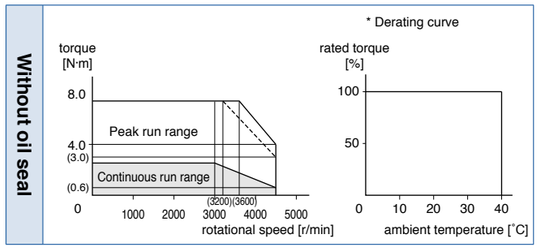


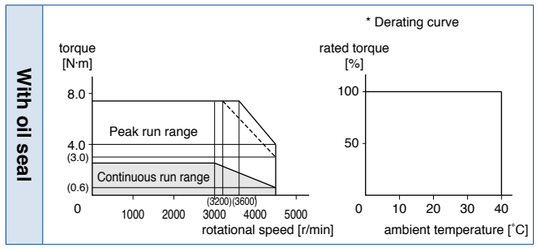


## Dimensions

Mass: Without brake/ 2.3 kg
With brake/ 3.1 kg

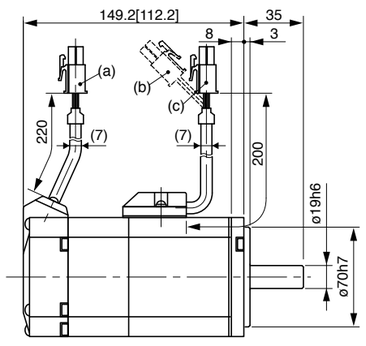


(a) Encoder connector
(b) Brake connector
(c) Motor connector

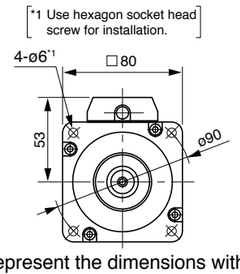


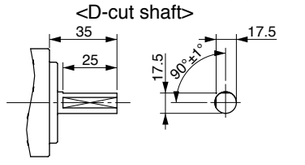


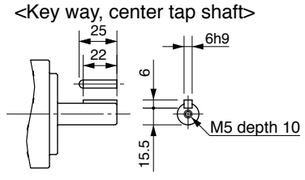


* Figures in [ ] represent the dimensions without brake.

[Unit: mm]

**<Cautions>** Reduce the moment of inertia ratio if high speed response operation is required.
Dimensions are subject to change without notice. Contact us or a dealer for the latest information.
Read the Instruction Manual carefully and understand all precautions and remarks before using the products.



MEMO

# 100 V MHMD 200 W [High inertia, Small capacity]

## Specifications

| | | | AC100 V | |
|---|---|---|---|---|
| Motor model *1 | IP65 | | MHMD021G1□ | MHMD021S1□ |
| | IP67 | | – | – |
| Applicable driver *2 | Model No. | A5Ⅱ, A5 series | MBD◇T2110 | |
| | | A5ⅡE, A5E series | MBD◇T2110E | – |
| | Frame symbol | | B-frame | |
| Power supply capacity (kVA) | | | 0.5 | |
| Rated output (W) | | | 200 | |
| Rated torque (N·m) | | | 0.64 | |
| Momentary Max. peak torque (N·m) | | | 1.91 | |
| Rated current (A(rms)) | | | 2.5 | |
| Max. current (A(o-p)) | | | 10.6 | |
| Regenerative brake frequency (times/min) Note)1 | Without option | | No limit Note)2 | |
| | DV0P4283 | | No limit Note)2 | |
| Rated rotational speed (r/min) | | | 3000 | |
| Max. rotational speed (r/min) | | | 5000 | |
| Moment of inertia of rotor ($\times 10^{-4}$ kg·m$^2$) | Without brake | | 0.42 | |
| | With brake | | 0.45 | |
| Recommended moment of inertia ratio of the load and the rotor Note)3 | | | 30 times or less | |
| Rotary encoder specifications Note)5 | | | 20-bit Incremental | 17-bit Absolute |
| | Resolution per single turn | | 1048576 | 131072 |

• **Brake specifications** (For details, refer to P.183)
(This brake will be released when it is energized.
Do not use this for braking the motor in motion.)

| | |
|---|---|
| Static friction torque (N·m) | 1.27 or more |
| Engaging time (ms) | 50 or less |
| Releasing time (ms) Note)4 | 15 or less |
| Exciting current (DC) (A) | 0.36 |
| Releasing voltage (DC) (V) | 1 or more |
| Exciting voltage (DC) (V) | 24±1.2 |

• **Permissible load** (For details, refer to P.183)

| | | |
|---|---|---|
| During assembly | Radial load P-direction (N) | 392 |
| | Thrust load A-direction (N) | 147 |
| | Thrust load B-direction (N) | 196 |
| During operation | Radial load P-direction (N) | 245 |
| | Thrust load A, B-direction (N) | 98 |

• For details of Note 1 to Note 5, refer to P.182, P.183.
• Dimensions of Driver, refer to P.42.
*1 Motor specifications: □
*2 The product that the end of driver model designation has "E" is "Position control type". Detail of model designation, refer to P.16.
*3 ◇ in number of applicable driver represents the series. For more information about the part number, please refer to P.16.

## Torque characteristics (at AC100 V of power voltage <Dotted line represents the torque at 10 % less supply voltage.>)

Without oil seal

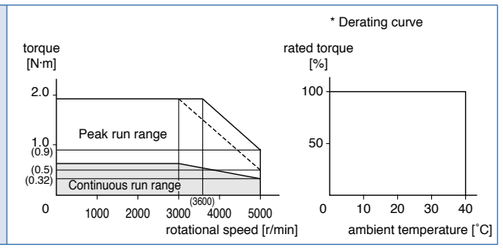


With oil seal

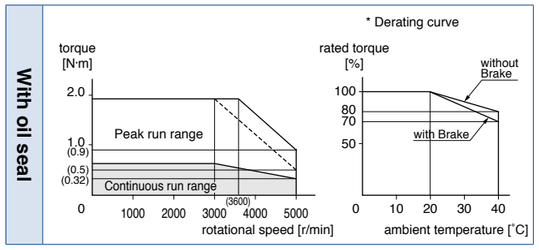


## Dimensions

<Without Brake>

Mass: 0.96 kg

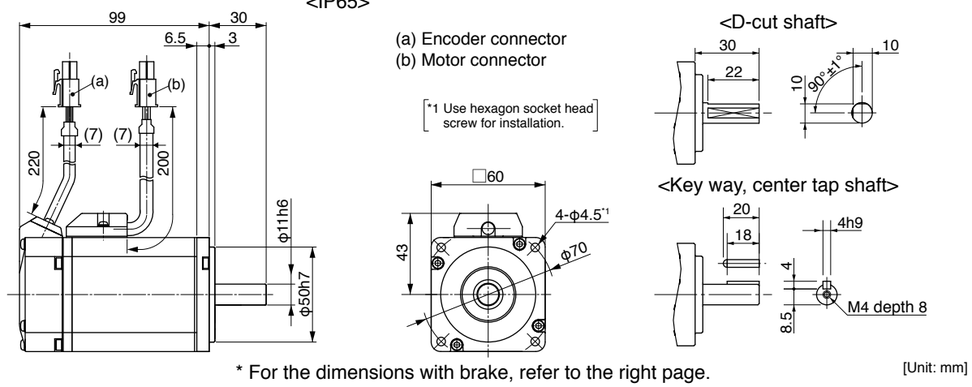


* For the dimensions with brake, refer to the right page.

[Unit: mm]

**<Cautions>** Reduce the moment of inertia ratio if high speed response operation is required.
Dimensions are subject to change without notice. Contact us or a dealer for the latest information.
Read the Instruction Manual carefully and understand all precautions and remarks before using the products.





# 200 V MHMD 200 W [High inertia, Small capacity]

## Specifications

| | | | AC200 V | |
|---|---|---|---|---|
| Motor model *1 | IP65 | | MHMD022G1□ | MHMD022S1□ |
| | IP67 | | – | – |
| Applicable driver *2 | Model No. | A5Ⅱ, A5 series | MAD◇T1507 | |
| | | A5ⅡE, A5E series | MAD◇T1507E | – |
| | Frame symbol | | A-frame | |
| Power supply capacity (kVA) | | | 0.5 | |
| Rated output (W) | | | 200 | |
| Rated torque (N·m) | | | 0.64 | |
| Momentary Max. peak torque (N·m) | | | 1.91 | |
| Rated current (A(rms)) | | | 1.6 | |
| Max. current (A(o-p)) | | | 6.9 | |
| Regenerative brake frequency (times/min) Note)1 | Without option | | No limit Note)2 | |
| | DV0P4283 | | No limit Note)2 | |
| Rated rotational speed (r/min) | | | 3000 | |
| Max. rotational speed (r/min) | | | 5000 | |
| Moment of inertia of rotor ($\times 10^{-4}$ kg·m$^2$) | Without brake | | 0.42 | |
| | With brake | | 0.45 | |
| Recommended moment of inertia ratio of the load and the rotor Note)3 | | | 30 times or less | |
| Rotary encoder specifications Note)5 | | | 20-bit Incremental | 17-bit Absolute |
| | Resolution per single turn | | 1048576 | 131072 |

• **Brake specifications** (For details, refer to P.183)
(This brake will be released when it is energized.
Do not use this for braking the motor in motion.)

| | |
|---|---|
| Static friction torque (N·m) | 1.27 or more |
| Engaging time (ms) | 50 or less |
| Releasing time (ms) Note)4 | 15 or less |
| Exciting current (DC) (A) | 0.36 |
| Releasing voltage (DC) (V) | 1 or more |
| Exciting voltage (DC) (V) | 24±1.2 |

• **Permissible load** (For details, refer to P.183)

| | | |
|---|---|---|
| During assembly | Radial load P-direction (N) | 392 |
| | Thrust load A-direction (N) | 147 |
| | Thrust load B-direction (N) | 196 |
| During operation | Radial load P-direction (N) | 245 |
| | Thrust load A, B-direction (N) | 98 |

• For details of Note 1 to Note 5, refer to P.182, P.183.
• Dimensions of Driver, refer to P.42.
*1 Motor specifications: □
*2 The product that the end of driver model designation has "E" is "Position control type". Detail of model designation, refer to P.16.
*3 ◇ in number of applicable driver represents the series. For more information about the part number, please refer to P.16.

## Torque characteristics (at AC200 V of power voltage <Dotted line represents the torque at 10 % less supply voltage.>)

Without oil seal

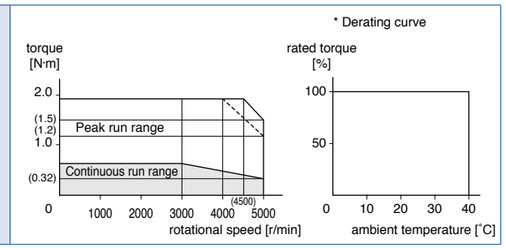


With oil seal

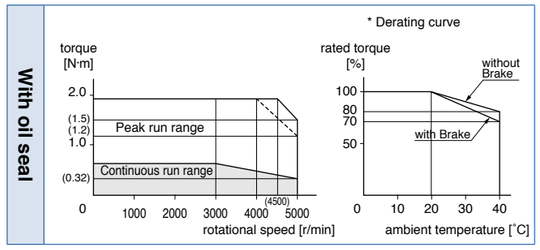


## Dimensions

<With Brake>

Mass: 1.4 kg

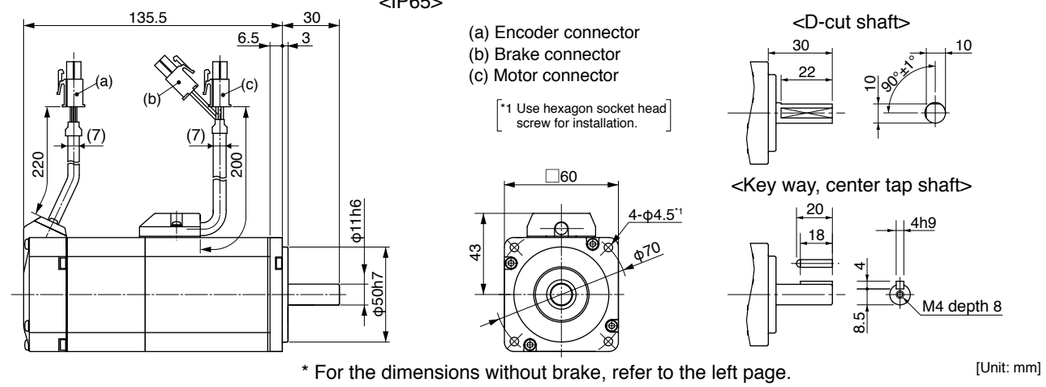


* For the dimensions without brake, refer to the left page.

[Unit: mm]

**<Cautions>** Reduce the moment of inertia ratio if high speed response operation is required.
Dimensions are subject to change without notice. Contact us or a dealer for the latest information.
Read the Instruction Manual carefully and understand all precautions and remarks before using the products.

# 100 V MHMD 400 W [High inertia, Small capacity]

## Specifications

| | | | AC100 V | |
|---|---|---|---|---|
| Motor model *1 | IP65 | | MHMD041G1□ | MHMD041S1□ |
| | IP67 | | – | – |
| Applicable driver *2 | Model No. | A5Ⅱ, A5 series | MCD◇T3120 | |
| | | A5ⅡE, A5E series | MCD◇T3120E | – |
| | Frame symbol | | C-frame | |
| Power supply capacity (kVA) | | | 0.9 | |
| Rated output (W) | | | 400 | |
| Rated torque (N·m) | | | 1.3 | |
| Momentary Max. peak torque (N·m) | | | 3.8 | |
| Rated current (A(rms)) | | | 4.6 | |
| Max. current (A(o-p)) | | | 19.5 | |
| Regenerative brake frequency (times/min) Note)1 | Without option | | No limit Note)2 | |
| | DV0P4282 | | No limit Note)2 | |
| Rated rotational speed (r/min) | | | 3000 | |
| Max. rotational speed (r/min) | | | 5000 | |
| Moment of inertia of rotor ($\times 10^{-4}$ kg·m$^2$) | Without brake | | 0.67 | |
| | With brake | | 0.70 | |
| Recommended moment of inertia ratio of the load and the rotor Note)3 | | | 30 times or less | |
| Rotary encoder specifications Note)5 | | | 20-bit Incremental | 17-bit Absolute |
| | Resolution per single turn | | 1048576 | 131072 |

• **Brake specifications** (For details, refer to P.183)
(This brake will be released when it is energized. Do not use this for braking the motor in motion.)

| | |
|---|---|
| Static friction torque (N·m) | 1.27 or more |
| Engaging time (ms) | 50 or less |
| Releasing time (ms) Note)4 | 15 or less |
| Exciting current (DC) (A) | 0.36 |
| Releasing voltage (DC) (V) | 1 or more |
| Exciting voltage (DC) (V) | 24±1.2 |

• **Permissible load** (For details, refer to P.183)

| | | |
|---|---|---|
| During assembly | Radial load P-direction (N) | 392 |
| | Thrust load A-direction (N) | 147 |
| | Thrust load B-direction (N) | 196 |
| During operation | Radial load P-direction (N) | 245 |
| | Thrust load A, B-direction (N) | 98 |

• For details of Note 1 to Note 5, refer to P.182, P.183.
• Dimensions of Driver, refer to P.43.
*1 Motor specifications: □
*2 The product that the end of driver model designation has "E" is "Position control type". Detail of model designation, refer to P.16.
*3 ◇ in number of applicable driver represents the series. For more information about the part number, please refer to P.16.

## Torque characteristics (at AC100 V of power voltage <Dotted line represents the torque at 10 % less supply voltage.>)

Without oil seal

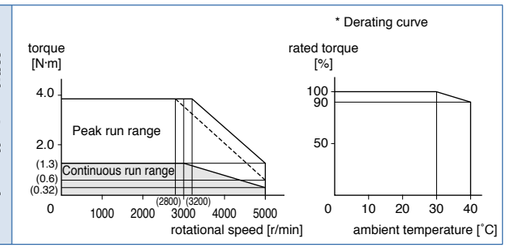


With oil seal

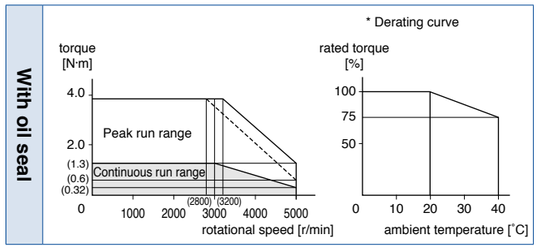


## Dimensions

<Without Brake> <IP65>

Mass: 1.4 kg

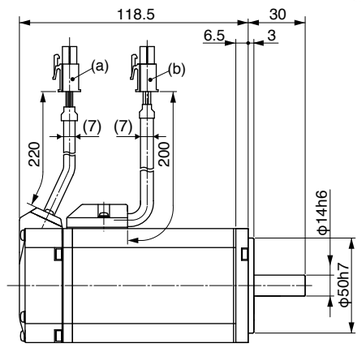


(a) Encoder connector
(b) Motor connector

[*1 Use hexagon socket head screw for installation.]

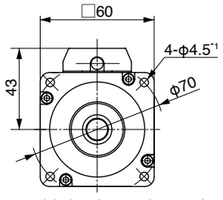


<D-cut shaft>

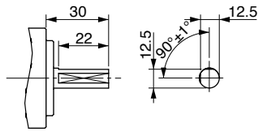


<Key way, center tap shaft>

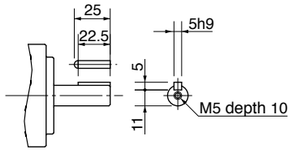


* For the dimensions with brake, refer to the right page.

[Unit: mm]

**<Cautions>** Reduce the moment of inertia ratio if high speed response operation is required.
Dimensions are subject to change without notice. Contact us or a dealer for the latest information.
Read the Instruction Manual carefully and understand all precautions and remarks before using the products.





# 200 V MHMD 400 W [High inertia, Small capacity]

## Specifications

| | | | AC200 V | |
|---|---|---|---|---|
| Motor model *1 | IP65 | | MHMD042G1□ | MHMD042S1□ |
| | IP67 | | – | – |
| Applicable driver *2 | Model No. | A5Ⅱ, A5 series | MBD◇T2510 | |
| | | A5ⅡE, A5E series | MBD◇T2510E | – |
| | Frame symbol | | B-frame | |
| Power supply capacity (kVA) | | | 0.9 | |
| Rated output (W) | | | 400 | |
| Rated torque (N·m) | | | 1.3 | |
| Momentary Max. peak torque (N·m) | | | 3.8 | |
| Rated current (A(rms)) | | | 2.6 | |
| Max. current (A(o-p)) | | | 11.0 | |
| Regenerative brake frequency (times/min) Note)1 | Without option | | No limit Note)2 | |
| | DV0P4283 | | No limit Note)2 | |
| Rated rotational speed (r/min) | | | 3000 | |
| Max. rotational speed (r/min) | | | 5000 | |
| Moment of inertia of rotor ($\times 10^{-4}$ kg·m$^2$) | Without brake | | 0.67 | |
| | With brake | | 0.70 | |
| Recommended moment of inertia ratio of the load and the rotor Note)3 | | | 30 times or less | |
| Rotary encoder specifications Note)5 | | | 20-bit Incremental | 17-bit Absolute |
| | Resolution per single turn | | 1048576 | 131072 |

• **Brake specifications** (For details, refer to P.183)
(This brake will be released when it is energized. Do not use this for braking the motor in motion.)

| | |
|---|---|
| Static friction torque (N·m) | 1.27 or more |
| Engaging time (ms) | 50 or less |
| Releasing time (ms) Note)4 | 15 or less |
| Exciting current (DC) (A) | 0.36 |
| Releasing voltage (DC) (V) | 1 or more |
| Exciting voltage (DC) (V) | 24±1.2 |

• **Permissible load** (For details, refer to P.183)

| | | |
|---|---|---|
| During assembly | Radial load P-direction (N) | 392 |
| | Thrust load A-direction (N) | 147 |
| | Thrust load B-direction (N) | 196 |
| During operation | Radial load P-direction (N) | 245 |
| | Thrust load A, B-direction (N) | 98 |

• For details of Note 1 to Note 5, refer to P.182, P.183.
• Dimensions of Driver, refer to P.42.
*1 Motor specifications: □
*2 The product that the end of driver model designation has "E" is "Position control type". Detail of model designation, refer to P.16.
*3 ◇ in number of applicable driver represents the series. For more information about the part number, please refer to P.16.

## Torque characteristics (at AC200 V of power voltage <Dotted line represents the torque at 10 % less supply voltage.>)

Without oil seal

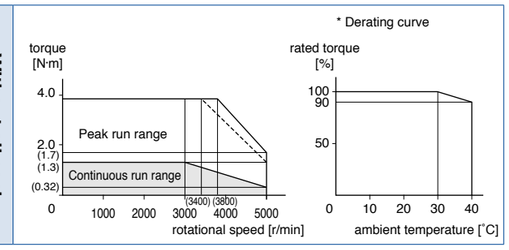


With oil seal

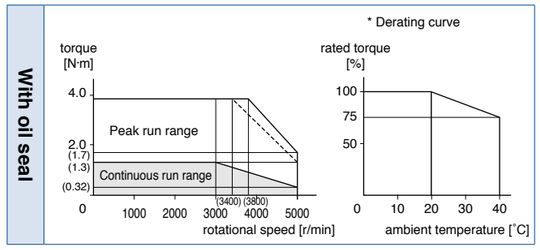


## Dimensions

<With Brake> <IP65>

Mass: 1.8 kg

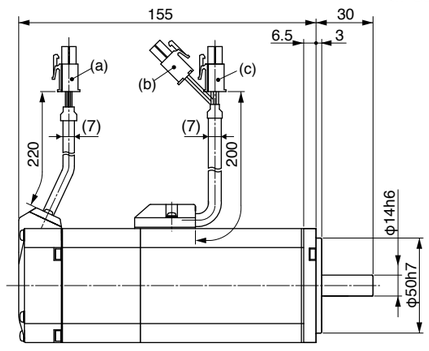


(a) Encoder connector
(b) Brake connector
(c) Motor connector

[*1 Use hexagon socket head screw for installation.]

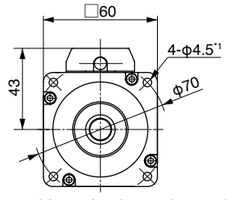


<D-cut shaft>

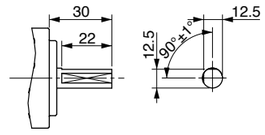


<Key way, center tap shaft>

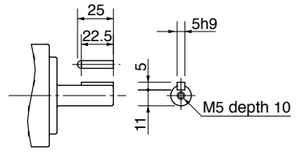


* For the dimensions without brake, refer to the left page.

[Unit: mm]

**<Cautions>** Reduce the moment of inertia ratio if high speed response operation is required.
Dimensions are subject to change without notice. Contact us or a dealer for the latest information.
Read the Instruction Manual carefully and understand all precautions and remarks before using the products.

# 200 V MHMD 750 W [High inertia, Small capacity]

## Specifications

| | | | AC200 V | |
|---|---|---|---|---|
| Motor model *1 | IP65 | | MHMD082G1□ | MHMD082S1□ |
| | IP67 | | – | – |
| Applicable driver *2 | Model No. | A5Ⅱ, A5 series | MCD◇T3520 | |
| | | A5ⅡE, A5E series | MCD◇T3520E | – |
| | Frame symbol | | C-frame | |
| Power supply capacity (kVA) | | | 1.3 | |
| Rated output (W) | | | 750 | |
| Rated torque (N·m) | | | 2.4 | |
| Momentary Max. peak torque (N·m) | | | 7.1 | |
| Rated current (A(rms)) | | | 4.0 | |
| Max. current (A(o-p)) | | | 17.0 | |
| Regenerative brake frequency (times/min) Note)1 | Without option | | No limit Note)2 | |
| | DV0P4283 | | No limit Note)2 | |
| Rated rotational speed (r/min) | | | 3000 | |
| Max. rotational speed (r/min) | | | 4500 | |
| Moment of inertia of rotor ($\times 10^{-4}$ kg·m$^2$) | Without brake | | 1.51 | |
| | With brake | | 1.61 | |
| Recommended moment of inertia ratio of the load and the rotor Note)3 | | | 20 times or less | |
| Rotary encoder specifications Note)5 | | | 20-bit Incremental | 17-bit Absolute |
| | Resolution per single turn | | 1048576 | 131072 |

• **Brake specifications** (For details, refer to P.183)
(This brake will be released when it is energized.
Do not use this for braking the motor in motion.)

| | |
|---|---|
| Static friction torque (N·m) | 2.45 or more |
| Engaging time (ms) | 70 or less |
| Releasing time (ms) Note)4 | 20 or less |
| Exciting current (DC) (A) | 0.42 |
| Releasing voltage (DC) (V) | 1 or more |
| Exciting voltage (DC) (V) | 24±1.2 |

• **Permissible load** (For details, refer to P.183)

| | | |
|---|---|---|
| During assembly | Radial load P-direction (N) | 686 |
| | Thrust load A-direction (N) | 294 |
| | Thrust load B-direction (N) | 392 |
| During operation | Radial load P-direction (N) | 392 |
| | Thrust load A, B-direction (N) | 147 |

• For details of Note 1 to Note 5, refer to P.182, P.183.
• Dimensions of Driver, refer to P.43.
*1 Motor specifications: □
*2 The product that the end of driver model designation has "E" is "Position control type". Detail of model designation, refer to P.16.
*3 ◇ in number of applicable driver represents the series. For more information about the part number, please refer to P.16.

## Torque characteristics (at AC200 V of power voltage <Dotted line represents the torque at 10 % less supply voltage.>)

Without oil seal

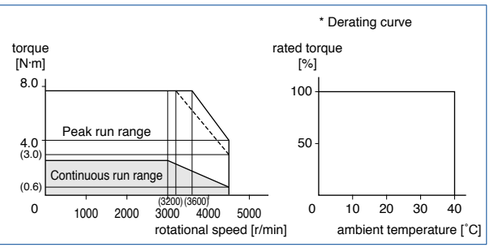


With oil seal

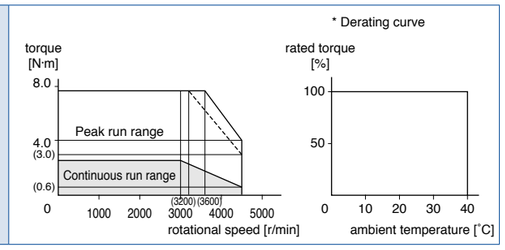


## Dimensions

Mass: Without brake/ 2.5 kg
With brake/ 3.5 kg

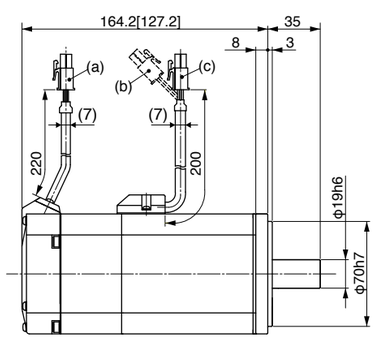


(a) Encoder connector
(b) Brake connector
(c) Motor connector

[*1 Use hexagon socket head screw for installation.]

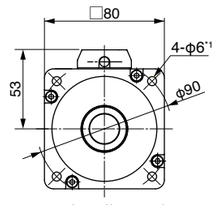


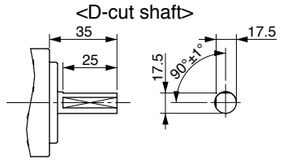


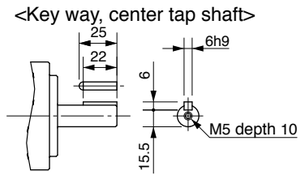


[Unit: mm]

* Figures in [ ] represent the dimensions without brake.

**<Cautions>** Reduce the moment of inertia ratio if high speed response operation is required.
Dimensions are subject to change without notice. Contact us or a dealer for the latest information.
Read the Instruction Manual carefully and understand all precautions and remarks before using the products.



MEMO

# 100 V MSME 50 W [Low inertia, Small capacity]

## Specifications

| | | | AC100 V | |
|---|---|---|---|---|
| Motor model *1 | IP65 | | – | – |
| | IP67 | | MSME5AZG1□ | MSME5AZS1□ |
| Applicable driver *2 | Model No. | A5Ⅱ, A5 series | MAD◇T1105 | |
| | | A5ⅡE, A5E series | MAD◇T1105E | – |
| | Frame symbol | | A-frame | |
| Power supply capacity (kVA) | | | 0.4 | |
| Rated output (W) | | | 50 | |
| Rated torque (N·m) | | | 0.16 | |
| Momentary Max. peak torque (N·m) | | | 0.48 | |
| Rated current (A(rms)) | | | 1.1 | |
| Max. current (A(o-p)) | | | 4.7 | |
| Regenerative brake frequency (times/min) Note)1 | Without option | | No limit Note)2 | |
| | DV0P4280 | | No limit Note)2 | |
| Rated rotational speed (r/min) | | | 3000 | |
| Max. rotational speed (r/min) | | | 6000 | |
| Moment of inertia of rotor ($\times10^{-4}$ kg·m$^2$) | Without brake | | 0.025 | |
| | With brake | | 0.027 | |
| Recommended moment of inertia ratio of the load and the rotor Note)3 | | | 30 times or less | |
| Rotary encoder specifications Note)5 | | | 20-bit Incremental | 17-bit Absolute |
| | Resolution per single turn | | 1048576 | 131072 |

• **Brake specifications** (For details, refer to P.183)
(This brake will be released when it is energized. Do not use this for braking the motor in motion.)

| | |
|---|---|
| Static friction torque (N·m) | 0.29 or more |
| Engaging time (ms) | 35 or less |
| Releasing time (ms) Note)4 | 20 or less |
| Exciting current (DC) (A) | 0.3 |
| Releasing voltage (DC) (V) | 1 or more |
| Exciting voltage (DC) (V) | 24±1.2 |

• **Permissible load** (For details, refer to P.183)

| | | |
|---|---|---|
| During assembly | Radial load P-direction (N) | 147 |
| | Thrust load A-direction (N) | 88 |
| | Thrust load B-direction (N) | 117.6 |
| During operation | Radial load P-direction (N) | 68.6 |
| | Thrust load A, B-direction (N) | 58.8 |

• For details of Note 1 to Note 5, refer to P.182, P.183.
• Dimensions of Driver, refer to P.42.
*1 Motor specifications: □
*2 The product that the end of driver model designation has "E" is "Position control type". Detail of model designation, refer to P.16.
*3 ◇ in number of applicable driver represents the series. For more information about the part number, please refer to P.16.

## Torque characteristics (at AC100 V of power voltage <Dotted line represents the torque at 10 % less supply voltage.>)

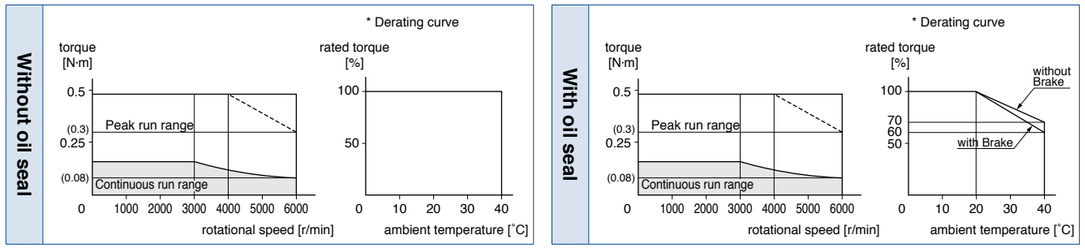


## Dimensions <In Case of Without Brake, Cable direction to output shaft.>

• Motor cables for opposite to output shaft cannot be used with 50 W motor.

Mass: 0.31 kg

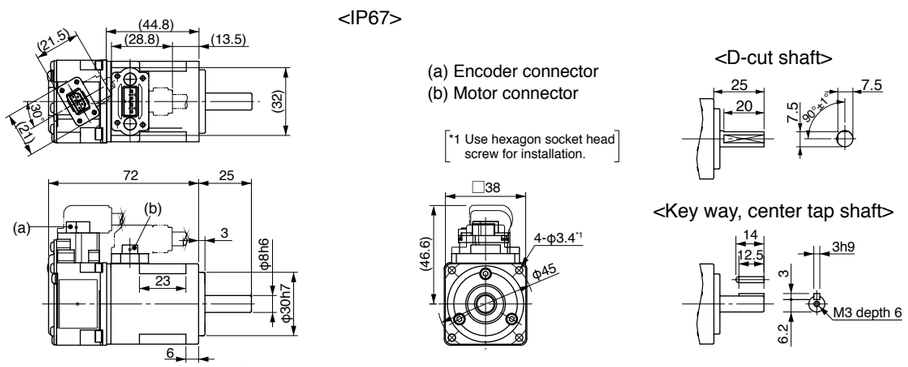


* For the dimensions with brake, refer to the right page.

[Unit: mm]

**<Cautions>** Reduce the moment of inertia ratio if high speed response operation is required.
Dimensions are subject to change without notice. Contact us or a dealer for the latest information.
Read the Instruction Manual carefully and understand all precautions and remarks before using the products.





# 200 V MSME 50 W [Low inertia, Small capacity]

## Specifications

| | | | AC200 V | |
|---|---|---|---|---|
| Motor model *1 | IP65 | | – | – |
| | IP67 | | MSME5AZG1□ | MSME5AZS1□ |
| Applicable driver *2 | Model No. | A5Ⅱ, A5 series | MAD◇T1505 | |
| | | A5ⅡE, A5E series | MAD◇T1505E | – |
| | Frame symbol | | A-frame | |
| Power supply capacity (kVA) | | | 0.5 | |
| Rated output (W) | | | 50 | |
| Rated torque (N·m) | | | 0.16 | |
| Momentary Max. peak torque (N·m) | | | 0.48 | |
| Rated current (A(rms)) | | | 1.1 | |
| Max. current (A(o-p)) | | | 4.7 | |
| Regenerative brake frequency (times/min) Note)1 | Without option | | No limit Note)2 | |
| | DV0P4280 | | No limit Note)2 | |
| Rated rotational speed (r/min) | | | 3000 | |
| Max. rotational speed (r/min) | | | 6000 | |
| Moment of inertia of rotor ($\times10^{-4}$ kg·m$^2$) | Without brake | | 0.025 | |
| | With brake | | 0.027 | |
| Recommended moment of inertia ratio of the load and the rotor Note)3 | | | 30 times or less | |
| Rotary encoder specifications Note)5 | | | 20-bit Incremental | 17-bit Absolute |
| | Resolution per single turn | | 1048576 | 131072 |

• **Brake specifications** (For details, refer to P.183)
(This brake will be released when it is energized. Do not use this for braking the motor in motion.)

| | |
|---|---|
| Static friction torque (N·m) | 0.29 or more |
| Engaging time (ms) | 35 or less |
| Releasing time (ms) Note)4 | 20 or less |
| Exciting current (DC) (A) | 0.3 |
| Releasing voltage (DC) (V) | 1 or more |
| Exciting voltage (DC) (V) | 24±1.2 |

• **Permissible load** (For details, refer to P.183)

| | | |
|---|---|---|
| During assembly | Radial load P-direction (N) | 147 |
| | Thrust load A-direction (N) | 88 |
| | Thrust load B-direction (N) | 117.6 |
| During operation | Radial load P-direction (N) | 68.6 |
| | Thrust load A, B-direction (N) | 58.8 |

• For details of Note 1 to Note 5, refer to P.182, P.183.
• Dimensions of Driver, refer to P.42.
*1 Motor specifications: □
*2 The product that the end of driver model designation has "E" is "Position control type". Detail of model designation, refer to P.16.
*3 ◇ in number of applicable driver represents the series. For more information about the part number, please refer to P.16.

## Torque characteristics (at AC200V of power voltage)

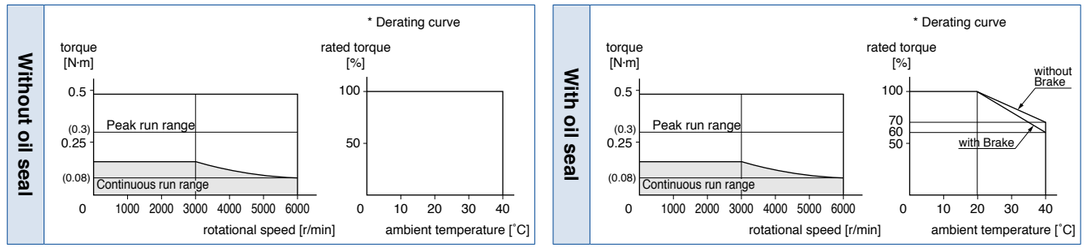


## Dimensions <In Case of With Brake, Cable direction to output shaft.>

• Motor cables for opposite to output shaft cannot be used with 50 W motor.

Mass: 0.51 kg

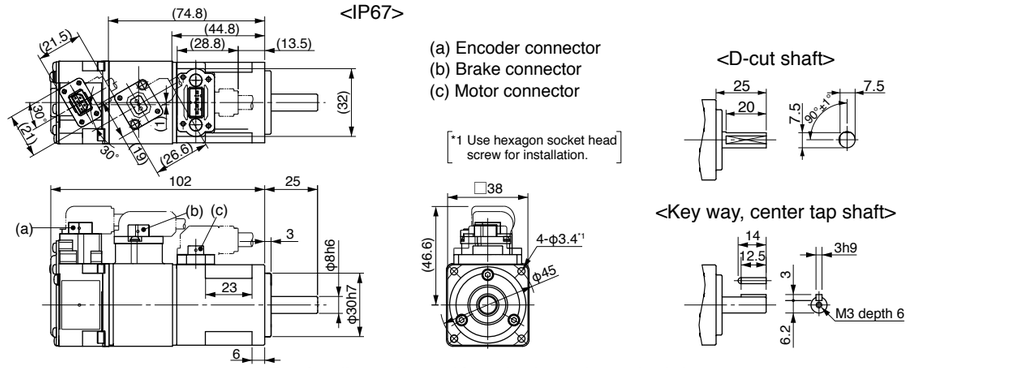


* For the dimensions without brake, refer to the left page.

[Unit: mm]

**<Cautions>** Reduce the moment of inertia ratio if high speed response operation is required.
Dimensions are subject to change without notice. Contact us or a dealer for the latest information.
Read the Instruction Manual carefully and understand all precautions and remarks before using the products.

# 100 V MSME 100 W [Low inertia, Small capacity]

## Specifications

| | | | AC100 V | |
|---|---|---|---|---|
| Motor model *1 | IP65 | | – | – |
| | IP67 | | MSME011G1□ | MSME011S1□ |
| Applicable driver *2 | Model No. | A5Ⅱ, A5 series | MAD◇T1107 | |
| | | A5ⅡE, A5E series | MAD◇T1107E | – |
| | Frame symbol | | A-frame | |
| Power supply capacity (kVA) | | | 0.4 | |
| Rated output (W) | | | 100 | |
| Rated torque (N·m) | | | 0.32 | |
| Momentary Max. peak torque (N·m) | | | 0.95 | |
| Rated current (A(rms)) | | | 1.6 | |
| Max. current (A(o-p)) | | | 6.9 | |
| Regenerative brake frequency (times/min) Note)1 | Without option | | No limit Note)2 | |
| | DV0P4280 | | No limit Note)2 | |
| Rated rotational speed (r/min) | | | 3000 | |
| Max. rotational speed (r/min) | | | 6000 | |
| Moment of inertia of rotor ($\times 10^{-4}$ kg·m$^2$) | Without brake | | 0.051 | |
| | With brake | | 0.054 | |
| Recommended moment of inertia ratio of the load and the rotor Note)3 | | | 30 times or less | |
| Rotary encoder specifications Note)5 | | | 20-bit Incremental | 17-bit Absolute |
| | Resolution per single turn | | 1048576 | 131072 |

• **Brake specifications** (For details, refer to P.183)
(This brake will be released when it is energized. Do not use this for braking the motor in motion.)

| | |
|---|---|
| Static friction torque (N·m) | 0.29 or more |
| Engaging time (ms) | 35 or less |
| Releasing time (ms) Note)4 | 20 or less |
| Exciting current (DC) (A) | 0.3 |
| Releasing voltage (DC) (V) | 1 or more |
| Exciting voltage (DC) (V) | 24±1.2 |

• **Permissible load** (For details, refer to P.183)

| | | |
|---|---|---|
| During assembly | Radial load P-direction (N) | 147 |
| | Thrust load A-direction (N) | 88 |
| | Thrust load B-direction (N) | 117.6 |
| During operation | Radial load P-direction (N) | 68.6 |
| | Thrust load A, B-direction (N) | 58.8 |

• For details of Note 1 to Note 5, refer to P.182, P.183.
• Dimensions of Driver, refer to P.42.
*1 Motor specifications: □
*2 The product that the end of driver model designation has "E" is "Position control type". Detail of model designation, refer to P.16.
*3 ◇ in number of applicable driver represents the series. For more information about the part number, please refer to P.16.

## Torque characteristics (at AC100 V of power voltage <Dotted line represents the torque at 10 % less supply voltage.>)

Without oil seal

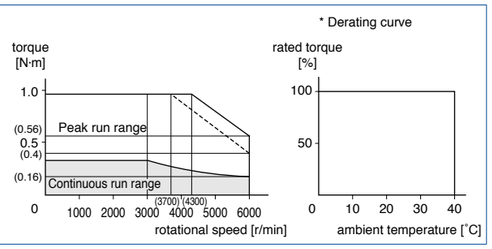


With oil seal

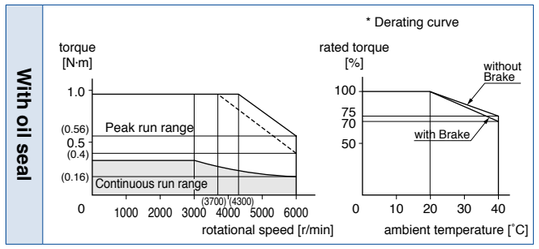


## Dimensions <In Case of Without Brake, Cable direction to output shaft.>

• Motor cables for opposite to output shaft cannot be used with 100 W motor.

Mass: 0.46 kg

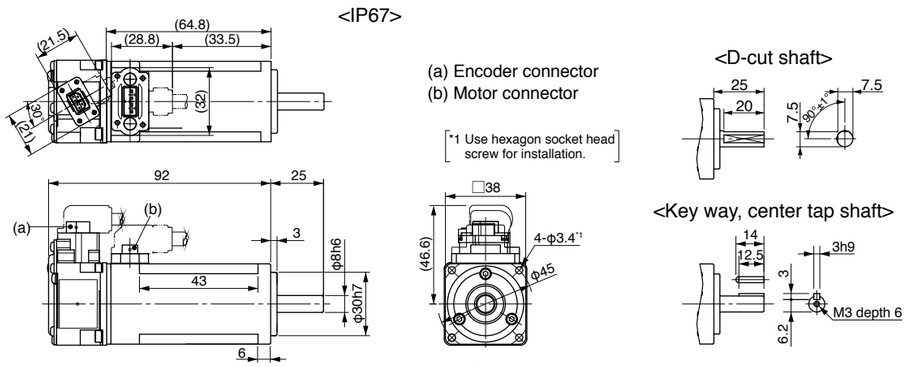


* For the dimensions with brake, refer to the right page.

[Unit: mm]

**<Cautions>** Reduce the moment of inertia ratio if high speed response operation is required.
Dimensions are subject to change without notice. Contact us or a dealer for the latest information.
Read the Instruction Manual carefully and understand all precautions and remarks before using the products.





# 200 V MSME 100 W [Low inertia, Small capacity]

## Specifications

| | | | AC200 V | |
|---|---|---|---|---|
| Motor model *1 | IP65 | | – | – |
| | IP67 | | MSME012G1□ | MSME012S1□ |
| Applicable driver *2 | Model No. | A5Ⅱ, A5 series | MAD◇T1505 | |
| | | A5ⅡE, A5E series | MAD◇T1505E | – |
| | Frame symbol | | A-frame | |
| Power supply capacity (kVA) | | | 0.5 | |
| Rated output (W) | | | 100 | |
| Rated torque (N·m) | | | 0.32 | |
| Momentary Max. peak torque (N·m) | | | 0.95 | |
| Rated current (A(rms)) | | | 1.1 | |
| Max. current (A(o-p)) | | | 4.7 | |
| Regenerative brake frequency (times/min) Note)1 | Without option | | No limit Note)2 | |
| | DV0P4280 | | No limit Note)2 | |
| Rated rotational speed (r/min) | | | 3000 | |
| Max. rotational speed (r/min) | | | 6000 | |
| Moment of inertia of rotor ($\times 10^{-4}$ kg·m$^2$) | Without brake | | 0.051 | |
| | With brake | | 0.054 | |
| Recommended moment of inertia ratio of the load and the rotor Note)3 | | | 30 times or less | |
| Rotary encoder specifications Note)5 | | | 20-bit Incremental | 17-bit Absolute |
| | Resolution per single turn | | 1048576 | 131072 |

• **Brake specifications** (For details, refer to P.183)
(This brake will be released when it is energized. Do not use this for braking the motor in motion.)

| | |
|---|---|
| Static friction torque (N·m) | 0.29 or more |
| Engaging time (ms) | 35 or less |
| Releasing time (ms) Note)4 | 20 or less |
| Exciting current (DC) (A) | 0.3 |
| Releasing voltage (DC) (V) | 1 or more |
| Exciting voltage (DC) (V) | 24±1.2 |

• **Permissible load** (For details, refer to P.183)

| | | |
|---|---|---|
| During assembly | Radial load P-direction (N) | 147 |
| | Thrust load A-direction (N) | 88 |
| | Thrust load B-direction (N) | 117.6 |
| During operation | Radial load P-direction (N) | 68.6 |
| | Thrust load A, B-direction (N) | 58.8 |

• For details of Note 1 to Note 5, refer to P.182, P.183.
• Dimensions of Driver, refer to P.42.
*1 Motor specifications: □
*2 The product that the end of driver model designation has "E" is "Position control type". Detail of model designation, refer to P.16.
*3 ◇ in number of applicable driver represents the series. For more information about the part number, please refer to P.16.

## Torque characteristics (at AC200 V of power voltage <Dotted line represents the torque at 10 % less supply voltage.>)

Without oil seal

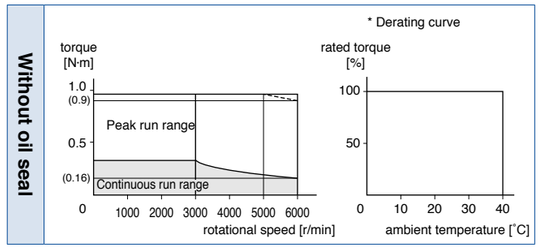


With oil seal

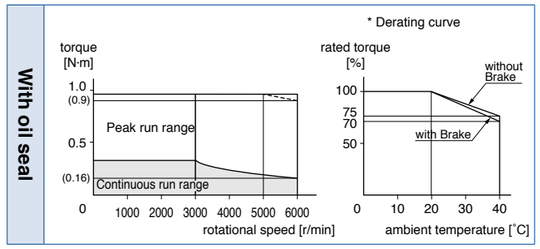


## Dimensions <In Case of With Brake, Cable direction to output shaft.>

• Motor cables for opposite to output shaft cannot be used with 100 W motor.

Mass: 0.66 kg

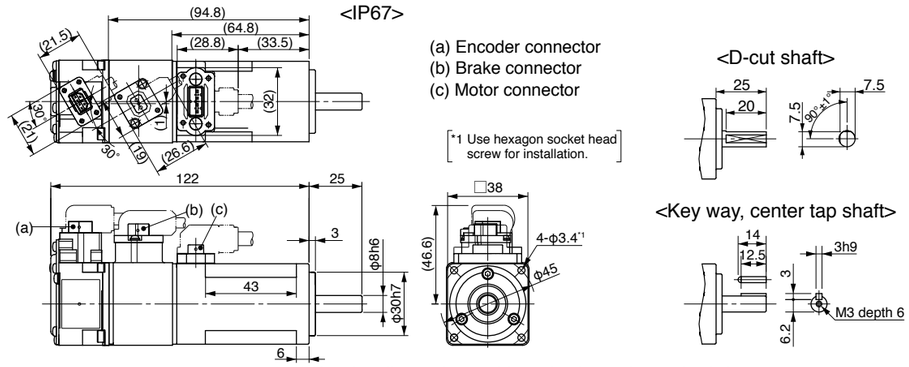


* For the dimensions without brake, refer to the left page.

[Unit: mm]

**<Cautions>** Reduce the moment of inertia ratio if high speed response operation is required.
Dimensions are subject to change without notice. Contact us or a dealer for the latest information.
Read the Instruction Manual carefully and understand all precautions and remarks before using the products.

# 100 V MSME 200 W [Low inertia, Small capacity]

## Specifications

| | | | AC100 V | |
|---|---|---|---|---|
| Motor model *1 | IP65 | | – | – |
| | IP67 | | MSME021G1□ | MSME021S1□ |
| Applicable driver *2 | Model No. | A5Ⅱ, A5 series | MBD◇T2110 | |
| | | A5ⅡE, A5E series | MBD◇T2110E | – |
| | Frame symbol | | B-frame | |
| Power supply capacity (kVA) | | | 0.5 | |
| Rated output (W) | | | 200 | |
| Rated torque (N·m) | | | 0.64 | |
| Momentary Max. peak torque (N·m) | | | 1.91 | |
| Rated current (A(rms)) | | | 2.5 | |
| Max. current (A(o-p)) | | | 10.6 | |
| Regenerative brake frequency (times/min) Note)1 | Without option | | No limit Note)2 | |
| | DV0P4283 | | No limit Note)2 | |
| Rated rotational speed (r/min) | | | 3000 | |
| Max. rotational speed (r/min) | | | 6000 | |
| Moment of inertia of rotor ($\times 10^{-4}$ kg·m$^2$) | Without brake | | 0.14 | |
| | With brake | | 0.16 | |
| Recommended moment of inertia ratio of the load and the rotor Note)3 | | | 30 times or less | |
| Rotary encoder specifications Note)5 | | | 20-bit Incremental | 17-bit Absolute |
| | Resolution per single turn | | 1048576 | 131072 |

• **Brake specifications** (For details, refer to P.183)
(This brake will be released when it is energized. Do not use this for braking the motor in motion.)

| | |
|---|---|
| Static friction torque (N·m) | 1.27 or more |
| Engaging time (ms) | 50 or less |
| Releasing time (ms) Note)4 | 15 or less |
| Exciting current (DC) (A) | 0.36 |
| Releasing voltage (DC) (V) | 1 or more |
| Exciting voltage (DC) (V) | 24±1.2 |

• **Permissible load** (For details, refer to P.183)

| | | |
|---|---|---|
| During assembly | Radial load P-direction (N) | 392 |
| | Thrust load A-direction (N) | 147 |
| | Thrust load B-direction (N) | 196 |
| During operation | Radial load P-direction (N) | 245 |
| | Thrust load A, B-direction (N) | 98 |

• For details of Note 1 to Note 5, refer to P.182, P.183.
• Dimensions of Driver, refer to P.42.
*1 Motor specifications: □
*2 The product that the end of driver model designation has "E" is "Position control type". Detail of model designation, refer to P.16.
*3 ◇ in number of applicable driver represents the series. For more information about the part number, please refer to P.16.

## Torque characteristics (at AC100 V of power voltage <Dotted line represents the torque at 10 % less supply voltage.>)

Without oil seal

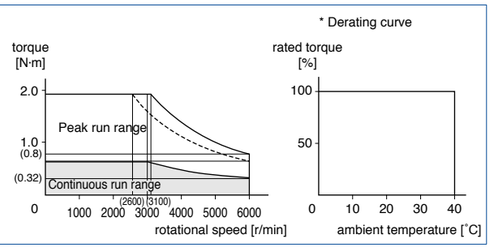


With oil seal

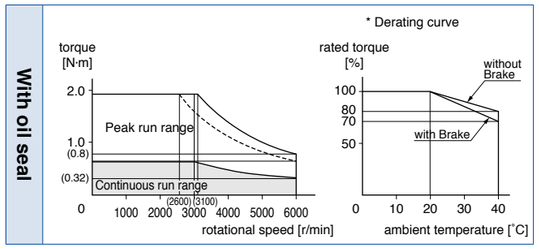


## Dimensions <In Case of Without Brake, Cable direction to output shaft.>

Mass: 0.78 kg

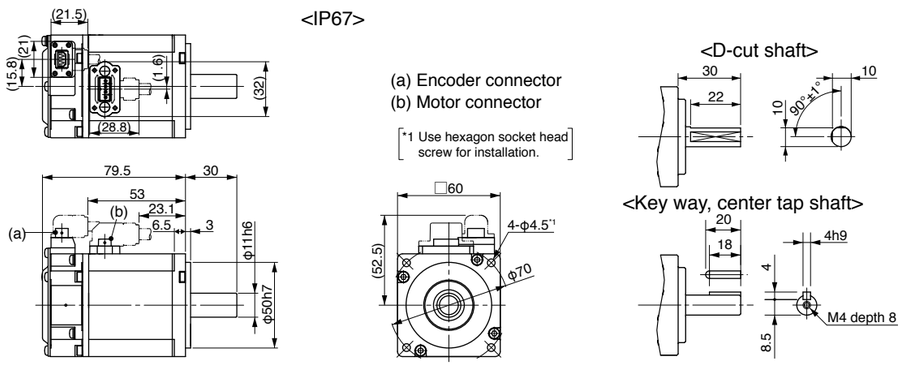


* For the dimensions with brake, refer to the right page.

[Unit: mm]

**<Cautions>** Reduce the moment of inertia ratio if high speed response operation is required.
Dimensions are subject to change without notice. Contact us or a dealer for the latest information.
Read the Instruction Manual carefully and understand all precautions and remarks before using the products.





# 200 V MSME 200 W [Low inertia, Small capacity]

## Specifications

| | | | AC200 V | |
|---|---|---|---|---|
| Motor model *1 | IP65 | | – | – |
| | IP67 | | MSME022G1□ | MSME022S1□ |
| Applicable driver *2 | Model No. | A5Ⅱ, A5 series | MAD◇T1507 | |
| | | A5ⅡE, A5E series | MAD◇T1507E | – |
| | Frame symbol | | A-frame | |
| Power supply capacity (kVA) | | | 0.5 | |
| Rated output (W) | | | 200 | |
| Rated torque (N·m) | | | 0.64 | |
| Momentary Max. peak torque (N·m) | | | 1.91 | |
| Rated current (A(rms)) | | | 1.5 | |
| Max. current (A(o-p)) | | | 6.5 | |
| Regenerative brake frequency (times/min) Note)1 | Without option | | No limit Note)2 | |
| | DV0P4283 | | No limit Note)2 | |
| Rated rotational speed (r/min) | | | 3000 | |
| Max. rotational speed (r/min) | | | 6000 | |
| Moment of inertia of rotor ($\times 10^{-4}$ kg·m$^2$) | Without brake | | 0.14 | |
| | With brake | | 0.16 | |
| Recommended moment of inertia ratio of the load and the rotor Note)3 | | | 30 times or less | |
| Rotary encoder specifications Note)5 | | | 20-bit Incremental | 17-bit Absolute |
| | Resolution per single turn | | 1048576 | 131072 |

• **Brake specifications** (For details, refer to P.183)
(This brake will be released when it is energized. Do not use this for braking the motor in motion.)

| | |
|---|---|
| Static friction torque (N·m) | 1.27 or more |
| Engaging time (ms) | 50 or less |
| Releasing time (ms) Note)4 | 15 or less |
| Exciting current (DC) (A) | 0.36 |
| Releasing voltage (DC) (V) | 1 or more |
| Exciting voltage (DC) (V) | 24±1.2 |

• **Permissible load** (For details, refer to P.183)

| | | |
|---|---|---|
| During assembly | Radial load P-direction (N) | 392 |
| | Thrust load A-direction (N) | 147 |
| | Thrust load B-direction (N) | 196 |
| During operation | Radial load P-direction (N) | 245 |
| | Thrust load A, B-direction (N) | 98 |

• For details of Note 1 to Note 5, refer to P.182, P.183.
• Dimensions of Driver, refer to P.42.
*1 Motor specifications: □
*2 The product that the end of driver model designation has "E" is "Position control type". Detail of model designation, refer to P.16.
*3 ◇ in number of applicable driver represents the series. For more information about the part number, please refer to P.16.

## Torque characteristics (at AC200 V of power voltage <Dotted line represents the torque at 10 % less supply voltage.>)

Without oil seal

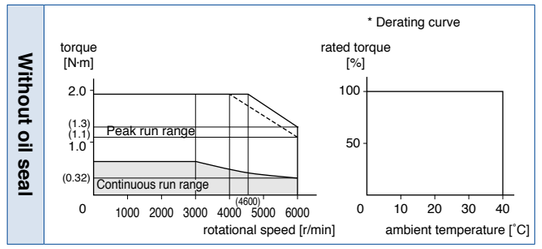


With oil seal

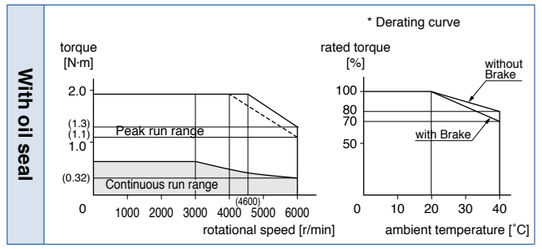


## Dimensions <In Case of With Brake, Cable direction to output shaft.>

Mass: 1.2 kg

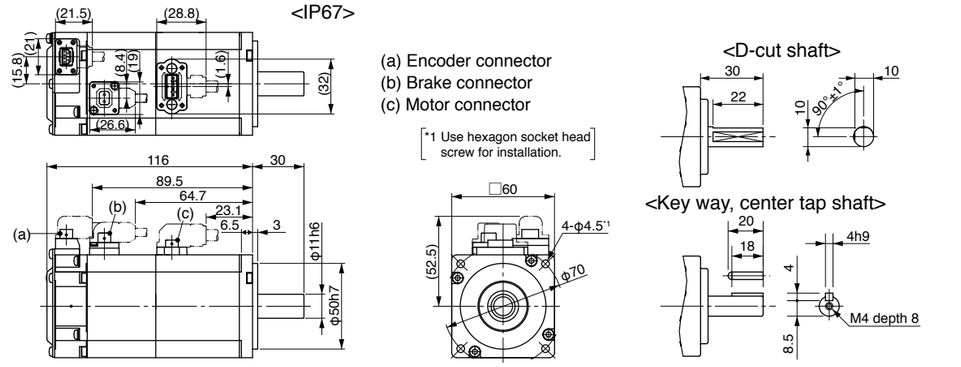


* For the dimensions without brake, refer to the left page.

[Unit: mm]

**<Cautions>** Reduce the moment of inertia ratio if high speed response operation is required.
Dimensions are subject to change without notice. Contact us or a dealer for the latest information.
Read the Instruction Manual carefully and understand all precautions and remarks before using the products.

# 100 V MSME 400 W [Low inertia, Small capacity]

## Specifications

| | | | AC100 V | |
|---|---|---|---|---|
| Motor model *1 | IP65 | | – | – |
| | IP67 | | MSME041G1□ | MSME041S1□ |
| Applicable driver *2 | Model No. | A5Ⅱ, A5 series | MCD◇T3120 | |
| | | A5ⅡE, A5E series | MCD◇T3120E | – |
| | Frame symbol | | C-frame | |
| Power supply capacity (kVA) | | | 0.9 | |
| Rated output (W) | | | 400 | |
| Rated torque (N·m) | | | 1.3 | |
| Momentary Max. peak torque (N·m) | | | 3.8 | |
| Rated current (A(rms)) | | | 4.6 | |
| Max. current (A(o-p)) | | | 19.5 | |
| Regenerative brake frequency (times/min) Note)1 | Without option | | No limit Note)2 | |
| | DV0P4282 | | No limit Note)2 | |
| Rated rotational speed (r/min) | | | 3000 | |
| Max. rotational speed (r/min) | | | 6000 | |
| Moment of inertia of rotor ($\times10^{-4}$ kg·m$^2$) | Without brake | | 0.26 | |
| | With brake | | 0.28 | |
| Recommended moment of inertia ratio of the load and the rotor Note)3 | | | 30 times or less | |
| Rotary encoder specifications Note)5 | | | 20-bit Incremental | 17-bit Absolute |
| | Resolution per single turn | | 1048576 | 131072 |

• **Brake specifications** (For details, refer to P.183)
(This brake will be released when it is energized.
Do not use this for braking the motor in motion.)

| | |
|---|---|
| Static friction torque (N·m) | 1.27 or more |
| Engaging time (ms) | 50 or less |
| Releasing time (ms) Note)4 | 15 or less |
| Exciting current (DC) (A) | 0.36 |
| Releasing voltage (DC) (V) | 1 or more |
| Exciting voltage (DC) (V) | 24±1.2 |

• **Permissible load** (For details, refer to P.183)

| | | |
|---|---|---|
| During assembly | Radial load P-direction (N) | 392 |
| | Thrust load A-direction (N) | 147 |
| | Thrust load B-direction (N) | 196 |
| During operation | Radial load P-direction (N) | 245 |
| | Thrust load A, B-direction (N) | 98 |

• For details of Note 1 to Note 5, refer to P.182, P.183.
• Dimensions of Driver, refer to P.43.
*1 Motor specifications: □
*2 The product that the end of driver model designation has "E" is "Position control type". Detail of model designation, refer to P.16.
*3 ◇ in number of applicable driver represents the series. For more information about the part number, please refer to P.16.

## Torque characteristics (at AC100 V of power voltage <Dotted line represents the torque at 10 % less supply voltage.>)

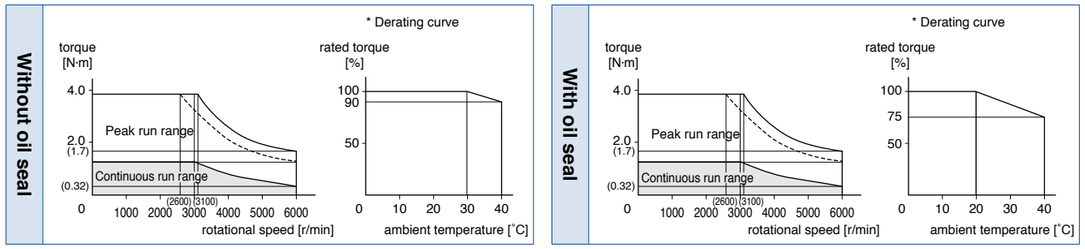


## Dimensions <In Case of Without Brake, Cable direction to output shaft.>

Mass: 1.2 kg

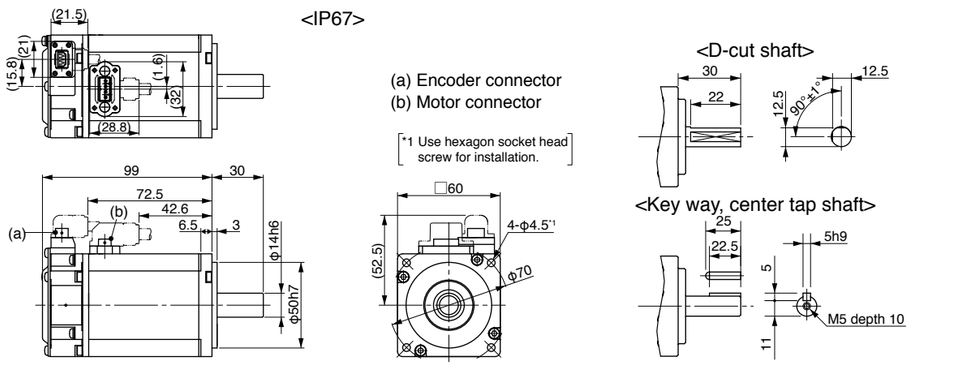


* For the dimensions with brake, refer to the right page.

[Unit: mm]

**<Cautions>** Reduce the moment of inertia ratio if high speed response operation is required.
Dimensions are subject to change without notice. Contact us or a dealer for the latest information.
Read the Instruction Manual carefully and understand all precautions and remarks before using the products.





# 200 V MSME 400 W [Low inertia, Small capacity]

## Specifications

| | | | AC200 V | |
|---|---|---|---|---|
| Motor model *1 | IP65 | | – | – |
| | IP67 | | MSME042G1□ | MSME042S1□ |
| Applicable driver *2 | Model No. | A5Ⅱ, A5 series | MBD◇T2510 | |
| | | A5ⅡE, A5E series | MBD◇T2510E | – |
| | Frame symbol | | B-frame | |
| Power supply capacity (kVA) | | | 0.9 | |
| Rated output (W) | | | 400 | |
| Rated torque (N·m) | | | 1.3 | |
| Momentary Max. peak torque (N·m) | | | 3.8 | |
| Rated current (A(rms)) | | | 2.4 | |
| Max. current (A(o-p)) | | | 10.2 | |
| Regenerative brake frequency (times/min) Note)1 | Without option | | No limit Note)2 | |
| | DV0P4283 | | No limit Note)2 | |
| Rated rotational speed (r/min) | | | 3000 | |
| Max. rotational speed (r/min) | | | 6000 | |
| Moment of inertia of rotor ($\times10^{-4}$ kg·m$^2$) | Without brake | | 0.26 | |
| | With brake | | 0.28 | |
| Recommended moment of inertia ratio of the load and the rotor Note)3 | | | 30 times or less | |
| Rotary encoder specifications Note)5 | | | 20-bit Incremental | 17-bit Absolute |
| | Resolution per single turn | | 1048576 | 131072 |

• **Brake specifications** (For details, refer to P.183)
(This brake will be released when it is energized.
Do not use this for braking the motor in motion.)

| | |
|---|---|
| Static friction torque (N·m) | 1.27 or more |
| Engaging time (ms) | 50 or less |
| Releasing time (ms) Note)4 | 15 or less |
| Exciting current (DC) (A) | 0.36 |
| Releasing voltage (DC) (V) | 1 or more |
| Exciting voltage (DC) (V) | 24±1.2 |

• **Permissible load** (For details, refer to P.183)

| | | |
|---|---|---|
| During assembly | Radial load P-direction (N) | 392 |
| | Thrust load A-direction (N) | 147 |
| | Thrust load B-direction (N) | 196 |
| During operation | Radial load P-direction (N) | 245 |
| | Thrust load A, B-direction (N) | 98 |

• For details of Note 1 to Note 5, refer to P.182, P.183.
• Dimensions of Driver, refer to P.42.
*1 Motor specifications: □
*2 The product that the end of driver model designation has "E" is "Position control type". Detail of model designation, refer to P.16.
*3 ◇ in number of applicable driver represents the series. For more information about the part number, please refer to P.16.

## Torque characteristics (at AC200 V of power voltage <Dotted line represents the torque at 10 % less supply voltage.>)

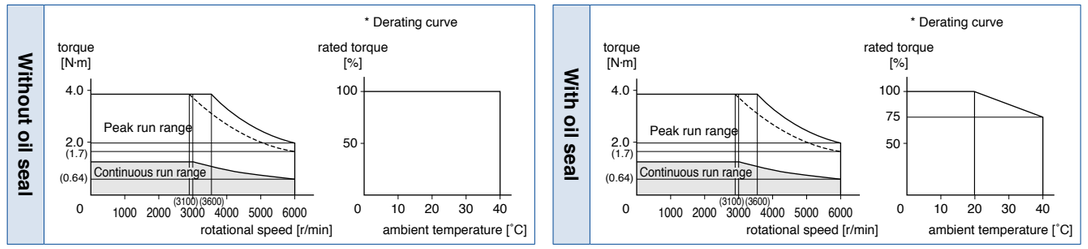


## Dimensions <In Case of With Brake, Cable direction to output shaft.>

Mass: 1.6 kg

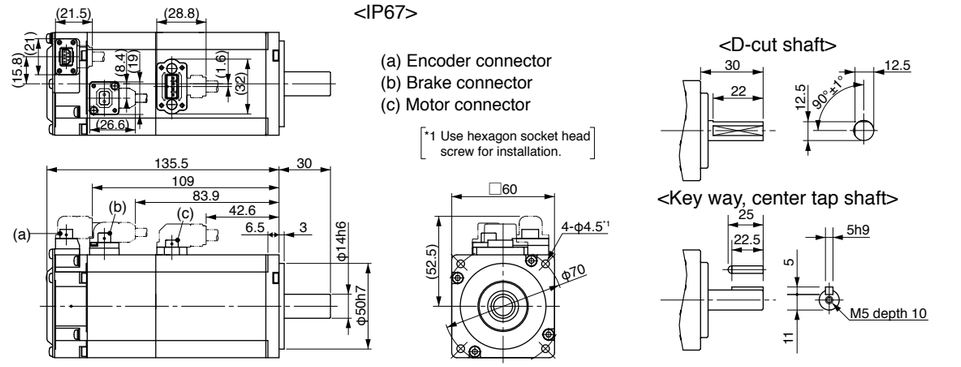


* For the dimensions without brake, refer to the left page.

[Unit: mm]

**<Cautions>** Reduce the moment of inertia ratio if high speed response operation is required.
Dimensions are subject to change without notice. Contact us or a dealer for the latest information.
Read the Instruction Manual carefully and understand all precautions and remarks before using the products.

# 200 V MSME 750 W [Low inertia, Small capacity]

## Specifications

| | | | AC200 V | |
|---|---|---|---|---|
| Motor model *1 | IP65 | | – | – |
| | IP67 | | MSME082G1□ | MSME082S1□ |
| Applicable driver *2 | Model No. | A5Ⅱ, A5 series | MCD◇T3520 | |
| | | A5ⅡE, A5E series | MCD◇T3520E | – |
| | Frame symbol | | C-frame | |
| Power supply capacity (kVA) | | | 1.3 | |
| Rated output (W) | | | 750 | |
| Rated torque (N·m) | | | 2.4 | |
| Momentary Max. peak torque (N·m) | | | 7.1 | |
| Rated current (A(rms)) | | | 4.1 | |
| Max. current (A(o-p)) | | | 17.4 | |
| Regenerative brake frequency (times/min) Note)1 | Without option | | No limit Note)2 | |
| | DV0P4283 | | No limit Note)2 | |
| Rated rotational speed (r/min) | | | 3000 | |
| Max. rotational speed (r/min) | | | 6000 | |
| Moment of inertia of rotor ($\times 10^{-4}$ kg·m$^2$) | Without brake | | 0.87 | |
| | With brake | | 0.97 | |
| Recommended moment of inertia ratio of the load and the rotor Note)3 | | | 20 times or less | |
| Rotary encoder specifications Note)5 | | | 20-bit Incremental | 17-bit Absolute |
| | Resolution per single turn | | 1048576 | 131072 |

• **Brake specifications** (For details, refer to P.183)
(This brake will be released when it is energized. Do not use this for braking the motor in motion.)

| | |
|---|---|
| Static friction torque (N·m) | 2.45 or more |
| Engaging time (ms) | 70 or less |
| Releasing time (ms) Note)4 | 20 or less |
| Exciting current (DC) (A) | 0.42 |
| Releasing voltage (DC) (V) | 1 or more |
| Exciting voltage (DC) (V) | 24±1.2 |

• **Permissible load** (For details, refer to P.183)

| | | |
|---|---|---|
| During assembly | Radial load P-direction (N) | 686 |
| | Thrust load A-direction (N) | 294 |
| | Thrust load B-direction (N) | 392 |
| During operation | Radial load P-direction (N) | 392 |
| | Thrust load A, B-direction (N) | 147 |

• For details of Note 1 to Note 5, refer to P.182, P.183.
• Dimensions of Driver, refer to P.43.
*1 Motor specifications: □
*2 The product that the end of driver model designation has "E" is "Position control type". Detail of model designation, refer to P.16.
*3 ◇ in number of applicable driver represents the series. For more information about the part number, please refer to P.16.

## Torque characteristics (at AC200 V of power voltage <Dotted line represents the torque at 10 % less supply voltage.>)

Without oil seal

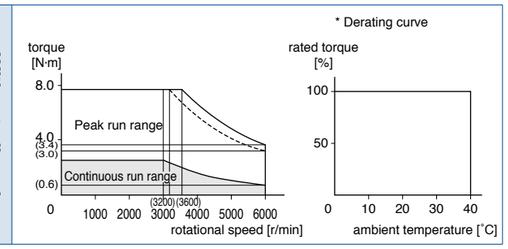


With oil seal

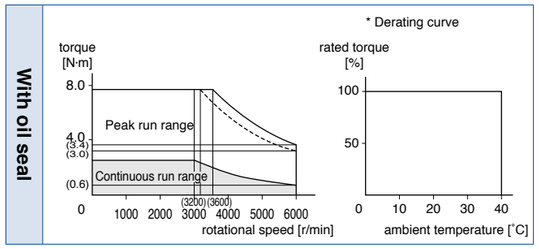


## Dimensions <In Case of With Brake, Cable direction to output shaft.>

Mass: Without brake/ 2.3 kg
With brake/ 3.1 kg

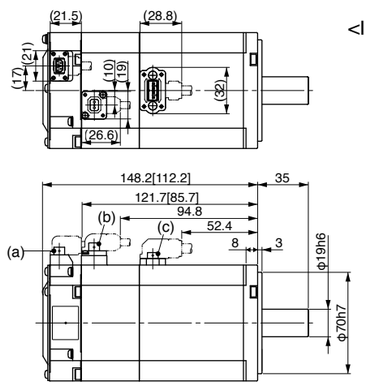


<IP67>

(a) Encoder connector
(b) Brake connector
(c) Motor connector

[*1 Use hexagon socket head screw for installation.]

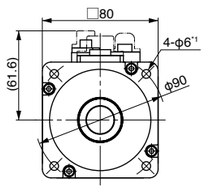


<D-cut shaft>

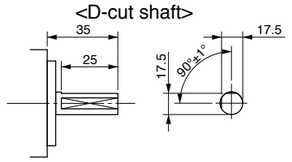


<Key way, center tap shaft>

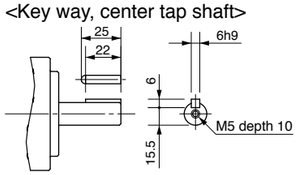


* Figures in [ ] represent the dimensions without brake.

[Unit: mm]

**<Cautions>** Reduce the moment of inertia ratio if high speed response operation is required.
Dimensions are subject to change without notice. Contact us or a dealer for the latest information.
Read the Instruction Manual carefully and understand all precautions and remarks before using the products.





# 200 V MSME 1.0 kW [Low inertia, Middle capacity]

## Specifications

| | | | AC200 V | |
|---|---|---|---|---|
| Motor model *1 | IP65 | | MSME102GC□ | MSME102SC□ |
| | IP67 | | MSME102G1□ | MSME102S1□ |
| Applicable driver *2 | Model No. | A5Ⅱ, A5 series | MDD◇T5540 | |
| | | A5ⅡE, A5E series | MDD◇T5540E | – |
| | Frame symbol | | D-frame | |
| Power supply capacity (kVA) | | | 1.8 | |
| Rated output (W) | | | 1000 | |
| Rated torque (N·m) | | | 3.18 | |
| Momentary Max. peak torque (N·m) | | | 9.55 | |
| Rated current (A(rms)) | | | 6.6 | |
| Max. current (A(o-p)) | | | 28 | |
| Regenerative brake frequency (times/min) Note)1 | Without option | | No limit Note)2 | |
| | DV0P4284 | | No limit Note)2 | |
| Rated rotational speed (r/min) | | | 3000 | |
| Max. rotational speed (r/min) | | | 5000 | |
| Moment of inertia of rotor ($\times 10^{-4}$ kg·m$^2$) | Without brake | | 2.03 | |
| | With brake | | 2.35 | |
| Recommended moment of inertia ratio of the load and the rotor Note)3 | | | 15 times or less | |
| Rotary encoder specifications Note)5 | | | 20-bit Incremental | 17-bit Absolute |
| | Resolution per single turn | | 1048576 | 131072 |

• **Brake specifications** (For details, refer to P.183)
(This brake will be released when it is energized. Do not use this for braking the motor in motion.)

| | |
|---|---|
| Static friction torque (N·m) | 7.8 or more |
| Engaging time (ms) | 50 or less |
| Releasing time (ms) Note)4 | 15 or less |
| Exciting current (DC) (A) | 0.81±10 % |
| Releasing voltage (DC) (V) | 2 or more |
| Exciting voltage (DC) (V) | 24±2.4 |

• **Permissible load** (For details, refer to P.183)

| | | |
|---|---|---|
| During assembly | Radial load P-direction (N) | 980 |
| | Thrust load A-direction (N) | 588 |
| | Thrust load B-direction (N) | 686 |
| During operation | Radial load P-direction (N) | 490 |
| | Thrust load A, B-direction (N) | 196 |

• For details of Note 1 to Note 5, refer to P.182, P.183.
• Dimensions of Driver, refer to P.43.
*1 Motor specifications: □
*2 The product that the end of driver model designation has "E" is "Position control type". Detail of model designation, refer to P.16.
*3 ◇ in number of applicable driver represents the series. For more information about the part number, please refer to P.16.

## Torque characteristics (at AC200 V of power voltage <Dotted line represents the torque at 10 % less supply voltage.>)

With oil seal

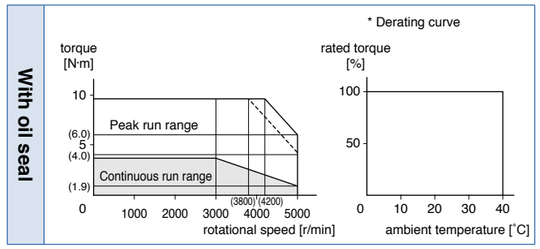


## Dimensions

(For IP67 motor, refer to P.137.)

Mass: Without brake/ 3.5 kg
With brake/ 4.5 kg

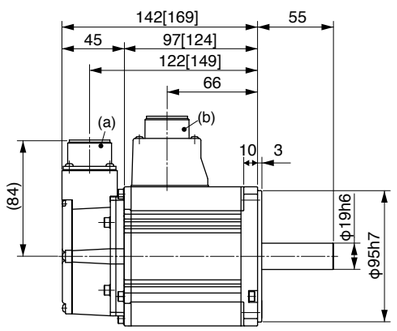


<IP65>

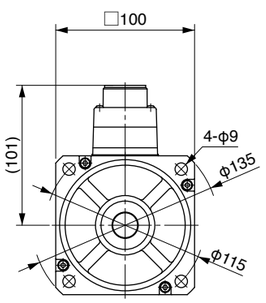


Key way dimensions

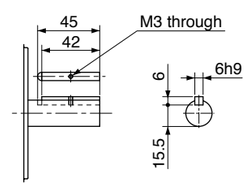


(a) Encoder connector
(b) Motor/Brake connector

* Figures in [ ] represent the dimensions with brake.

[Unit: mm]

**<Cautions>** Reduce the moment of inertia ratio if high speed response operation is required.
Dimensions are subject to change without notice. Contact us or a dealer for the latest information.
Read the Instruction Manual carefully and understand all precautions and remarks before using the products.

# 200 V MSME 1.5 kW [Low inertia, Middle capacity]

## Specifications

| | | | AC200 V | |
|---|---|---|---|---|
| Motor model *1 | IP65 | | MSME152GC□ | MSME152SC□ |
| | IP67 | | MSME152G1□ | MSME152S1□ |
| Applicable driver *2 | Model No. | A5Ⅱ, A5 series | MDD◇T5540 | |
| | | A5ⅡE, A5E series | MDD◇T5540E | – |
| | Frame symbol | | D-frame | |
| Power supply capacity (kVA) | | | 2.3 | |
| Rated output (W) | | | 1500 | |
| Rated torque (N·m) | | | 4.77 | |
| Momentary Max. peak torque (N·m) | | | 14.3 | |
| Rated current (A(rms)) | | | 8.2 | |
| Max. current (A(o-p)) | | | 35 | |
| Regenerative brake frequency (times/min) Note)1 | Without option | | No limit Note)2 | |
| | DV0P4284 | | No limit Note)2 | |
| Rated rotational speed (r/min) | | | 3000 | |
| Max. rotational speed (r/min) | | | 5000 | |
| Moment of inertia of rotor ($\times 10^{-4}$ kg·m$^2$) | Without brake | | 2.84 | |
| | With brake | | 3.17 | |
| Recommended moment of inertia ratio of the load and the rotor Note)3 | | | 15 times or less | |
| Rotary encoder specifications Note)5 | | | 20-bit Incremental | 17-bit Absolute |
| | Resolution per single turn | | 1048576 | 131072 |

• **Brake specifications** (For details, refer to P.183)
(This brake will be released when it is energized.
Do not use this for braking the motor in motion.)

| | |
|---|---|
| Static friction torque (N·m) | 7.8 or more |
| Engaging time (ms) | 50 or less |
| Releasing time (ms) Note)4 | 15 or less |
| Exciting current (DC) (A) | 0.81±10 % |
| Releasing voltage (DC) (V) | 2 or more |
| Exciting voltage (DC) (V) | 24±2.4 |

• **Permissible load** (For details, refer to P.183)

| | | |
|---|---|---|
| During assembly | Radial load P-direction (N) | 980 |
| | Thrust load A-direction (N) | 588 |
| | Thrust load B-direction (N) | 686 |
| During operation | Radial load P-direction (N) | 490 |
| | Thrust load A, B-direction (N) | 196 |

• For details of Note 1 to Note 5, refer to P.182, P.183.
• Dimensions of Driver, refer to P.43.
*1 Motor specifications: □
*2 The product that the end of driver model designation has "E" is "Position control type". Detail of model designation, refer to P.16.
*3 ◇ in number of applicable driver represents the series. For more information about the part number, please refer to P.16.

## Torque characteristics (at AC200 V of power voltage <Dotted line represents the torque at 10 % less supply voltage.>)

With oil seal

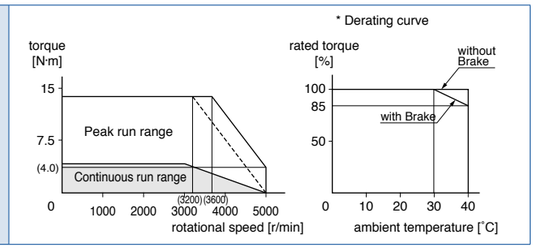


## Dimensions

(For IP67 motor, refer to P.137.)

Mass: Without brake/ 4.4 kg
With brake/ 5.4 kg

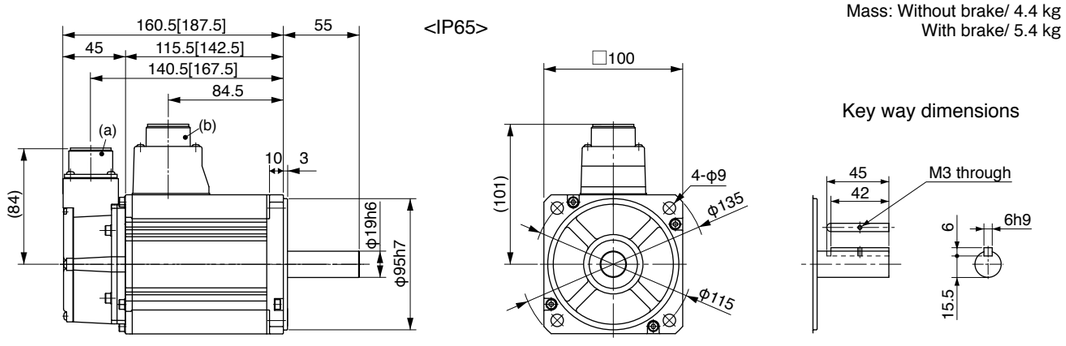


(a) Encoder connector
(b) Motor/Brake connector

* Figures in [ ] represent the dimensions with brake.

[Unit: mm]

**<Cautions>** Reduce the moment of inertia ratio if high speed response operation is required.
Dimensions are subject to change without notice. Contact us or a dealer for the latest information.
Read the Instruction Manual carefully and understand all precautions and remarks before using the products.





# 200 V MSME 2.0 kW [Low inertia, Middle capacity]

## Specifications

| | | | AC200 V | |
|---|---|---|---|---|
| Motor model *1 | IP65 | | MSME202GC□ | MSME202SC□ |
| | IP67 | | MSME202G1□ | MSME202S1□ |
| Applicable driver *2 | Model No. | A5Ⅱ, A5 series | MED◇T7364 | |
| | | A5ⅡE, A5E series | MED◇T7364E | – |
| | Frame symbol | | E-frame | |
| Power supply capacity (kVA) | | | 3.3 | |
| Rated output (W) | | | 2000 | |
| Rated torque (N·m) | | | 6.37 | |
| Momentary Max. peak torque (N·m) | | | 19.1 | |
| Rated current (A(rms)) | | | 11.3 | |
| Max. current (A(o-p)) | | | 48 | |
| Regenerative brake frequency (times/min) Note)1 | Without option | | No limit Note)2 | |
| | DV0P4285 | | No limit Note)2 | |
| Rated rotational speed (r/min) | | | 3000 | |
| Max. rotational speed (r/min) | | | 5000 | |
| Moment of inertia of rotor ($\times 10^{-4}$ kg·m$^2$) | Without brake | | 3.68 | |
| | With brake | | 4.01 | |
| Recommended moment of inertia ratio of the load and the rotor Note)3 | | | 15 times or less | |
| Rotary encoder specifications Note)5 | | | 20-bit Incremental | 17-bit Absolute |
| | Resolution per single turn | | 1048576 | 131072 |

• **Brake specifications** (For details, refer to P.183)
(This brake will be released when it is energized.
Do not use this for braking the motor in motion.)

| | |
|---|---|
| Static friction torque (N·m) | 7.8 or more |
| Engaging time (ms) | 50 or less |
| Releasing time (ms) Note)4 | 15 or less |
| Exciting current (DC) (A) | 0.81±10 % |
| Releasing voltage (DC) (V) | 2 or more |
| Exciting voltage (DC) (V) | 24±2.4 |

• **Permissible load** (For details, refer to P.183)

| | | |
|---|---|---|
| During assembly | Radial load P-direction (N) | 980 |
| | Thrust load A-direction (N) | 588 |
| | Thrust load B-direction (N) | 686 |
| During operation | Radial load P-direction (N) | 490 |
| | Thrust load A, B-direction (N) | 196 |

• For details of Note 1 to Note 5, refer to P.182, P.183.
• Dimensions of Driver, refer to P.44.
*1 Motor specifications: □
*2 The product that the end of driver model designation has "E" is "Position control type". Detail of model designation, refer to P.16.
*3 ◇ in number of applicable driver represents the series. For more information about the part number, please refer to P.16.

## Torque characteristics (at AC200 V of power voltage <Dotted line represents the torque at 10 % less supply voltage.>)

With oil seal

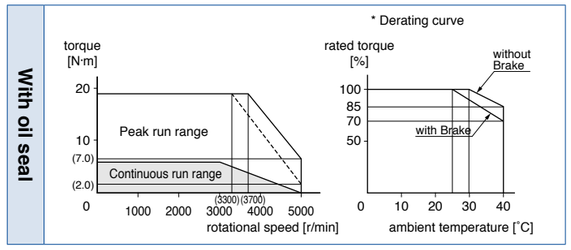


## Dimensions

(For IP67 motor, refer to P.137.)

Mass: Without brake/ 5.3 kg
With brake/ 6.3 kg

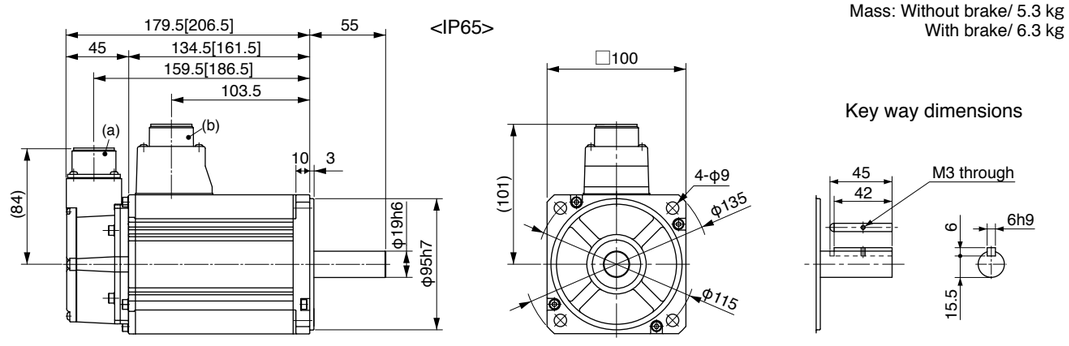


(a) Encoder connector
(b) Motor/Brake connector

* Figures in [ ] represent the dimensions with brake.

[Unit: mm]

**<Cautions>** Reduce the moment of inertia ratio if high speed response operation is required.
Dimensions are subject to change without notice. Contact us or a dealer for the latest information.
Read the Instruction Manual carefully and understand all precautions and remarks before using the products.

# 200 V MSME 3.0 kW [Low inertia, Middle capacity]

## Specifications

| | | | AC200 V | |
|---|---|---|---|---|
| Motor model *1 | IP65 | | MSME302GC□ | MSME302SC□ |
| | IP67 | | MSME302G1□ | MSME302S1□ |
| Applicable driver *2 | Model No. | A5Ⅱ, A5 series | MFD◇TA390 | |
| | | A5ⅡE, A5E series | MFD◇TA390E | – |
| | Frame symbol | | F-frame | |
| Power supply capacity (kVA) | | | 4.5 | |
| Rated output (W) | | | 3000 | |
| Rated torque (N·m) | | | 9.55 | |
| Momentary Max. peak torque (N·m) | | | 28.6 | |
| Rated current (A(rms)) | | | 18.1 | |
| Max. current (A(o-p)) | | | 77 | |
| Regenerative brake frequency (times/min) Note)1 | Without option | | No limit Note)2 | |
| | DV0P4285×2 | | No limit Note)2 | |
| Rated rotational speed (r/min) | | | 3000 | |
| Max. rotational speed (r/min) | | | 5000 | |
| Moment of inertia of rotor ($\times 10^{-4}$ kg·m$^2$) | Without brake | | 6.50 | |
| | With brake | | 6.85 | |
| Recommended moment of inertia ratio of the load and the rotor Note)3 | | | 15 times or less | |
| Rotary encoder specifications Note)5 | | | 20-bit Incremental | 17-bit Absolute |
| | Resolution per single turn | | 1048576 | 131072 |

• **Brake specifications** (For details, refer to P.183)
(This brake will be released when it is energized.
Do not use this for braking the motor in motion.)

| | |
|---|---|
| Static friction torque (N·m) | 11.8 or more |
| Engaging time (ms) | 80 or less |
| Releasing time (ms) Note)4 | 15 or less |
| Exciting current (DC) (A) | 0.81±10 % |
| Releasing voltage (DC) (V) | 2 or more |
| Exciting voltage (DC) (V) | 24±2.4 |

• **Permissible load** (For details, refer to P.183)

| | | |
|---|---|---|
| During assembly | Radial load P-direction (N) | 980 |
| | Thrust load A-direction (N) | 588 |
| | Thrust load B-direction (N) | 686 |
| During operation | Radial load P-direction (N) | 490 |
| | Thrust load A, B-direction (N) | 196 |

• For details of Note 1 to Note 5, refer to P.182, P.183.
• Dimensions of Driver, refer to P.45.
*1 Motor specifications: □
*2 The product that the end of driver model designation has "E" is "Position control type". Detail of model designation, refer to P.16.
*3 ◇ in number of applicable driver represents the series. For more information about the part number, please refer to P.16.

## Torque characteristics (at AC200 V of power voltage <Dotted line represents the torque at 10 % less supply voltage.>)

With oil seal

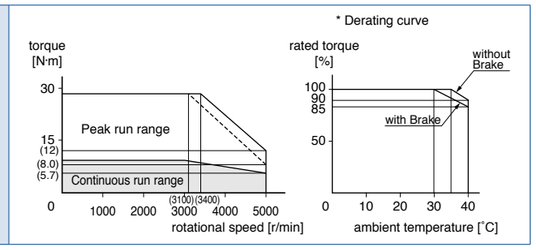


## Dimensions

(For IP67 motor, refer to P.137.)

Mass: Without brake/ 8.3 kg
With brake/ 9.4 kg

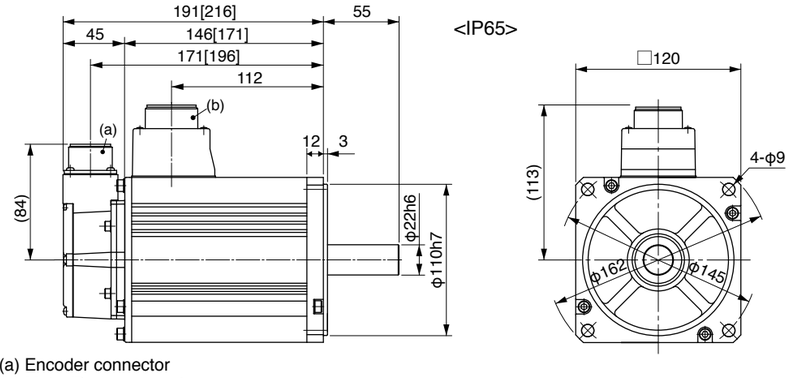


(a) Encoder connector
(b) Motor/Brake connector

* Figures in [ ] represent the dimensions with brake.

[Unit: mm]

**<Cautions>** Reduce the moment of inertia ratio if high speed response operation is required.
Dimensions are subject to change without notice. Contact us or a dealer for the latest information.
Read the Instruction Manual carefully and understand all precautions and remarks before using the products.





# 200 V MSME 4.0 kW [Low inertia, Middle capacity]

## Specifications

| | | | AC200 V | |
|---|---|---|---|---|
| Motor model *1 | IP65 | | MSME402GC□ | MSME402SC□ |
| | IP67 | | MSME402G1□ | MSME402S1□ |
| Applicable driver *2 | Model No. | A5Ⅱ, A5 series | MFD◇TB3A2 | |
| | | A5ⅡE, A5E series | MFD◇TB3A2E | – |
| | Frame symbol | | F-frame | |
| Power supply capacity (kVA) | | | 6.0 | |
| Rated output (W) | | | 4000 | |
| Rated torque (N·m) | | | 12.7 | |
| Momentary Max. peak torque (N·m) | | | 38.2 | |
| Rated current (A(rms)) | | | 19.6 | |
| Max. current (A(o-p)) | | | 83 | |
| Regenerative brake frequency (times/min) Note)1 | Without option | | No limit Note)2 | |
| | DV0P4285×2 | | No limit Note)2 | |
| Rated rotational speed (r/min) | | | 3000 | |
| Max. rotational speed (r/min) | | | 4500 | |
| Moment of inertia of rotor ($\times 10^{-4}$ kg·m$^2$) | Without brake | | 12.9 | |
| | With brake | | 14.2 | |
| Recommended moment of inertia ratio of the load and the rotor Note)3 | | | 15 times or less | |
| Rotary encoder specifications Note)5 | | | 20-bit Incremental | 17-bit Absolute |
| | Resolution per single turn | | 1048576 | 131072 |

• **Brake specifications** (For details, refer to P.183)
(This brake will be released when it is energized.
Do not use this for braking the motor in motion.)

| | |
|---|---|
| Static friction torque (N·m) | 16.2 or more |
| Engaging time (ms) | 110 or less |
| Releasing time (ms) Note)4 | 50 or less |
| Exciting current (DC) (A) | 0.90±10 % |
| Releasing voltage (DC) (V) | 2 or more |
| Exciting voltage (DC) (V) | 24±2.4 |

• **Permissible load** (For details, refer to P.183)

| | | |
|---|---|---|
| During assembly | Radial load P-direction (N) | 980 |
| | Thrust load A-direction (N) | 588 |
| | Thrust load B-direction (N) | 686 |
| During operation | Radial load P-direction (N) | 784 |
| | Thrust load A, B-direction (N) | 343 |

• For details of Note 1 to Note 5, refer to P.182, P.183.
• Dimensions of Driver, refer to P.45.
*1 Motor specifications: □
*2 The product that the end of driver model designation has "E" is "Position control type". Detail of model designation, refer to P.16.
*3 ◇ in number of applicable driver represents the series. For more information about the part number, please refer to P.16.

## Torque characteristics (at AC200 V of power voltage <Dotted line represents the torque at 10 % less supply voltage.>)

With oil seal

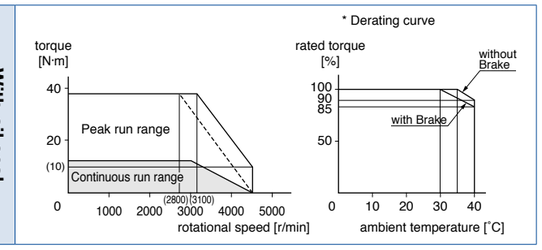


## Dimensions

(For IP67 motor, refer to P.137.)

Mass: Without brake/ 11.0 kg
With brake/ 12.6 kg

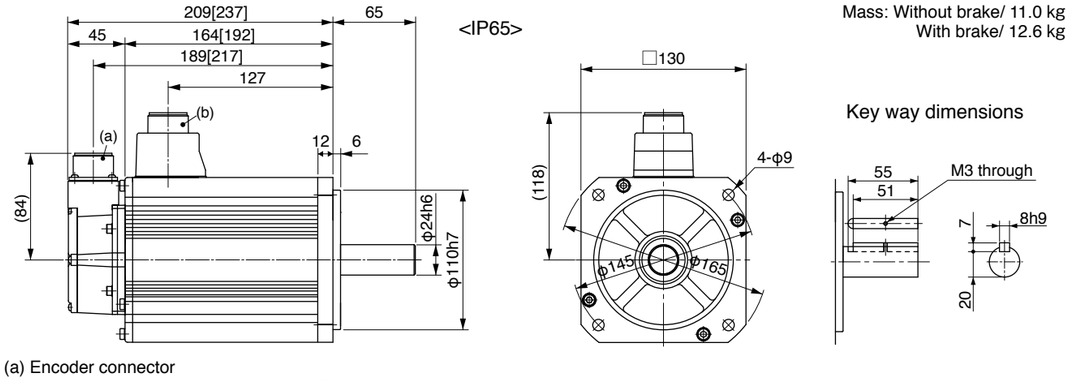


(a) Encoder connector
(b) Motor/Brake connector

* Figures in [ ] represent the dimensions with brake.

[Unit: mm]

**<Cautions>** Reduce the moment of inertia ratio if high speed response operation is required.
Dimensions are subject to change without notice. Contact us or a dealer for the latest information.
Read the Instruction Manual carefully and understand all precautions and remarks before using the products.

# 200 V MSME 5.0 kW [Low inertia, Middle capacity]

## Specifications

| | | | AC200 V | |
|---|---|---|---|---|
| Motor model *1 | IP65 | | MSME502GC□ | MSME502SC□ |
| | IP67 | | MSME502G1□ | MSME502S1□ |
| Applicable driver *2 | Model No. | A5Ⅱ, A5 series | MFD◇TB3A2 | |
| | | A5ⅡE, A5E series | MFD◇TB3A2E | – |
| | Frame symbol | | F-frame | |
| Power supply capacity (kVA) | | | 7.5 | |
| Rated output (W) | | | 5000 | |
| Rated torque (N·m) | | | 15.9 | |
| Momentary Max. peak torque (N·m) | | | 47.7 | |
| Rated current (A(rms)) | | | 24.0 | |
| Max. current (A(o-p)) | | | 102 | |
| Regenerative brake frequency (times/min) Note)1 | Without option | | 357 | |
| | DV0P4285×2 | | No limit Note)2 | |
| Rated rotational speed (r/min) | | | 3000 | |
| Max. rotational speed (r/min) | | | 4500 | |
| Moment of inertia of rotor ($\times10^{-4}$ kg·m$^2$) | Without brake | | 17.4 | |
| | With brake | | 18.6 | |
| Recommended moment of inertia ratio of the load and the rotor Note)3 | | | 15 times or less | |
| Rotary encoder specifications Note)5 | | | 20-bit Incremental | 17-bit Absolute |
| | Resolution per single turn | | 1048576 | 131072 |

• **Brake specifications** (For details, refer to P.183)
(This brake will be released when it is energized.
Do not use this for braking the motor in motion.)

| | |
|---|---|
| Static friction torque (N·m) | 16.2 or more |
| Engaging time (ms) | 110 or less |
| Releasing time (ms) Note)4 | 50 or less |
| Exciting current (DC) (A) | 0.90±10 % |
| Releasing voltage (DC) (V) | 2 or more |
| Exciting voltage (DC) (V) | 24±2.4 |

• **Permissible load** (For details, refer to P.183)

| | | |
|---|---|---|
| During assembly | Radial load P-direction (N) | 980 |
| | Thrust load A-direction (N) | 588 |
| | Thrust load B-direction (N) | 686 |
| During operation | Radial load P-direction (N) | 784 |
| | Thrust load A, B-direction (N) | 343 |

• For details of Note 1 to Note 5, refer to P.182, P.183.
• Dimensions of Driver, refer to P.45.
*1 Motor specifications: □
*2 The product that the end of driver model designation has "E" is "Position control type". Detail of model designation, refer to P.16.
*3 ◇ in number of applicable driver represents the series. For more information about the part number, please refer to P.16.

## Torque characteristics (at AC200 V of power voltage <Dotted line represents the torque at 10 % less supply voltage.>)

With oil seal

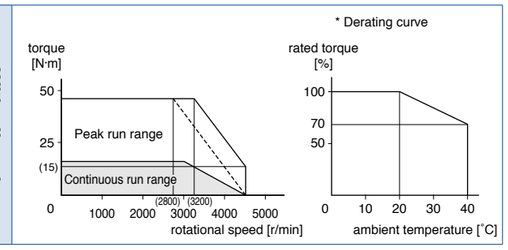


## Dimensions

(For IP67 motor, refer to P.138.)

Mass: Without brake/ 14.0 kg
With brake/ 16.0 kg

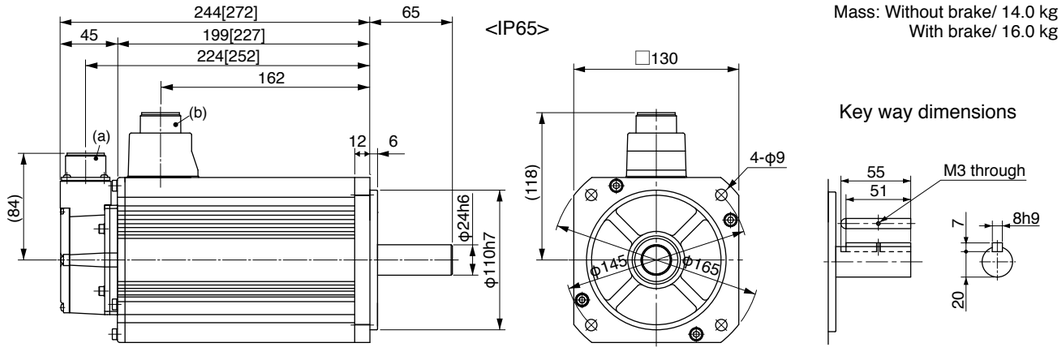


(a) Encoder connector
(b) Motor/Brake connector

* Figures in [ ] represent the dimensions with brake.

[Unit: mm]

**<Cautions>** Reduce the moment of inertia ratio if high speed response operation is required.
Dimensions are subject to change without notice. Contact us or a dealer for the latest information.
Read the Instruction Manual carefully and understand all precautions and remarks before using the products.





# 200 V MDME 1.0 kW [Middle inertia, Middle capacity]

## Specifications

| | | | AC200 V | |
|---|---|---|---|---|
| Motor model *1 | IP65 | | MDME102GC□ | MDME102SC□ |
| | IP67 | | MDME102G1□ | MDME102S1□ |
| Applicable driver *2 | Model No. | A5Ⅱ, A5 series | MDD◇T3530 | |
| | | A5ⅡE, A5E series | MDD◇T3530E | – |
| | Frame symbol | | D-frame | |
| Power supply capacity (kVA) | | | 1.8 | |
| Rated output (W) | | | 1000 | |
| Rated torque (N·m) | | | 4.77 | |
| Momentary Max. peak torque (N·m) | | | 14.3 | |
| Rated current (A(rms)) | | | 5.7 | |
| Max. current (A(o-p)) | | | 24 | |
| Regenerative brake frequency (times/min) Note)1 | Without option | | No limit Note)2 | |
| | DV0P4284 | | No limit Note)2 | |
| Rated rotational speed (r/min) | | | 2000 | |
| Max. rotational speed (r/min) | | | 3000 | |
| Moment of inertia of rotor ($\times10^{-4}$ kg·m$^2$) | Without brake | | 4.60 | |
| | With brake | | 5.90 | |
| Recommended moment of inertia ratio of the load and the rotor Note)3 | | | 10 times or less | |
| Rotary encoder specifications Note)5 | | | 20-bit Incremental | 17-bit Absolute |
| | Resolution per single turn | | 1048576 | 131072 |

• **Brake specifications** (For details, refer to P.183)
(This brake will be released when it is energized.
Do not use this for braking the motor in motion.)

| | |
|---|---|
| Static friction torque (N·m) | 4.9 or more |
| Engaging time (ms) | 80 or less |
| Releasing time (ms) Note)4 | 70 or less |
| Exciting current (DC) (A) | 0.59±10 % |
| Releasing voltage (DC) (V) | 2 or more |
| Exciting voltage (DC) (V) | 24±2.4 |

• **Permissible load** (For details, refer to P.183)

| | | |
|---|---|---|
| During assembly | Radial load P-direction (N) | 980 |
| | Thrust load A-direction (N) | 588 |
| | Thrust load B-direction (N) | 686 |
| During operation | Radial load P-direction (N) | 490 |
| | Thrust load A, B-direction (N) | 196 |

• For details of Note 1 to Note 5, refer to P.182, P.183.
• Dimensions of Driver, refer to P.43.
*1 Motor specifications: □
*2 The product that the end of driver model designation has "E" is "Position control type". Detail of model designation, refer to P.16.
*3 ◇ in number of applicable driver represents the series. For more information about the part number, please refer to P.16.

## Torque characteristics (at AC200 V of power voltage <Dotted line represents the torque at 10 % less supply voltage.>)

With oil seal

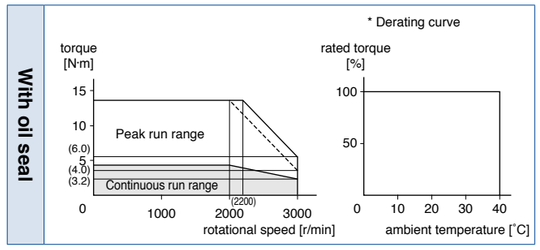


## Dimensions

(For IP67 motor, refer to P.138.)

Mass: Without brake/ 5.2 kg
With brake/ 6.7 kg

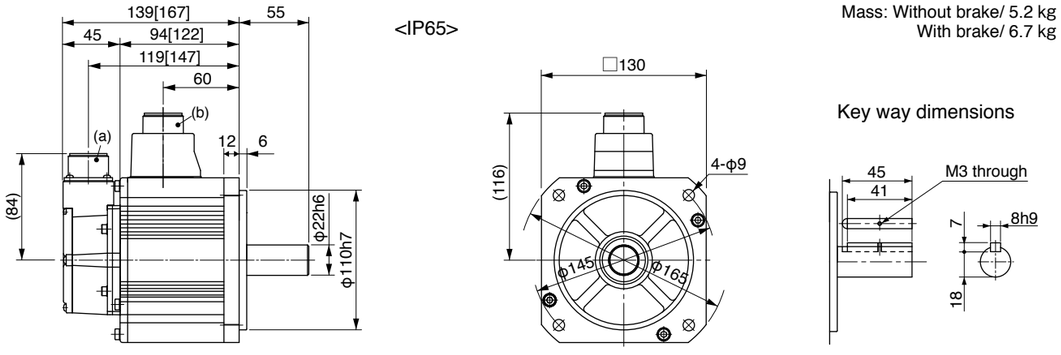


(a) Encoder connector
(b) Motor/Brake connector

* Figures in [ ] represent the dimensions with brake.

[Unit: mm]

**<Cautions>** Reduce the moment of inertia ratio if high speed response operation is required.
Dimensions are subject to change without notice. Contact us or a dealer for the latest information.
Read the Instruction Manual carefully and understand all precautions and remarks before using the products.

# 200 V MDME 1.5 kW [Middle inertia, Middle capacity]

## Specifications

| | | | AC200 V | |
|---|---|---|---|---|
| Motor model *1 | IP65 | | MDME152GC□ | MDME152SC□ |
| | IP67 | | MDME152G1□ | MDME152S1□ |
| Applicable driver *2 | Model No. | A5Ⅱ, A5 series | MDD◇T5540 | |
| | | A5ⅡE, A5E series | MDD◇T5540E | – |
| | Frame symbol | | D-frame | |
| Power supply capacity (kVA) | | | 2.3 | |
| Rated output (W) | | | 1500 | |
| Rated torque (N·m) | | | 7.16 | |
| Momentary Max. peak torque (N·m) | | | 21.5 | |
| Rated current (A(rms)) | | | 9.4 | |
| Max. current (A(o-p)) | | | 40 | |
| Regenerative brake frequency (times/min) Note)1 | Without option | | No limit Note)2 | |
| | DV0P4284 | | No limit Note)2 | |
| Rated rotational speed (r/min) | | | 2000 | |
| Max. rotational speed (r/min) | | | 3000 | |
| Moment of inertia of rotor ($\times 10^{-4}$ kg·m$^2$) | Without brake | | 6.70 | |
| | With brake | | 7.99 | |
| Recommended moment of inertia ratio of the load and the rotor Note)3 | | | 10 times or less | |
| Rotary encoder specifications Note)5 | | | 20-bit Incremental | 17-bit Absolute |
| | Resolution per single turn | | 1048576 | 131072 |

• **Brake specifications** (For details, refer to P.183)
(This brake will be released when it is energized.
Do not use this for braking the motor in motion.)

| | |
|---|---|
| Static friction torque (N·m) | 13.7 or more |
| Engaging time (ms) | 100 or less |
| Releasing time (ms) Note)4 | 50 or less |
| Exciting current (DC) (A) | 0.79±10 % |
| Releasing voltage (DC) (V) | 2 or more |
| Exciting voltage (DC) (V) | 24±2.4 |

• **Permissible load** (For details, refer to P.183)

| | | |
|---|---|---|
| During assembly | Radial load P-direction (N) | 980 |
| | Thrust load A-direction (N) | 588 |
| | Thrust load B-direction (N) | 686 |
| During operation | Radial load P-direction (N) | 490 |
| | Thrust load A, B-direction (N) | 196 |

• For details of Note 1 to Note 5, refer to P.182, P.183.
• Dimensions of Driver, refer to P.43.
*1 Motor specifications: □
*2 The product that the end of driver model designation has "E" is "Position control type". Detail of model designation, refer to P.16.
*3 ◇ in number of applicable driver represents the series. For more information about the part number, please refer to P.16.

## Torque characteristics (at AC200 V of power voltage <Dotted line represents the torque at 10 % less supply voltage.>)

With oil seal

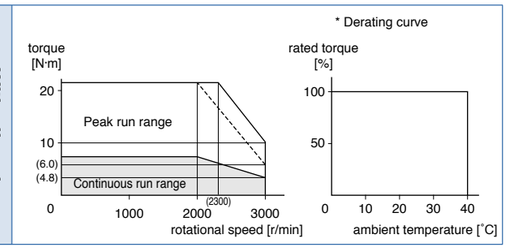


## Dimensions

(For IP67 motor, refer to P.138.)

Mass: Without brake/ 6.7 kg
With brake/ 8.2 kg

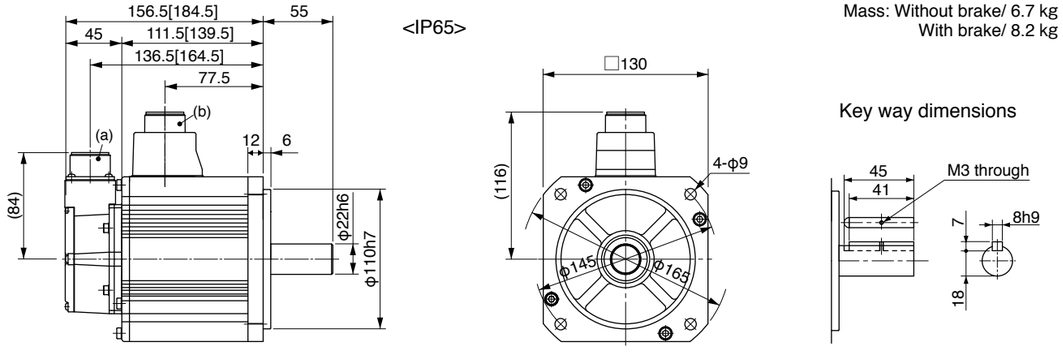


(a) Encoder connector
(b) Motor/Brake connector

* Figures in [ ] represent the dimensions with brake.

[Unit: mm]

**<Cautions>** Reduce the moment of inertia ratio if high speed response operation is required.
Dimensions are subject to change without notice. Contact us or a dealer for the latest information.
Read the Instruction Manual carefully and understand all precautions and remarks before using the products.





# 200 V MDME 2.0 kW [Middle inertia, Middle capacity]

## Specifications

| | | | AC200 V | |
|---|---|---|---|---|
| Motor model *1 | IP65 | | MDME202GC□ | MDME202SC□ |
| | IP67 | | MDME202G1□ | MDME202S1□ |
| Applicable driver *2 | Model No. | A5Ⅱ, A5 series | MED◇T7364 | |
| | | A5ⅡE, A5E series | MED◇T7364E | – |
| | Frame symbol | | E-frame | |
| Power supply capacity (kVA) | | | 3.3 | |
| Rated output (W) | | | 2000 | |
| Rated torque (N·m) | | | 9.55 | |
| Momentary Max. peak torque (N·m) | | | 28.6 | |
| Rated current (A(rms)) | | | 11.5 | |
| Max. current (A(o-p)) | | | 49 | |
| Regenerative brake frequency (times/min) Note)1 | Without option | | No limit Note)2 | |
| | DV0P4285 | | No limit Note)2 | |
| Rated rotational speed (r/min) | | | 2000 | |
| Max. rotational speed (r/min) | | | 3000 | |
| Moment of inertia of rotor ($\times 10^{-4}$ kg·m$^2$) | Without brake | | 8.72 | |
| | With brake | | 10.0 | |
| Recommended moment of inertia ratio of the load and the rotor Note)3 | | | 10 times or less | |
| Rotary encoder specifications Note)5 | | | 20-bit Incremental | 17-bit Absolute |
| | Resolution per single turn | | 1048576 | 131072 |

• **Brake specifications** (For details, refer to P.183)
(This brake will be released when it is energized.
Do not use this for braking the motor in motion.)

| | |
|---|---|
| Static friction torque (N·m) | 13.7 or more |
| Engaging time (ms) | 100 or less |
| Releasing time (ms) Note)4 | 50 or less |
| Exciting current (DC) (A) | 0.79±10 % |
| Releasing voltage (DC) (V) | 2 or more |
| Exciting voltage (DC) (V) | 24±2.4 |

• **Permissible load** (For details, refer to P.183)

| | | |
|---|---|---|
| During assembly | Radial load P-direction (N) | 980 |
| | Thrust load A-direction (N) | 588 |
| | Thrust load B-direction (N) | 686 |
| During operation | Radial load P-direction (N) | 490 |
| | Thrust load A, B-direction (N) | 196 |

• For details of Note 1 to Note 5, refer to P.182, P.183.
• Dimensions of Driver, refer to P.44.
*1 Motor specifications: □
*2 The product that the end of driver model designation has "E" is "Position control type". Detail of model designation, refer to P.16.
*3 ◇ in number of applicable driver represents the series. For more information about the part number, please refer to P.16.

## Torque characteristics (at AC200 V of power voltage <Dotted line represents the torque at 10 % less supply voltage.>)

With oil seal

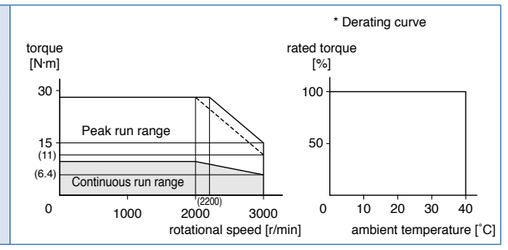


## Dimensions

(For IP67 motor, refer to P.138.)

Mass: Without brake/ 8.0 kg
With brake/ 9.5 kg

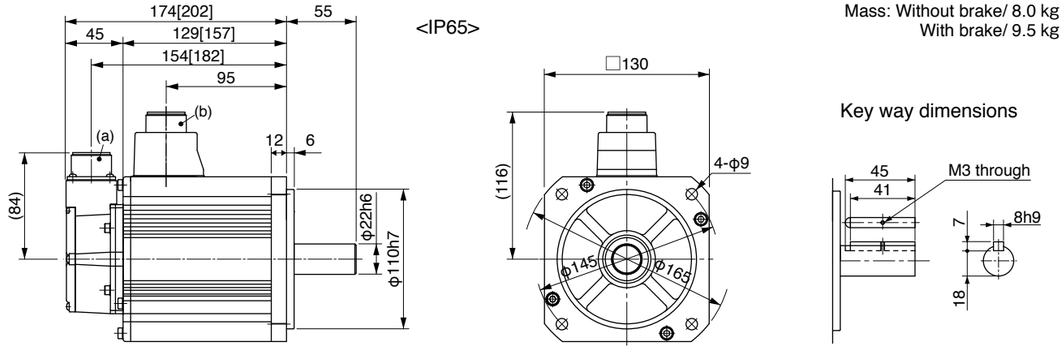


(a) Encoder connector
(b) Motor/Brake connector

* Figures in [ ] represent the dimensions with brake.

[Unit: mm]

**<Cautions>** Reduce the moment of inertia ratio if high speed response operation is required.
Dimensions are subject to change without notice. Contact us or a dealer for the latest information.
Read the Instruction Manual carefully and understand all precautions and remarks before using the products.

# 200 V MDME 3.0 kW [Middle inertia, Middle capacity]

## Specifications

| | | | AC200 V | |
|---|---|---|---|---|
| Motor model *1 | IP65 | | MDME302GC□ | MDME302SC□ |
| | IP67 | | MDME302G1□ | MDME302S1□ |
| Applicable driver *2 | Model No. | A5Ⅱ, A5 series | MFD◇TA390 | |
| | | A5ⅡE, A5E series | MFD◇TA390E | – |
| | Frame symbol | | F-frame | |
| Power supply capacity (kVA) | | | 4.5 | |
| Rated output (W) | | | 3000 | |
| Rated torque (N·m) | | | 14.3 | |
| Momentary Max. peak torque (N·m) | | | 43.0 | |
| Rated current (A(rms)) | | | 17.4 | |
| Max. current (A(o-p)) | | | 74 | |
| Regenerative brake frequency (times/min) Note)1 | Without option | | No limit Note)2 | |
| | DV0P4285×2 | | No limit Note)2 | |
| Rated rotational speed (r/min) | | | 2000 | |
| Max. rotational speed (r/min) | | | 3000 | |
| Moment of inertia of rotor ($\times10^{-4}$ kg·m$^2$) | Without brake | | 12.9 | |
| | With brake | | 14.2 | |
| Recommended moment of inertia ratio of the load and the rotor Note)3 | | | 10 times or less | |
| Rotary encoder specifications Note)5 | | | 20-bit Incremental | 17-bit Absolute |
| | Resolution per single turn | | 1048576 | 131072 |

• **Brake specifications** (For details, refer to P.183)
(This brake will be released when it is energized.
Do not use this for braking the motor in motion.)

| | |
|---|---|
| Static friction torque (N·m) | 16.2 or more |
| Engaging time (ms) | 110 or less |
| Releasing time (ms) Note)4 | 50 or less |
| Exciting current (DC) (A) | 0.90±10 % |
| Releasing voltage (DC) (V) | 2 or more |
| Exciting voltage (DC) (V) | 24±2.4 |

• **Permissible load** (For details, refer to P.183)

| | | |
|---|---|---|
| During assembly | Radial load P-direction (N) | 980 |
| | Thrust load A-direction (N) | 588 |
| | Thrust load B-direction (N) | 686 |
| During operation | Radial load P-direction (N) | 784 |
| | Thrust load A, B-direction (N) | 343 |

• For details of Note 1 to Note 5, refer to P.182, P.183.
• Dimensions of Driver, refer to P.45.
*1 Motor specifications: □
*2 The product that the end of driver model designation has "E" is "Position control type". Detail of model designation, refer to P.16.
*3 ◇ in number of applicable driver represents the series. For more information about the part number, please refer to P.16.

## Torque characteristics (at AC200 V of power voltage <Dotted line represents the torque at 10 % less supply voltage.>)

With oil seal

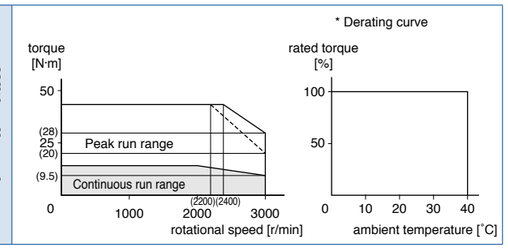


## Dimensions

(For IP67 motor, refer to P.139.)

Mass: Without brake/ 11.0 kg
With brake/ 12.6 kg

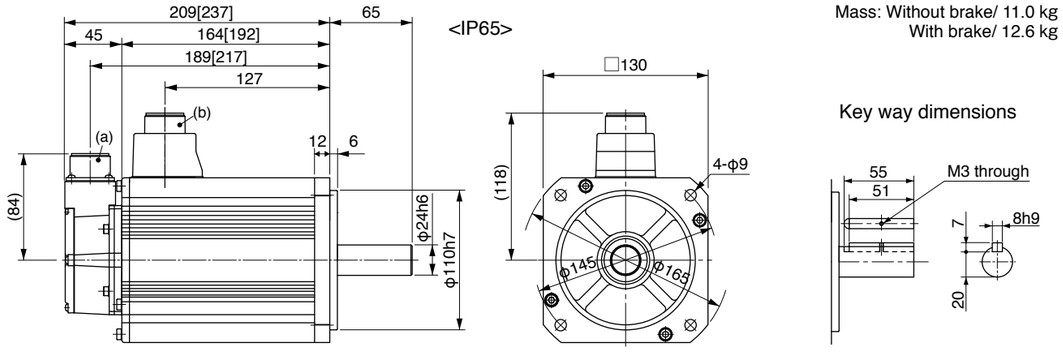


(a) Encoder connector
(b) Motor/Brake connector

* Figures in [ ] represent the dimensions with brake.

[Unit: mm]

**<Cautions>** Reduce the moment of inertia ratio if high speed response operation is required.
Dimensions are subject to change without notice. Contact us or a dealer for the latest information.
Read the Instruction Manual carefully and understand all precautions and remarks before using the products.





# 200 V MDME 4.0 kW [Middle inertia, Middle capacity]

## Specifications

| | | | AC200 V | |
|---|---|---|---|---|
| Motor model *1 | IP65 | | MDME402GC□ | MDME402SC□ |
| | IP67 | | MDME402G1□ | MDME402S1□ |
| Applicable driver *2 | Model No. | A5Ⅱ, A5 series | MFD◇TB3A2 | |
| | | A5ⅡE, A5E series | MFD◇TB3A2E | – |
| | Frame symbol | | F-frame | |
| Power supply capacity (kVA) | | | 6.0 | |
| Rated output (W) | | | 4000 | |
| Rated torque (N·m) | | | 19.1 | |
| Momentary Max. peak torque (N·m) | | | 57.3 | |
| Rated current (A(rms)) | | | 21.0 | |
| Max. current (A(o-p)) | | | 89 | |
| Regenerative brake frequency (times/min) Note)1 | Without option | | No limit Note)2 | |
| | DV0P4285×2 | | No limit Note)2 | |
| Rated rotational speed (r/min) | | | 2000 | |
| Max. rotational speed (r/min) | | | 3000 | |
| Moment of inertia of rotor ($\times10^{-4}$ kg·m$^2$) | Without brake | | 37.6 | |
| | With brake | | 42.9 | |
| Recommended moment of inertia ratio of the load and the rotor Note)3 | | | 10 times or less | |
| Rotary encoder specifications Note)5 | | | 20-bit Incremental | 17-bit Absolute |
| | Resolution per single turn | | 1048576 | 131072 |

• **Brake specifications** (For details, refer to P.183)
(This brake will be released when it is energized.
Do not use this for braking the motor in motion.)

| | |
|---|---|
| Static friction torque (N·m) | 24.5 or more |
| Engaging time (ms) | 80 or less |
| Releasing time (ms) Note)4 | 25 or less |
| Exciting current (DC) (A) | 1.3±10 % |
| Releasing voltage (DC) (V) | 2 or more |
| Exciting voltage (DC) (V) | 24±2.4 |

• **Permissible load** (For details, refer to P.183)

| | | |
|---|---|---|
| During assembly | Radial load P-direction (N) | 1666 |
| | Thrust load A-direction (N) | 784 |
| | Thrust load B-direction (N) | 980 |
| During operation | Radial load P-direction (N) | 784 |
| | Thrust load A, B-direction (N) | 343 |

• For details of Note 1 to Note 5, refer to P.182, P.183.
• Dimensions of Driver, refer to P.45.
*1 Motor specifications: □
*2 The product that the end of driver model designation has "E" is "Position control type". Detail of model designation, refer to P.16.
*3 ◇ in number of applicable driver represents the series. For more information about the part number, please refer to P.16.

## Torque characteristics (at AC200 V of power voltage <Dotted line represents the torque at 10 % less supply voltage.>)

With oil seal

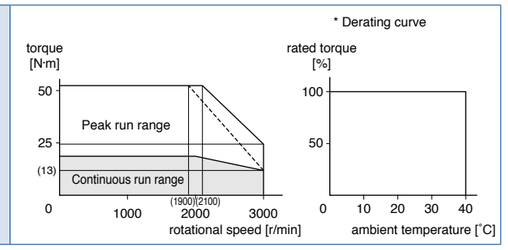


## Dimensions

(For IP67 motor, refer to P.139.)

Mass: Without brake/ 15.5 kg
With brake/ 18.7 kg

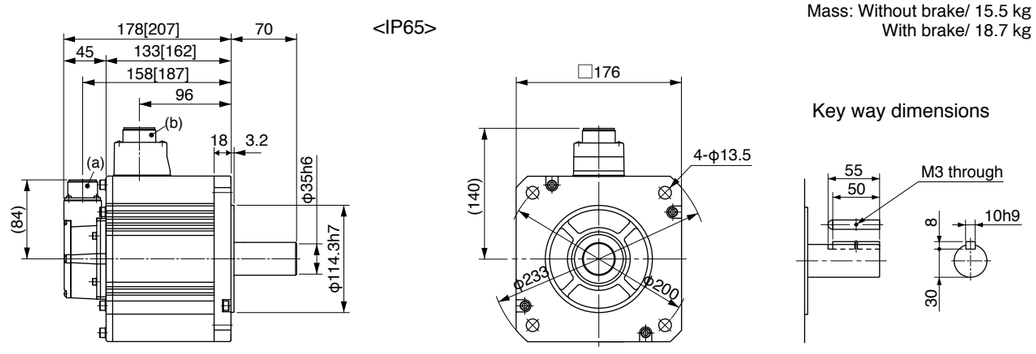


(a) Encoder connector
(b) Motor/Brake connector

* Figures in [ ] represent the dimensions with brake.

[Unit: mm]

**<Cautions>** Reduce the moment of inertia ratio if high speed response operation is required.
Dimensions are subject to change without notice. Contact us or a dealer for the latest information.
Read the Instruction Manual carefully and understand all precautions and remarks before using the products.

# 200 V MDME 5.0 kW [Middle inertia, Middle capacity]

## Specifications

| | | | AC200 V | |
|---|---|---|---|---|
| Motor model *1 | IP65 | | MDME502GC□ | MDME502SC□ |
| | IP67 | | MDME502G1□ | MDME502S1□ |
| Applicable driver *2 | Model No. | A5Ⅱ, A5 series | MFD◇TB3A2 | |
| | | A5ⅡE, A5E series | MFD◇TB3A2E | – |
| | Frame symbol | | F-frame | |
| Power supply capacity (kVA) | | | 7.5 | |
| Rated output (W) | | | 5000 | |
| Rated torque (N·m) | | | 23.9 | |
| Momentary Max. peak torque (N·m) | | | 71.6 | |
| Rated current (A(rms)) | | | 25.9 | |
| Max. current (A(o-p)) | | | 110 | |
| Regenerative brake frequency (times/min) Note)1 | Without option | | 120 | |
| | DV0P4285×2 | | No limit Note)2 | |
| Rated rotational speed (r/min) | | | 2000 | |
| Max. rotational speed (r/min) | | | 3000 | |
| Moment of inertia of rotor ($\times10^{-4}$ kg·m$^2$) | Without brake | | 48.0 | |
| | With brake | | 53.3 | |
| Recommended moment of inertia ratio of the load and the rotor Note)3 | | | 10 times or less | |
| Rotary encoder specifications Note)5 | | | 20-bit Incremental | 17-bit Absolute |
| | Resolution per single turn | | 1048576 | 131072 |

• **Brake specifications** (For details, refer to P.183)
(This brake will be released when it is energized. Do not use this for braking the motor in motion.)

| | |
|---|---|
| Static friction torque (N·m) | 24.5 or more |
| Engaging time (ms) | 80 or less |
| Releasing time (ms) Note)4 | 25 or less |
| Exciting current (DC) (A) | 1.3±10 % |
| Releasing voltage (DC) (V) | 2 or more |
| Exciting voltage (DC) (V) | 24±2.4 |

• **Permissible load** (For details, refer to P.183)

| | | |
|---|---|---|
| During assembly | Radial load P-direction (N) | 1666 |
| | Thrust load A-direction (N) | 784 |
| | Thrust load B-direction (N) | 980 |
| During operation | Radial load P-direction (N) | 784 |
| | Thrust load A, B-direction (N) | 343 |

• For details of Note 1 to Note 5, refer to P.182, P.183.
• Dimensions of Driver, refer to P.45.
*1 Motor specifications: □
*2 The product that the end of driver model designation has "E" is "Position control type". Detail of model designation, refer to P.16.
*3 ◇ in number of applicable driver represents the series. For more information about the part number, please refer to P.16.

## Torque characteristics (at AC200 V of power voltage <Dotted line represents the torque at 10 % less supply voltage.>)

With oil seal

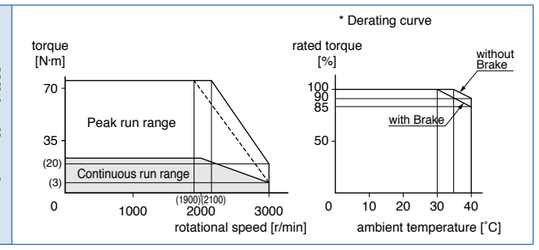


## Dimensions

(For IP67 motor, refer to P.139.)

Mass: Without brake/ 18.6 kg
With brake/ 21.8 kg

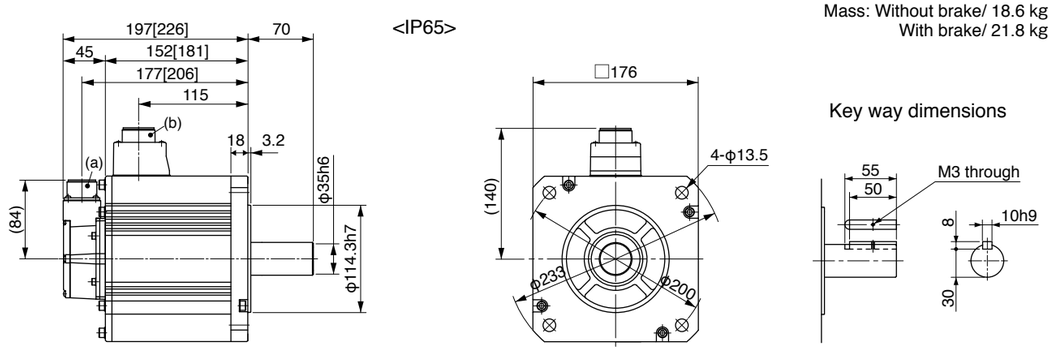


(a) Encoder connector
(b) Motor/Brake connector

* Figures in [ ] represent the dimensions with brake.

[Unit: mm]

**<Cautions>** Reduce the moment of inertia ratio if high speed response operation is required.
Dimensions are subject to change without notice. Contact us or a dealer for the latest information.
Read the Instruction Manual carefully and understand all precautions and remarks before using the products.





# 200 V MDME 7.5 kW [Middle inertia, Middle capacity]

## Specifications

| | | | AC200 V | |
|---|---|---|---|---|
| Motor model *1 | IP65 | | – | – |
| | IP67 | | MDME752G1□ | MDME752S1□ |
| Applicable driver *2 | Model No. | A5Ⅱ, A5 series | MGD◇TC3B4 | |
| | | A5ⅡE, A5E series | – | – |
| | Frame symbol | | G-frame | |
| Power supply capacity (kVA) | | | 11 | |
| Rated output (W) | | | 7500 | |
| Rated torque (N·m) | | | 47.8 | |
| Momentary Max. peak torque (N·m) | | | 119 | |
| Rated current (A(rms)) | | | 44.0 | |
| Max. current (A(o-p)) | | | 165 | |
| Regenerative brake frequency (times/min) Note)1 | Without option | | No limit Note)2 | |
| | DV0P4285×3 | | No limit Note)2 | |
| Rated rotational speed (r/min) | | | 1500 | |
| Max. rotational speed (r/min) | | | 3000 | |
| Moment of inertia of rotor ($\times10^{-4}$ kg·m$^2$) | Without brake | | 101 | |
| | With brake | | 107 | |
| Recommended moment of inertia ratio of the load and the rotor Note)3 | | | 10 times or less | |
| Rotary encoder specifications Note)5 | | | 20-bit Incremental | 17-bit Absolute |
| | Resolution per single turn | | 1048576 | 131072 |

• **Brake specifications** (For details, refer to P.183)
(This brake will be released when it is energized. Do not use this for braking the motor in motion.)

| | |
|---|---|
| Static friction torque (N·m) | 58.8 or more |
| Engaging time (ms) | 150 or less |
| Releasing time (ms) Note)4 | 50 or less |
| Exciting current (DC) (A) | 1.4±10 % |
| Releasing voltage (DC) (V) | 2 or more |
| Exciting voltage (DC) (V) | 24±2.4 |

• **Permissible load** (For details, refer to P.183)

| | | |
|---|---|---|
| During assembly | Radial load P-direction (N) | 2058 |
| | Thrust load A-direction (N) | 980 |
| | Thrust load B-direction (N) | 1176 |
| During operation | Radial load P-direction (N) | 1176 |
| | Thrust load A, B-direction (N) | 490 |

• For details of Note 1 to Note 5, refer to P.182, P.183.
• Dimensions of Driver, refer to P.46.
*1 Motor specifications: □
*2 The product that the end of driver model designation has "E" is "Position control type". Detail of model designation, refer to P.16.
*3 ◇ in number of applicable driver represents the series. For more information about the part number, please refer to P.16.

## Torque characteristics (at AC200 V of power voltage <Dotted line represents the torque at 10 % less supply voltage.>)

With oil seal

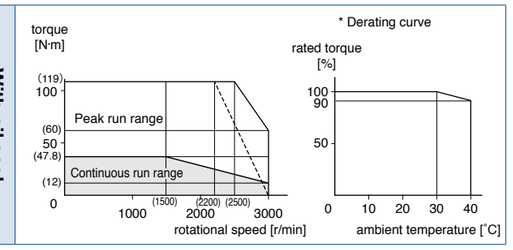


## Dimensions

Mass: Without brake/ 36.4 kg
With brake/ 40.4 kg

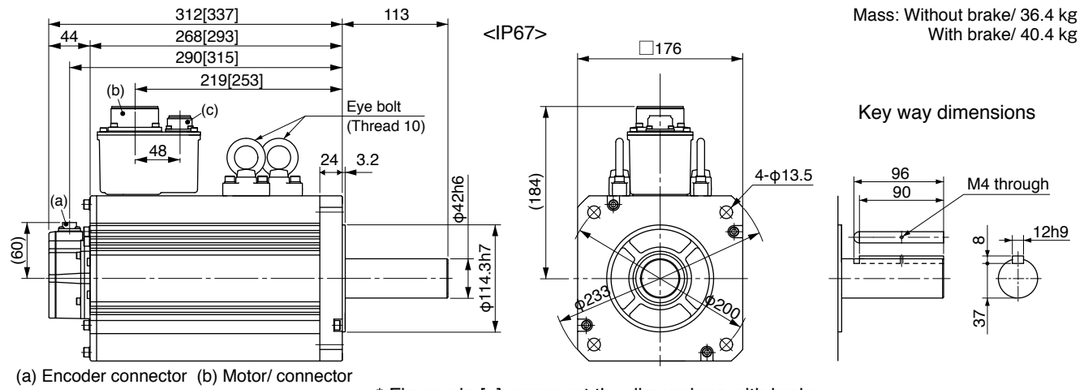


(a) Encoder connector (b) Motor/ connector
(c) Brake connector (only with brake)

* Figures in [ ] represent the dimensions with brake.

[Unit: mm]

**<Cautions>** Reduce the moment of inertia ratio if high speed response operation is required.
Dimensions are subject to change without notice. Contact us or a dealer for the latest information.
Read the Instruction Manual carefully and understand all precautions and remarks before using the products.

# 200 V MDME 11.0 kW [Middle inertia, Middle capacity]

## Specifications

| | | | AC200 V | |
|---|---|---|---|---|
| Motor model *1 | IP65 | | – | – |
| | IP67 | | MDMEC12G1□ | MDMEC12S1□ |
| Applicable driver *2 | Model No. | A5Ⅱ, A5 series | MHD◇TC3B4 | |
| | | A5ⅡE, A5E series | – | – |
| | Frame symbol | | H-frame | |
| Power supply capacity (kVA) | | | 17 | |
| Rated output (W) | | | 11000 | |
| Rated torque (N·m) | | | 70.0 | |
| Momentary Max. peak torque (N·m) | | | 175 | |
| Rated current (A(rms)) | | | 54.2 | |
| Max. current (A(o-p)) | | | 203 | |
| Regenerative brake frequency (times/min) Note)1 | Without option | | No limit Note)2 | |
| | DV0PM20058 | | No limit Note)2 | |
| Rated rotational speed (r/min) | | | 1500 | |
| Max. rotational speed (r/min) | | | 2000 | |
| Moment of inertia of rotor ($\times10^{-4}$ kg·m$^2$) | Without brake | | 212 | |
| | With brake | | 220 | |
| Recommended moment of inertia ratio of the load and the rotor Note)3 | | | 10 times or less | |
| Rotary encoder specifications Note)5 | | | 20-bit Incremental | 17-bit Absolute |
| | Resolution per single turn | | 1048576 | 131072 |

• **Brake specifications** (For details, refer to P.183)
(This brake will be released when it is energized.
Do not use this for braking the motor in motion.)

| | |
|---|---|
| Static friction torque (N·m) | 100 or more |
| Engaging time (ms) | 300 or less |
| Releasing time (ms) Note)4 | 140 or less |
| Exciting current (DC) (A) | 1.08±10 % |
| Releasing voltage (DC) (V) | 2 or more |
| Exciting voltage (DC) (V) | 24±2.4 |

• **Permissible load** (For details, refer to P.183)

| | | |
|---|---|---|
| During assembly | Radial load P-direction (N) | 4508 |
| | Thrust load A-direction (N) | 1470 |
| | Thrust load B-direction (N) | 1764 |
| During operation | Radial load P-direction (N) | 2254 |
| | Thrust load A, B-direction (N) | 686 |

• For details of Note 1 to Note 5, refer to P.182, P.183.
• Dimensions of Driver, refer to P.47.
*1 Motor specifications: □
*2 The product that the end of driver model designation has "E" is "Position control type". Detail of model designation, refer to P.16.
*3 ◇ in number of applicable driver represents the series. For more information about the part number, please refer to P.16.

## Torque characteristics (at AC200 V of power voltage <Dotted line represents the torque at 10 % less supply voltage.>)

With oil seal

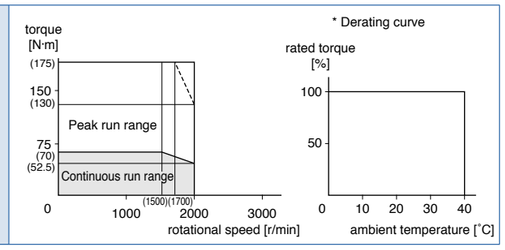


## Dimensions

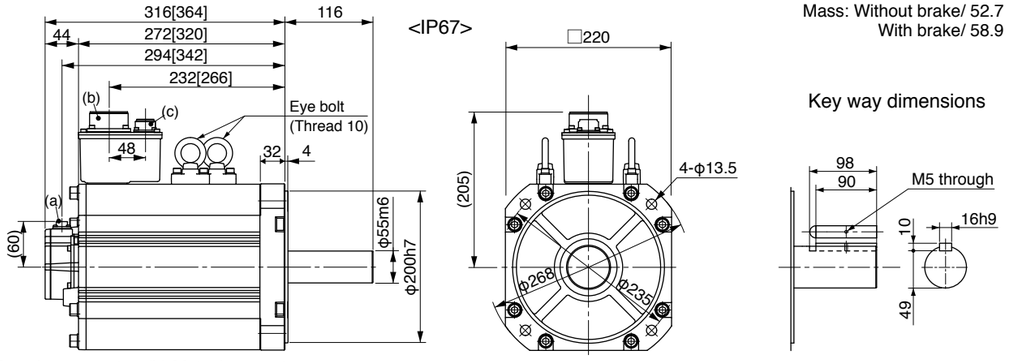


Mass: Without brake/ 52.7 kg
With brake/ 58.9 kg

(a) Encoder connector (b) Motor/ connector
(c) Brake connector (only with brake)

* Figures in [ ] represent the dimensions with brake.

[Unit: mm]

**<Cautions>** Reduce the moment of inertia ratio if high speed response operation is required.
Dimensions are subject to change without notice. Contact us or a dealer for the latest information.
Read the Instruction Manual carefully and understand all precautions and remarks before using the products.





# 200 V MDME 15.0 kW [Middle inertia, Middle capacity]

## Specifications

| | | | AC200 V | |
|---|---|---|---|---|
| Motor model *1 | IP65 | | – | – |
| | IP67 | | MDMEC52G1□ | MDMEC52S1□ |
| Applicable driver *2 | Model No. | A5Ⅱ, A5 series | MHD◇TC3B4 | |
| | | A5ⅡE, A5E series | – | – |
| | Frame symbol | | H-frame | |
| Power supply capacity (kVA) | | | 22 | |
| Rated output (W) | | | 15000 | |
| Rated torque (N·m) | | | 95.5 | |
| Momentary Max. peak torque (N·m) | | | 224 | |
| Rated current (A(rms)) | | | 66.1 | |
| Max. current (A(o-p)) | | | 236 | |
| Regenerative brake frequency (times/min) Note)1 | Without option | | No limit Note)2 | |
| | DV0PM20058 | | No limit Note)2 | |
| Rated rotational speed (r/min) | | | 1500 | |
| Max. rotational speed (r/min) | | | 2000 | |
| Moment of inertia of rotor ($\times10^{-4}$ kg·m$^2$) | Without brake | | 302 | |
| | With brake | | 311 | |
| Recommended moment of inertia ratio of the load and the rotor Note)3 | | | 10 times or less | |
| Rotary encoder specifications Note)5 | | | 20-bit Incremental | 17-bit Absolute |
| | Resolution per single turn | | 1048576 | 131072 |

• **Brake specifications** (For details, refer to P.183)
(This brake will be released when it is energized.
Do not use this for braking the motor in motion.)

| | |
|---|---|
| Static friction torque (N·m) | 100 or more |
| Engaging time (ms) | 300 or less |
| Releasing time (ms) Note)4 | 140 or less |
| Exciting current (DC) (A) | 1.08±10 % |
| Releasing voltage (DC) (V) | 2 or more |
| Exciting voltage (DC) (V) | 24±2.4 |

• **Permissible load** (For details, refer to P.183)

| | | |
|---|---|---|
| During assembly | Radial load P-direction (N) | 4508 |
| | Thrust load A-direction (N) | 1470 |
| | Thrust load B-direction (N) | 1764 |
| During operation | Radial load P-direction (N) | 2254 |
| | Thrust load A, B-direction (N) | 686 |

• For details of Note 1 to Note 5, refer to P.182, P.183.
• Dimensions of Driver, refer to P.47.
*1 Motor specifications: □
*2 The product that the end of driver model designation has "E" is "Position control type". Detail of model designation, refer to P.16.
*3 ◇ in number of applicable driver represents the series. For more information about the part number, please refer to P.16.

## Torque characteristics (at AC200 V of power voltage <Dotted line represents the torque at 10 % less supply voltage.>)

With oil seal

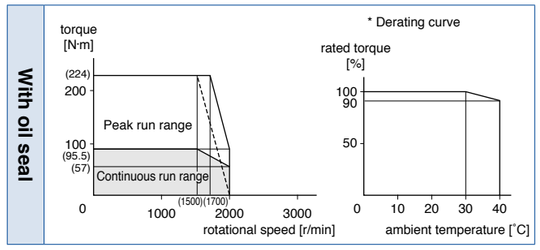


## Dimensions

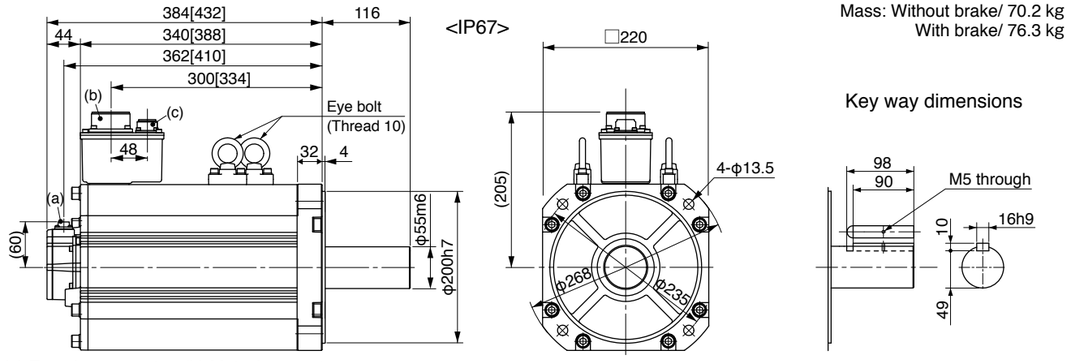


Mass: Without brake/ 70.2 kg
With brake/ 76.3 kg

(a) Encoder connector (b) Motor/ connector
(c) Brake connector (only with brake)

* Figures in [ ] represent the dimensions with brake.

[Unit: mm]

**<Cautions>** Reduce the moment of inertia ratio if high speed response operation is required.
Dimensions are subject to change without notice. Contact us or a dealer for the latest information.
Read the Instruction Manual carefully and understand all precautions and remarks before using the products.

# 200 V MFME 1.5 kW [Middle inertia, Middle capacity Flat type]

## Specifications

| | | | AC200 V | |
|---|---|---|---|---|
| Motor model *1 | IP65 | | – | – |
| | IP67 | | MFME152G1□ | MFME152S1□ |
| Applicable driver *2 | Model No. | A5Ⅱ, A5 series | MDD◇T5540 | |
| | | A5ⅡE, A5E series | MDD◇T5540E | – |
| | Frame symbol | | D-frame | |
| Power supply capacity (kVA) | | | 2.3 | |
| Rated output (W) | | | 1500 | |
| Rated torque (N·m) | | | 7.16 | |
| Momentary Max. peak torque (N·m) | | | 21.5 | |
| Rated current (A(rms)) | | | 7.5 | |
| Max. current (A(o-p)) | | | 32 | |
| Regenerative brake frequency (times/min) Note)1 | Without option | | 100 | |
| | DV0P4284 | | No limit Note)2 | |
| Rated rotational speed (r/min) | | | 2000 | |
| Max. rotational speed (r/min) | | | 3000 | |
| Moment of inertia of rotor ($\times 10^{-4}$ kg·m$^2$) | Without brake | | 18.2 | |
| | With brake | | 23.5 | |
| Recommended moment of inertia ratio of the load and the rotor Note)3 | | | 10 times or less | |
| Rotary encoder specifications Note)5 | | | 20-bit Incremental | 17-bit Absolute |
| | Resolution per single turn | | 1048576 | 131072 |

• **Brake specifications** (For details, refer to P.183)
(This brake will be released when it is energized. Do not use this for braking the motor in motion.)

| | |
|---|---|
| Static friction torque (N·m) | 7.8 or more |
| Engaging time (ms) | 80 or less |
| Releasing time (ms) Note)4 | 35 or less |
| Exciting current (DC) (A) | 0.83±10 % |
| Releasing voltage (DC) (V) | 2 or more |
| Exciting voltage (DC) (V) | 24±2.4 |

• **Permissible load** (For details, refer to P.183)

| | | |
|---|---|---|
| During assembly | Radial load P-direction (N) | 980 |
| | Thrust load A-direction (N) | 588 |
| | Thrust load B-direction (N) | 686 |
| During operation | Radial load P-direction (N) | 490 |
| | Thrust load A, B-direction (N) | 196 |

• For details of Note 1 to Note 5, refer to P.182, P.183.
• Dimensions of Driver, refer to P.43.
*1 Motor specifications: □
*2 The product that the end of driver model designation has "E" is "Position control type". Detail of model designation, refer to P.16.
*3 ◇ in number of applicable driver represents the series. For more information about the part number, please refer to P.16.

## Torque characteristics (at AC200 V of power voltage <Dotted line represents the torque at 10 % less supply voltage.>)

With oil seal

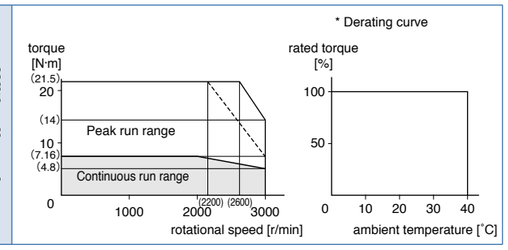


## Dimensions

Mass: Without brake/ 9.5 kg
With brake/ 12.5 kg

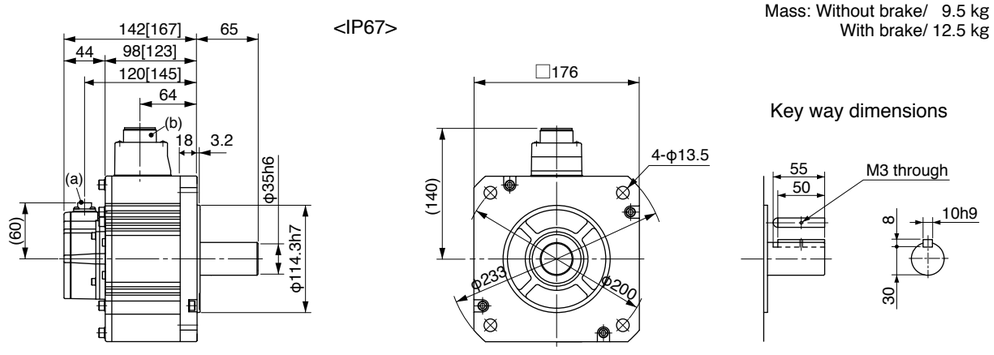


(a) Encoder connector
(b) Motor/Brake connector

* Figures in [ ] represent the dimensions with brake.

[Unit: mm]

**<Cautions>** Reduce the moment of inertia ratio if high speed response operation is required.
Dimensions are subject to change without notice. Contact us or a dealer for the latest information.
Read the Instruction Manual carefully and understand all precautions and remarks before using the products.





# 200 V MFME 2.5 kW [Middle inertia, Middle capacity Flat type]

## Specifications

| | | | AC200 V | |
|---|---|---|---|---|
| Motor model *1 | IP65 | | – | – |
| | IP67 | | MFME252G1□ | MFME252S1□ |
| Applicable driver *2 | Model No. | A5Ⅱ, A5 series | MED◇T7364 | |
| | | A5ⅡE, A5E series | MED◇T7364E | – |
| | Frame symbol | | E-frame | |
| Power supply capacity (kVA) | | | 3.8 | |
| Rated output (W) | | | 2500 | |
| Rated torque (N·m) | | | 11.9 | |
| Momentary Max. peak torque (N·m) | | | 30.4 | |
| Rated current (A(rms)) | | | 13.4 | |
| Max. current (A(o-p)) | | | 57 | |
| Regenerative brake frequency (times/min) Note)1 | Without option | | 75 | |
| | DV0P4285 | | No limit Note)2 | |
| Rated rotational speed (r/min) | | | 2000 | |
| Max. rotational speed (r/min) | | | 3000 | |
| Moment of inertia of rotor ($\times 10^{-4}$ kg·m$^2$) | Without brake | | 35.8 | |
| | With brake | | 45.2 | |
| Recommended moment of inertia ratio of the load and the rotor Note)3 | | | 10 times or less | |
| Rotary encoder specifications Note)5 | | | 20-bit Incremental | 17-bit Absolute |
| | Resolution per single turn | | 1048576 | 131072 |

• **Brake specifications** (For details, refer to P.183)
(This brake will be released when it is energized. Do not use this for braking the motor in motion.)

| | |
|---|---|
| Static friction torque (N·m) | 21.6 or more |
| Engaging time (ms) | 150 or less |
| Releasing time (ms) Note)4 | 100 or less |
| Exciting current (DC) (A) | 0.75±10 % |
| Releasing voltage (DC) (V) | 2 or more |
| Exciting voltage (DC) (V) | 24±2.4 |

• **Permissible load** (For details, refer to P.183)

| | | |
|---|---|---|
| During assembly | Radial load P-direction (N) | 1862 |
| | Thrust load A-direction (N) | 686 |
| | Thrust load B-direction (N) | 686 |
| During operation | Radial load P-direction (N) | 784 |
| | Thrust load A, B-direction (N) | 294 |

• For details of Note 1 to Note 5, refer to P.182, P.183.
• Dimensions of Driver, refer to P.44.
*1 Motor specifications: □
*2 The product that the end of driver model designation has "E" is "Position control type". Detail of model designation, refer to P.16.
*3 ◇ in number of applicable driver represents the series. For more information about the part number, please refer to P.16.

## Torque characteristics (at AC200 V of power voltage <Dotted line represents the torque at 10 % less supply voltage.>)

With oil seal

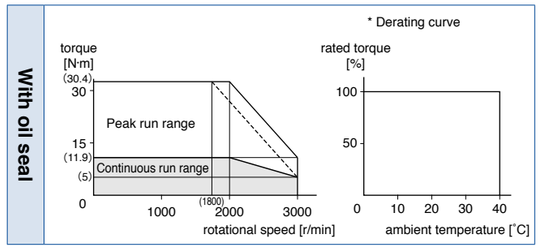


## Dimensions

Mass: Without brake/ 13.1 kg
With brake/ 17.2 kg

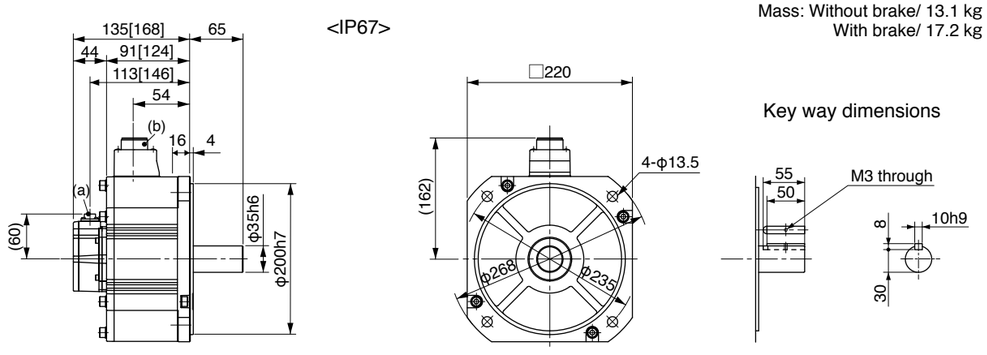


(a) Encoder connector
(b) Motor/Brake connector

* Figures in [ ] represent the dimensions with brake.

[Unit: mm]

**<Cautions>** Reduce the moment of inertia ratio if high speed response operation is required.
Dimensions are subject to change without notice. Contact us or a dealer for the latest information.
Read the Instruction Manual carefully and understand all precautions and remarks before using the products.

# 200 V MFME 4.5 kW [Middle inertia, Middle capacity Flat type]

## Specifications

| | | | AC200 V | |
|---|---|---|---|---|
| Motor model *1 | IP65 | | – | – |
| | IP67 | | MFME452G1□ | MFME452S1□ |
| Applicable driver *2 | Model No. | A5Ⅱ, A5 series | MFD◇TB3A2 | |
| | | A5ⅡE, A5E series | MFD◇TB3A2E | – |
| | Frame symbol | | F-frame | |
| Power supply capacity (kVA) | | | 6.8 | |
| Rated output (W) | | | 4500 | |
| Rated torque (N·m) | | | 21.5 | |
| Momentary Max. peak torque (N·m) | | | 54.9 | |
| Rated current (A(rms)) | | | 24.7 | |
| Max. current (A(o-p)) | | | 105 | |
| Regenerative brake frequency (times/min) Note)1 | Without option | | 67 | |
| | DV0P4285×2 | | 375 | |
| Rated rotational speed (r/min) | | | 2000 | |
| Max. rotational speed (r/min) | | | 3000 | |
| Moment of inertia of rotor ($\times10^{-4}$ kg·m$^2$) | Without brake | | 63.1 | |
| | With brake | | 70.9 | |
| Recommended moment of inertia ratio of the load and the rotor Note)3 | | | 10 times or less | |
| Rotary encoder specifications Note)5 | | | 20-bit Incremental | 17-bit Absolute |
| | Resolution per single turn | | 1048576 | 131072 |

• **Brake specifications** (For details, refer to P.183)
(This brake will be released when it is energized. Do not use this for braking the motor in motion.)

| | |
|---|---|
| Static friction torque (N·m) | 31.4 or more |
| Engaging time (ms) | 150 or less |
| Releasing time (ms) Note)4 | 100 or less |
| Exciting current (DC) (A) | 0.75±10 % |
| Releasing voltage (DC) (V) | 2 or more |
| Exciting voltage (DC) (V) | 24±2.4 |

• **Permissible load** (For details, refer to P.183)

| | | |
|---|---|---|
| During assembly | Radial load P-direction (N) | 1862 |
| | Thrust load A-direction (N) | 686 |
| | Thrust load B-direction (N) | 686 |
| During operation | Radial load P-direction (N) | 784 |
| | Thrust load A, B-direction (N) | 294 |

• For details of Note 1 to Note 5, refer to P.182, P.183.
• Dimensions of Driver, refer to P.45.
*1 Motor specifications: □
*2 The product that the end of driver model designation has "E" is "Position control type". Detail of model designation, refer to P.16.
*3 ◇ in number of applicable driver represents the series. For more information about the part number, please refer to P.16.

## Torque characteristics (at AC200 V of power voltage <Dotted line represents the torque at 10 % less supply voltage.>)

With oil seal

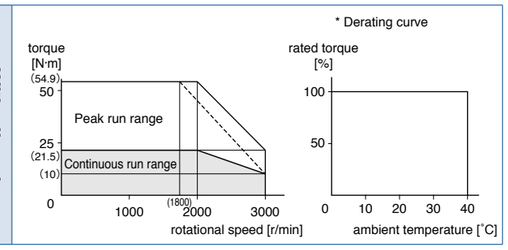


## Dimensions

Mass: Without brake/ 18.2 kg
With brake/ 23.1 kg

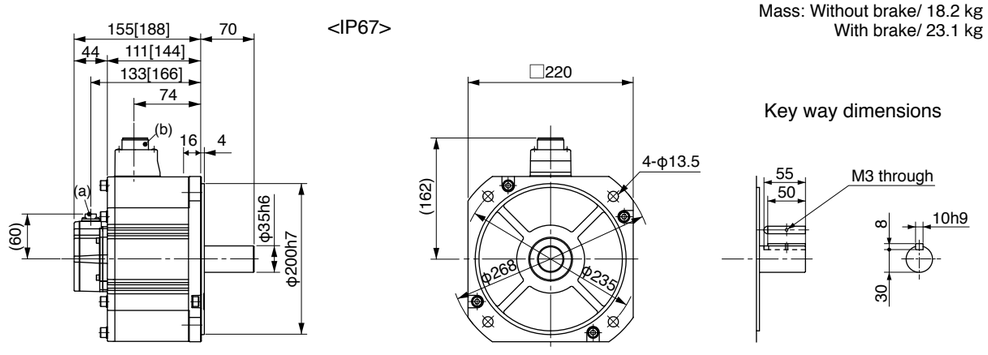


(a) Encoder connector
(b) Motor/Brake connector

* Figures in [ ] represent the dimensions with brake.

[Unit: mm]

**<Cautions>** Reduce the moment of inertia ratio if high speed response operation is required.
Dimensions are subject to change without notice. Contact us or a dealer for the latest information.
Read the Instruction Manual carefully and understand all precautions and remarks before using the products.





# 200 V MGME 0.9 kW [Middle inertia, Middle capacity]

## Specifications

| | | | AC200 V | |
|---|---|---|---|---|
| Motor model *1 | IP65 | | MGME092GC□ | MGME092SC□ |
| | IP67 | | MGME092G1□ | MGME092S1□ |
| Applicable driver *2 | Model No. | A5Ⅱ, A5 series | MDD◇T5540 | |
| | | A5ⅡE, A5E series | MDD◇T5540E | – |
| | Frame symbol | | D-frame | |
| Power supply capacity (kVA) | | | 1.8 | |
| Rated output (W) | | | 900 | |
| Rated torque (N·m) | | | 8.59 | |
| Momentary Max. peak torque (N·m) | | | 19.3 | |
| Rated current (A(rms)) | | | 7.6 | |
| Max. current (A(o-p)) | | | 24 | |
| Regenerative brake frequency (times/min) Note)1 | Without option | | No limit Note)2 | |
| | DV0P4284 | | No limit Note)2 | |
| Rated rotational speed (r/min) | | | 1000 | |
| Max. rotational speed (r/min) | | | 2000 | |
| Moment of inertia of rotor ($\times10^{-4}$ kg·m$^2$) | Without brake | | 6.70 | |
| | With brake | | 7.99 | |
| Recommended moment of inertia ratio of the load and the rotor Note)3 | | | 10 times or less | |
| Rotary encoder specifications Note)5 | | | 20-bit Incremental | 17-bit Absolute |
| | Resolution per single turn | | 1048576 | 131072 |

• **Brake specifications** (For details, refer to P.183)
(This brake will be released when it is energized. Do not use this for braking the motor in motion.)

| | |
|---|---|
| Static friction torque (N·m) | 13.7 or more |
| Engaging time (ms) | 100 or less |
| Releasing time (ms) Note)4 | 50 or less |
| Exciting current (DC) (A) | 0.79±10 % |
| Releasing voltage (DC) (V) | 2 or more |
| Exciting voltage (DC) (V) | 24±2.4 |

• **Permissible load** (For details, refer to P.183)

| | | |
|---|---|---|
| During assembly | Radial load P-direction (N) | 980 |
| | Thrust load A-direction (N) | 588 |
| | Thrust load B-direction (N) | 686 |
| During operation | Radial load P-direction (N) | 686 |
| | Thrust load A, B-direction (N) | 196 |

• For details of Note 1 to Note 5, refer to P.182, P.183.
• Dimensions of Driver, refer to P.43.
*1 Motor specifications: □
*2 The product that the end of driver model designation has "E" is "Position control type". Detail of model designation, refer to P.16.
*3 ◇ in number of applicable driver represents the series. For more information about the part number, please refer to P.16.

## Torque characteristics (at AC200 V of power voltage <Dotted line represents the torque at 10 % less supply voltage.>)

With oil seal

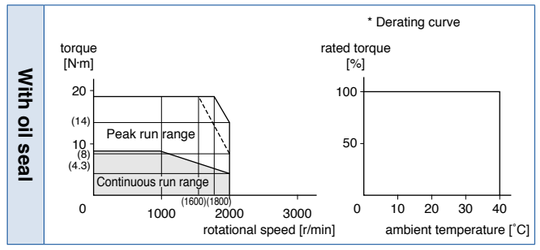


## Dimensions

(For IP67 motor, refer to P.139.)

Mass: Without brake/ 6.7 kg
With brake/ 8.2 kg

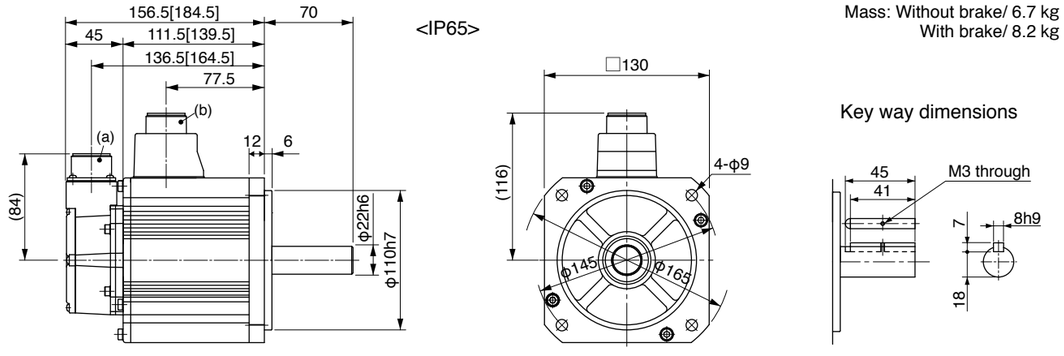


(a) Encoder connector
(b) Motor/Brake connector

* Figures in [ ] represent the dimensions with brake.

[Unit: mm]

**<Cautions>** Reduce the moment of inertia ratio if high speed response operation is required.
Dimensions are subject to change without notice. Contact us or a dealer for the latest information.
Read the Instruction Manual carefully and understand all precautions and remarks before using the products.

# 200 V MGME 2.0 kW [Middle inertia, Middle capacity]

## Specifications

| | | | AC200 V | |
|---|---|---|---|---|
| Motor model *1 | IP65 | | MGME202GC□ | MGME202SC□ |
| | IP67 | | MGME202G1□ | MGME202S1□ |
| Applicable driver *2 | Model No. | A5Ⅱ, A5 series | MFD◇TA390 | |
| | | A5ⅡE, A5E series | MFD◇TA390E | – |
| | Frame symbol | | F-frame | |
| Power supply capacity (kVA) | | | 3.8 | |
| Rated output (W) | | | 2000 | |
| Rated torque (N·m) | | | 19.1 | |
| Momentary Max. peak torque (N·m) | | | 47.7 | |
| Rated current (A(rms)) | | | 17.0 | |
| Max. current (A(o-p)) | | | 60 | |
| Regenerative brake frequency (times/min) Note)1 | Without option | | No limit Note)2 | |
| | DV0P4285×2 | | No limit Note)2 | |
| Rated rotational speed (r/min) | | | 1000 | |
| Max. rotational speed (r/min) | | | 2000 | |
| Moment of inertia of rotor ($\times 10^{-4}$ kg·m$^2$) | Without brake | | 30.3 | |
| | With brake | | 35.6 | |
| Recommended moment of inertia ratio of the load and the rotor Note)3 | | | 10 times or less | |
| Rotary encoder specifications Note)5 | | | 20-bit Incremental | 17-bit Absolute |
| | Resolution per single turn | | 1048576 | 131072 |

• **Brake specifications** (For details, refer to P.183)
(This brake will be released when it is energized.
Do not use this for braking the motor in motion.)

| | |
|---|---|
| Static friction torque (N·m) | 24.5 or more |
| Engaging time (ms) | 80 or less |
| Releasing time (ms) Note)4 | 25 or less |
| Exciting current (DC) (A) | 1.3±10 % |
| Releasing voltage (DC) (V) | 2 or more |
| Exciting voltage (DC) (V) | 24±2.4 |

• **Permissible load** (For details, refer to P.183)

| | | |
|---|---|---|
| During assembly | Radial load P-direction (N) | 1666 |
| | Thrust load A-direction (N) | 784 |
| | Thrust load B-direction (N) | 980 |
| During operation | Radial load P-direction (N) | 1176 |
| | Thrust load A, B-direction (N) | 490 |

• For details of Note 1 to Note 5, refer to P.182, P.183.
• Dimensions of Driver, refer to P.45.
*1 Motor specifications: □
*2 The product that the end of driver model designation has "E" is "Position control type". Detail of model designation, refer to P.16.
*3 ◇ in number of applicable driver represents the series. For more information about the part number, please refer to P.16.

## Torque characteristics (at AC200 V of power voltage <Dotted line represents the torque at 10 % less supply voltage.>)

With oil seal

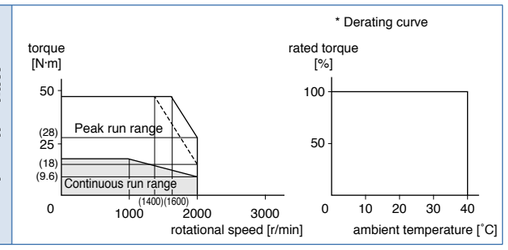


## Dimensions

(For IP67 motor, refer to P.139.)

Mass: Without brake/ 14.0 kg
With brake/ 17.5 kg

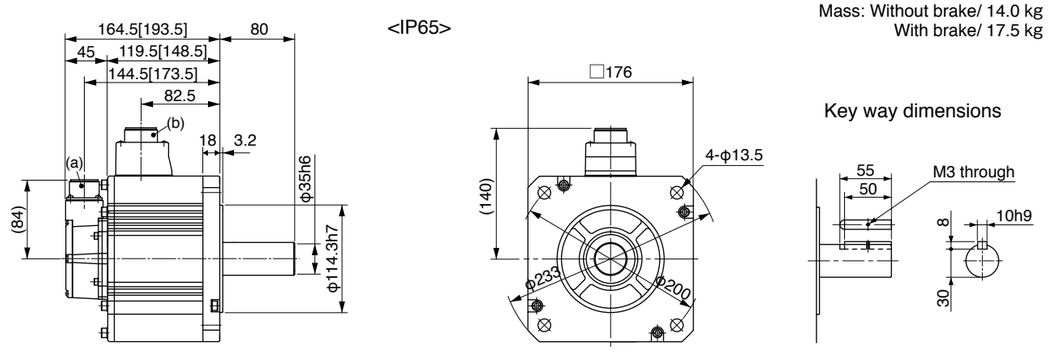


(a) Encoder connector
(b) Motor/Brake connector

* Figures in [ ] represent the dimensions with brake.

[Unit: mm]

**<Cautions>** Reduce the moment of inertia ratio if high speed response operation is required.
Dimensions are subject to change without notice. Contact us or a dealer for the latest information.
Read the Instruction Manual carefully and understand all precautions and remarks before using the products.





# 200 V MGME 3.0 kW [Middle inertia, Middle capacity]

## Specifications

| | | | AC200 V | |
|---|---|---|---|---|
| Motor model *1 | IP65 | | MGME302GC□ | MGME302SC□ |
| | IP67 | | MGME302G1□ | MGME302S1□ |
| Applicable driver *2 | Model No. | A5Ⅱ, A5 series | MFD◇TB3A2 | |
| | | A5ⅡE, A5E series | MFD◇TB3A2E | – |
| | Frame symbol | | F-frame | |
| Power supply capacity (kVA) | | | 4.5 | |
| Rated output (W) | | | 3000 | |
| Rated torque (N·m) | | | 28.7 | |
| Momentary Max. peak torque (N·m) | | | 71.7 | |
| Rated current (A(rms)) | | | 22.6 | |
| Max. current (A(o-p)) | | | 80 | |
| Regenerative brake frequency (times/min) Note)1 | Without option | | No limit Note)2 | |
| | DV0P4285×2 | | No limit Note)2 | |
| Rated rotational speed (r/min) | | | 1000 | |
| Max. rotational speed (r/min) | | | 2000 | |
| Moment of inertia of rotor ($\times 10^{-4}$ kg·m$^2$) | Without brake | | 48.4 | |
| | With brake | | 53.7 | |
| Recommended moment of inertia ratio of the load and the rotor Note)3 | | | 10 times or less | |
| Rotary encoder specifications Note)5 | | | 20-bit Incremental | 17-bit Absolute |
| | Resolution per single turn | | 1048576 | 131072 |

• **Brake specifications** (For details, refer to P.183)
(This brake will be released when it is energized.
Do not use this for braking the motor in motion.)

| | |
|---|---|
| Static friction torque (N·m) | 58.8 or more |
| Engaging time (ms) | 150 or less |
| Releasing time (ms) Note)4 | 50 or less |
| Exciting current (DC) (A) | 1.4±10 % |
| Releasing voltage (DC) (V) | 2 or more |
| Exciting voltage (DC) (V) | 24±2.4 |

• **Permissible load** (For details, refer to P.183)

| | | |
|---|---|---|
| During assembly | Radial load P-direction (N) | 2058 |
| | Thrust load A-direction (N) | 980 |
| | Thrust load B-direction (N) | 1176 |
| During operation | Radial load P-direction (N) | 1470 |
| | Thrust load A, B-direction (N) | 490 |

• For details of Note 1 to Note 5, refer to P.182, P.183.
• Dimensions of Driver, refer to P.45.
*1 Motor specifications: □
*2 The product that the end of driver model designation has "E" is "Position control type". Detail of model designation, refer to P.16.
*3 ◇ in number of applicable driver represents the series. For more information about the part number, please refer to P.16.

## Torque characteristics (at AC200 V of power voltage <Dotted line represents the torque at 10 % less supply voltage.>)

With oil seal

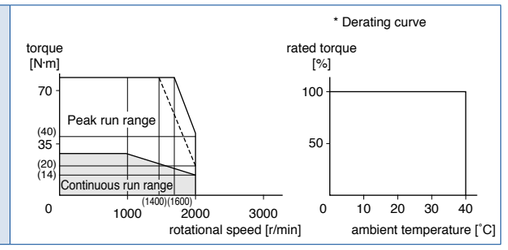


## Dimensions

(For IP67 motor, refer to P.139.)

Mass: Without brake/ 20.0 kg
With brake/ 23.5 kg

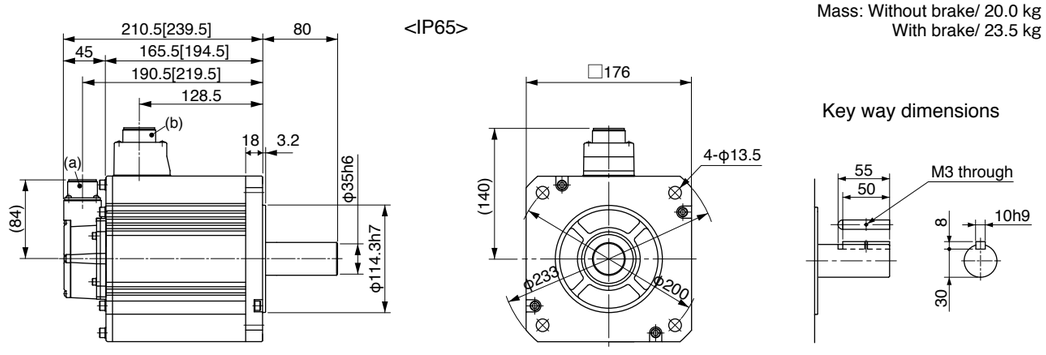


(a) Encoder connector
(b) Motor/Brake connector

* Figures in [ ] represent the dimensions with brake.

[Unit: mm]

**<Cautions>** Reduce the moment of inertia ratio if high speed response operation is required.
Dimensions are subject to change without notice. Contact us or a dealer for the latest information.
Read the Instruction Manual carefully and understand all precautions and remarks before using the products.

# 200 V MGME 4.5 kW [Middle inertia, Middle capacity]

## Specifications

| | | | AC200 V | |
|---|---|---|---|---|
| Motor model *1 | IP65 | | – | – |
| | IP67 | | MGME452G1□ | MGME452S1□ |
| Applicable driver *2 | Model No. | A5Ⅱ, A5 series | MFD◇TB3A2 | |
| | | A5ⅡE, A5E series | MFD◇TB3A2E | – |
| | Frame symbol | | F-frame | |
| Power supply capacity (kVA) | | | 7.5 | |
| Rated output (W) | | | 4500 | |
| Rated torque (N·m) | | | 43.0 | |
| Momentary Max. peak torque (N·m) | | | 107 | |
| Rated current (A(rms)) | | | 29.7 | |
| Max. current (A(o-p)) | | | 110 | |
| Regenerative brake frequency (times/min) Note)1 | Without option | | No limit Note)2 | |
| | DV0P4285×2 | | No limit Note)2 | |
| Rated rotational speed (r/min) | | | 1000 | |
| Max. rotational speed (r/min) | | | 2000 | |
| Moment of inertia of rotor ($\times 10^{-4}$ kg·m$^2$) | Without brake | | 79.1 | |
| | With brake | | 84.4 | |
| Recommended moment of inertia ratio of the load and the rotor Note)3 | | | 10 times or less | |
| Rotary encoder specifications Note)5 | | | 20-bit Incremental | 17-bit Absolute |
| | Resolution per single turn | | 1048576 | 131072 |

• **Brake specifications** (For details, refer to P.183)
(This brake will be released when it is energized.
Do not use this for braking the motor in motion.)

| | |
|---|---|
| Static friction torque (N·m) | 58.8 or more |
| Engaging time (ms) | 150 or less |
| Releasing time (ms) Note)4 | 50 or less |
| Exciting current (DC) (A) | 1.4±10 % |
| Releasing voltage (DC) (V) | 2 or more |
| Exciting voltage (DC) (V) | 24±2.4 |

• **Permissible load** (For details, refer to P.183)

| | | |
|---|---|---|
| During assembly | Radial load P-direction (N) | 2058 |
| | Thrust load A-direction (N) | 980 |
| | Thrust load B-direction (N) | 1176 |
| During operation | Radial load P-direction (N) | 1470 |
| | Thrust load A, B-direction (N) | 490 |

• For details of Note 1 to Note 5, refer to P.182, P.183.
• Dimensions of Driver, refer to P.45.
*1 Motor specifications: □
*2 The product that the end of driver model designation has "E" is "Position control type". Detail of model designation, refer to P.16.
*3 ◇ in number of applicable driver represents the series. For more information about the part number, please refer to P.16.

## Torque characteristics (at AC200 V of power voltage <Dotted line represents the torque at 10 % less supply voltage.>)

With oil seal

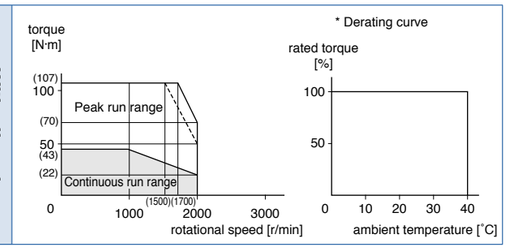


## Dimensions

Mass: Without brake/ 29.4 kg
With brake/ 33.0 kg

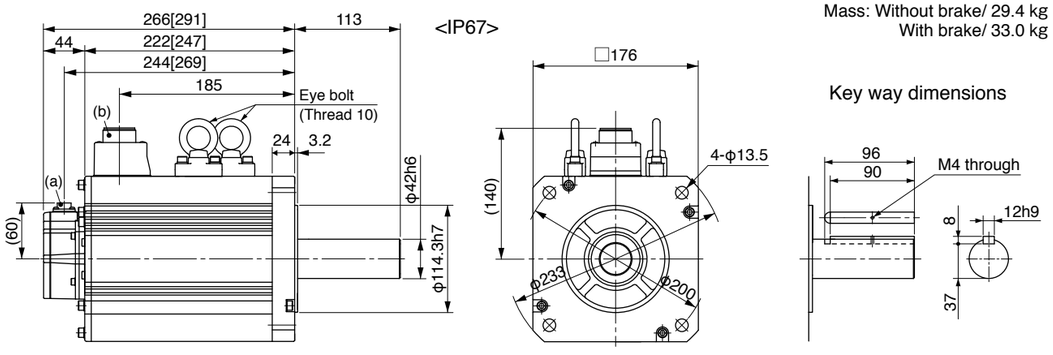


(a) Encoder connector
(b) Motor/Brake connector

* Figures in [ ] represent the dimensions with brake.

[Unit: mm]

**<Cautions>** Reduce the moment of inertia ratio if high speed response operation is required.
Dimensions are subject to change without notice. Contact us or a dealer for the latest information.
Read the Instruction Manual carefully and understand all precautions and remarks before using the products.





# 200 V MGME 6.0 kW [Middle inertia, Middle capacity]

## Specifications

| | | | AC200 V | |
|---|---|---|---|---|
| Motor model *1 | IP65 | | – | – |
| | IP67 | | MGME602G1□ | MGME602S1□ |
| Applicable driver *2 | Model No. | A5Ⅱ, A5 series | MGD◇TC3B4 | |
| | | A5ⅡE, A5E series | — | – |
| | Frame symbol | | G-frame | |
| Power supply capacity (kVA) | | | 9.0 | |
| Rated output (W) | | | 6000 | |
| Rated torque (N·m) | | | 57.3 | |
| Momentary Max. peak torque (N·m) | | | 143 | |
| Rated current (A(rms)) | | | 38.8 | |
| Max. current (A(o-p)) | | | 149 | |
| Regenerative brake frequency (times/min) Note)1 | Without option | | No limit Note)2 | |
| | DV0P4285×4 | | No limit Note)2 | |
| Rated rotational speed (r/min) | | | 1000 | |
| Max. rotational speed (r/min) | | | 2000 | |
| Moment of inertia of rotor ($\times 10^{-4}$ kg·m$^2$) | Without brake | | 101 | |
| | With brake | | 107 | |
| Recommended moment of inertia ratio of the load and the rotor Note)3 | | | 10 times or less | |
| Rotary encoder specifications Note)5 | | | 20-bit Incremental | 17-bit Absolute |
| | Resolution per single turn | | 1048576 | 131072 |

• **Brake specifications** (For details, refer to P.183)
(This brake will be released when it is energized.
Do not use this for braking the motor in motion.)

| | |
|---|---|
| Static friction torque (N·m) | 58.8 or more |
| Engaging time (ms) | 150 or less |
| Releasing time (ms) Note)4 | 50 or less |
| Exciting current (DC) (A) | 1.4±10 % |
| Releasing voltage (DC) (V) | 2 or more |
| Exciting voltage (DC) (V) | 24±2.4 |

• **Permissible load** (For details, refer to P.183)

| | | |
|---|---|---|
| During assembly | Radial load P-direction (N) | 2058 |
| | Thrust load A-direction (N) | 980 |
| | Thrust load B-direction (N) | 1176 |
| During operation | Radial load P-direction (N) | 1764 |
| | Thrust load A, B-direction (N) | 588 |

• For details of Note 1 to Note 5, refer to P.182, P.183.
• Dimensions of Driver, refer to P.46.
*1 Motor specifications: □
*2 The product that the end of driver model designation has "E" is "Position control type". Detail of model designation, refer to P.16.
*3 ◇ in number of applicable driver represents the series. For more information about the part number, please refer to P.16.

## Torque characteristics (at AC200 V of power voltage <Dotted line represents the torque at 10 % less supply voltage.>)

With oil seal

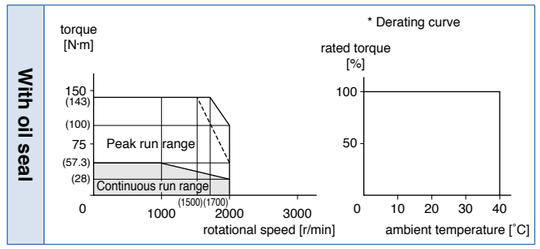


## Dimensions

Mass: Without brake/ 36.4 kg
With brake/ 40.4 kg

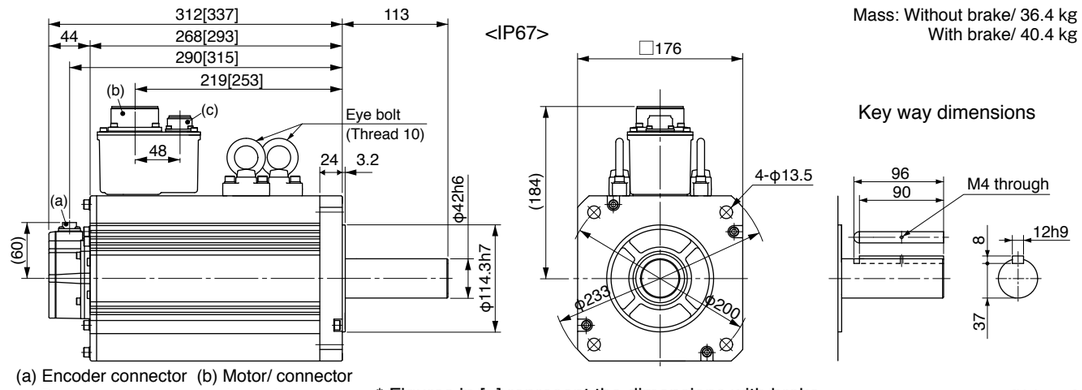


(a) Encoder connector (b) Motor/ connector
(c) Brake connector (only with brake)

* Figures in [ ] represent the dimensions with brake.

[Unit: mm]

**<Cautions>** Reduce the moment of inertia ratio if high speed response operation is required.
Dimensions are subject to change without notice. Contact us or a dealer for the latest information.
Read the Instruction Manual carefully and understand all precautions and remarks before using the products.

# 200 V MHME 1.0 kW [High inertia, Middle capacity]

## Specifications

| | | | AC200 V | |
|---|---|---|---|---|
| Motor model *1 | IP65 | | MHME102GC□ | MHME102SC□ |
| | IP67 | | MHME102G1□ | MHME102S1□ |
| Applicable driver *2 | Model No. | A5Ⅱ, A5 series | MDD◇T3530 | |
| | | A5ⅡE, A5E series | MDD◇T3530E | – |
| | Frame symbol | | D-frame | |
| Power supply capacity (kVA) | | | 1.8 | |
| Rated output (W) | | | 1000 | |
| Rated torque (N·m) | | | 4.77 | |
| Momentary Max. peak torque (N·m) | | | 14.3 | |
| Rated current (A(rms)) | | | 5.7 | |
| Max. current (A(o-p)) | | | 24 | |
| Regenerative brake frequency (times/min) Note)1 | Without option | | 83 | |
| | DV0P4284 | | No limit Note)2 | |
| Rated rotational speed (r/min) | | | 2000 | |
| Max. rotational speed (r/min) | | | 3000 | |
| Moment of inertia of rotor ($\times10^{-4}$ kg·m$^2$) | Without brake | | 24.7 | |
| | With brake | | 26.0 | |
| Recommended moment of inertia ratio of the load and the rotor Note)3 | | | 5 times or less | |
| Rotary encoder specifications Note)5 | | | 20-bit Incremental | 17-bit Absolute |
| | Resolution per single turn | | 1048576 | 131072 |

• **Brake specifications** (For details, refer to P.183)
(This brake will be released when it is energized. Do not use this for braking the motor in motion.)

| | |
|---|---|
| Static friction torque (N·m) | 4.9 or more |
| Engaging time (ms) | 80 or less |
| Releasing time (ms) Note)4 | 70 or less |
| Exciting current (DC) (A) | 0.59±10 % |
| Releasing voltage (DC) (V) | 2 or more |
| Exciting voltage (DC) (V) | 24±2.4 |

• **Permissible load** (For details, refer to P.183)

| | | |
|---|---|---|
| During assembly | Radial load P-direction (N) | 980 |
| | Thrust load A-direction (N) | 588 |
| | Thrust load B-direction (N) | 686 |
| During operation | Radial load P-direction (N) | 490 |
| | Thrust load A, B-direction (N) | 196 |

• For details of Note 1 to Note 5, refer to P.182, P.183.
• Dimensions of Driver, refer to P.43.
*1 Motor specifications: □
*2 The product that the end of driver model designation has "E" is "Position control type". Detail of model designation, refer to P.16.
*3 ◇ in number of applicable driver represents the series. For more information about the part number, please refer to P.16.

## Torque characteristics (at AC200 V of power voltage <Dotted line represents the torque at 10 % less supply voltage.>)

With oil seal

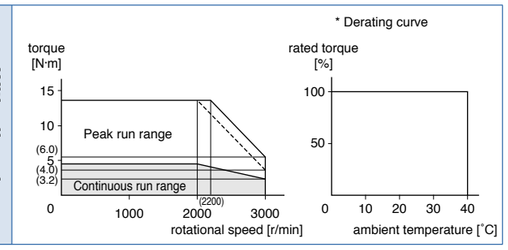


## Dimensions

(For IP67 motor, refer to P.140.)

Mass: Without brake/ 6.7 kg
With brake/ 8.1 kg

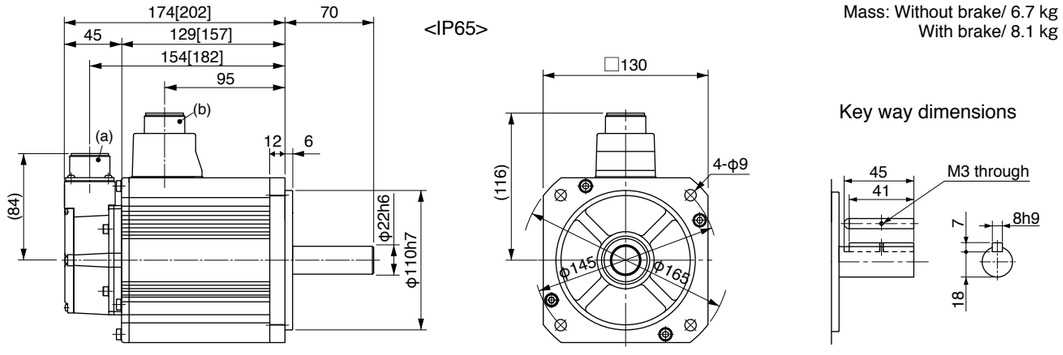


(a) Encoder connector
(b) Motor/Brake connector

* Figures in [ ] represent the dimensions with brake.

[Unit: mm]

**<Cautions>** Reduce the moment of inertia ratio if high speed response operation is required.
Dimensions are subject to change without notice. Contact us or a dealer for the latest information.
Read the Instruction Manual carefully and understand all precautions and remarks before using the products.





# 200 V MHME 1.5 kW [High inertia, Middle capacity]

## Specifications

| | | | AC200 V | |
|---|---|---|---|---|
| Motor model *1 | IP65 | | MHME152GC□ | MHME152SC□ |
| | IP67 | | MHME152G1□ | MHME152S1□ |
| Applicable driver *2 | Model No. | A5Ⅱ, A5 series | MDD◇T5540 | |
| | | A5ⅡE, A5E series | MDD◇T5540E | – |
| | Frame symbol | | D-frame | |
| Power supply capacity (kVA) | | | 2.3 | |
| Rated output (W) | | | 1500 | |
| Rated torque (N·m) | | | 7.16 | |
| Momentary Max. peak torque (N·m) | | | 21.5 | |
| Rated current (A(rms)) | | | 9.4 | |
| Max. current (A(o-p)) | | | 40 | |
| Regenerative brake frequency (times/min) Note)1 | Without option | | 22 | |
| | DV0P4284 | | 130 | |
| Rated rotational speed (r/min) | | | 2000 | |
| Max. rotational speed (r/min) | | | 3000 | |
| Moment of inertia of rotor ($\times10^{-4}$ kg·m$^2$) | Without brake | | 37.1 | |
| | With brake | | 38.4 | |
| Recommended moment of inertia ratio of the load and the rotor Note)3 | | | 5 times or less | |
| Rotary encoder specifications Note)5 | | | 20-bit Incremental | 17-bit Absolute |
| | Resolution per single turn | | 1048576 | 131072 |

• **Brake specifications** (For details, refer to P.183)
(This brake will be released when it is energized. Do not use this for braking the motor in motion.)

| | |
|---|---|
| Static friction torque (N·m) | 13.7 or more |
| Engaging time (ms) | 100 or less |
| Releasing time (ms) Note)4 | 50 or less |
| Exciting current (DC) (A) | 0.79±10 % |
| Releasing voltage (DC) (V) | 2 or more |
| Exciting voltage (DC) (V) | 24±2.4 |

• **Permissible load** (For details, refer to P.183)

| | | |
|---|---|---|
| During assembly | Radial load P-direction (N) | 980 |
| | Thrust load A-direction (N) | 588 |
| | Thrust load B-direction (N) | 686 |
| During operation | Radial load P-direction (N) | 490 |
| | Thrust load A, B-direction (N) | 196 |

• For details of Note 1 to Note 5, refer to P.182, P.183.
• Dimensions of Driver, refer to P.43.
*1 Motor specifications: □
*2 The product that the end of driver model designation has "E" is "Position control type". Detail of model designation, refer to P.16.
*3 ◇ in number of applicable driver represents the series. For more information about the part number, please refer to P.16.

## Torque characteristics (at AC200 V of power voltage <Dotted line represents the torque at 10 % less supply voltage.>)

With oil seal

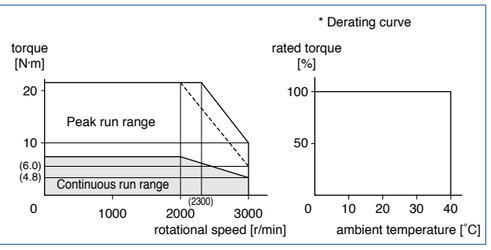


## Dimensions

(For IP67 motor, refer to P.140.)

Mass: Without brake/ 8.6 kg
With brake/ 10.1 kg

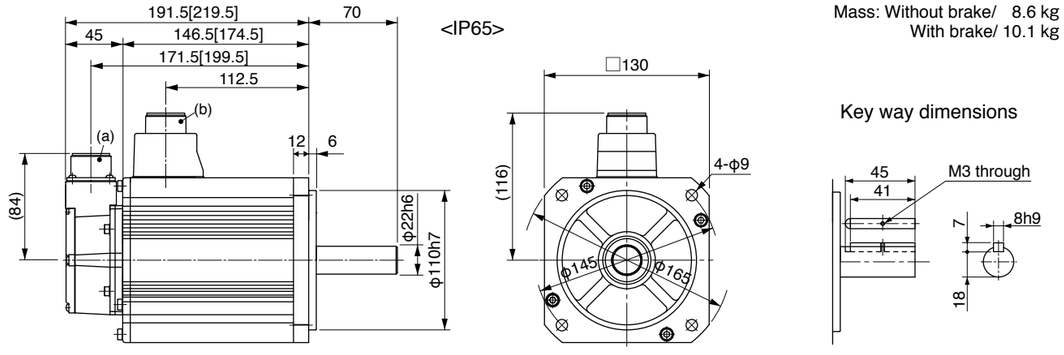


(a) Encoder connector
(b) Motor/Brake connector

* Figures in [ ] represent the dimensions with brake.

[Unit: mm]

**<Cautions>** Reduce the moment of inertia ratio if high speed response operation is required.
Dimensions are subject to change without notice. Contact us or a dealer for the latest information.
Read the Instruction Manual carefully and understand all precautions and remarks before using the products.

# 200 V MHME 2.0 kW [High inertia, Middle capacity]

## Specifications

| | | | AC200 V | |
|---|---|---|---|---|
| Motor model *1 | IP65 | | MHME202GC□ | MHME202SC□ |
| | IP67 | | MHME202G1□ | MHME202S1□ |
| Applicable driver *2 | Model No. | A5Ⅱ, A5 series | MED◇T7364 | |
| | | A5ⅡE, A5E series | MED◇T7364E | – |
| | Frame symbol | | E-frame | |
| Power supply capacity (kVA) | | | 3.3 | |
| Rated output (W) | | | 2000 | |
| Rated torque (N·m) | | | 9.55 | |
| Momentary Max. peak torque (N·m) | | | 28.6 | |
| Rated current (A(rms)) | | | 11.1 | |
| Max. current (A(o-p)) | | | 47 | |
| Regenerative brake frequency (times/min) Note)1 | Without option | | 45 | |
| | DV0P4285 | | 142 | |
| Rated rotational speed (r/min) | | | 2000 | |
| Max. rotational speed (r/min) | | | 3000 | |
| Moment of inertia of rotor ($\times 10^{-4}$ kg·m$^2$) | Without brake | | 57.8 | |
| | With brake | | 59.6 | |
| Recommended moment of inertia ratio of the load and the rotor Note)3 | | | 5 times or less | |
| Rotary encoder specifications Note)5 | | | 20-bit Incremental | 17-bit Absolute |
| | Resolution per single turn | | 1048576 | 131072 |

• **Brake specifications** (For details, refer to P.183)
(This brake will be released when it is energized.
Do not use this for braking the motor in motion.)

| | |
|---|---|
| Static friction torque (N·m) | 24.5 or more |
| Engaging time (ms) | 80 or less |
| Releasing time (ms) Note)4 | 25 or less |
| Exciting current (DC) (A) | 1.3±10 % |
| Releasing voltage (DC) (V) | 2 or more |
| Exciting voltage (DC) (V) | 24±2.4 |

• **Permissible load** (For details, refer to P.183)

| | | |
|---|---|---|
| During assembly | Radial load P-direction (N) | 1666 |
| | Thrust load A-direction (N) | 784 |
| | Thrust load B-direction (N) | 980 |
| During operation | Radial load P-direction (N) | 784 |
| | Thrust load A, B-direction (N) | 343 |

• For details of Note 1 to Note 5, refer to P.182, P.183.
• Dimensions of Driver, refer to P.44.
*1 Motor specifications: □
*2 The product that the end of driver model designation has "E" is "Position control type". Detail of model designation, refer to P.16.
*3 ◇ in number of applicable driver represents the series. For more information about the part number, please refer to P.16.

## Torque characteristics (at AC200 V of power voltage <Dotted line represents the torque at 10 % less supply voltage.>)

With oil seal

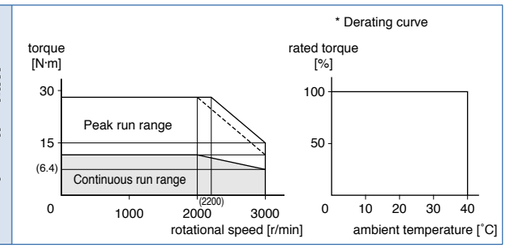


## Dimensions

(For IP67 motor, refer to P.140.)

Mass: Without brake/ 12.2 kg
With brake/ 15.5 kg

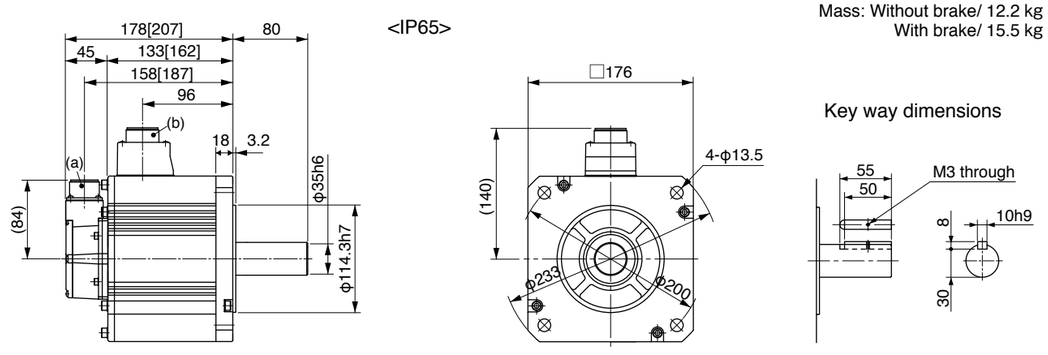


(a) Encoder connector
(b) Motor/Brake connector

* Figures in [ ] represent the dimensions with brake.

[Unit: mm]

**<Cautions>** Reduce the moment of inertia ratio if high speed response operation is required.
Dimensions are subject to change without notice. Contact us or a dealer for the latest information.
Read the Instruction Manual carefully and understand all precautions and remarks before using the products.





# 200 V MHME 3.0 kW [High inertia, Middle capacity]

## Specifications

| | | | AC200 V | |
|---|---|---|---|---|
| Motor model *1 | IP65 | | MHME302GC□ | MHME302SC□ |
| | IP67 | | MHME302G1□ | MHME302S1□ |
| Applicable driver *2 | Model No. | A5Ⅱ, A5 series | MFD◇TA390 | |
| | | A5ⅡE, A5E series | MFD◇TA390E | – |
| | Frame symbol | | F-frame | |
| Power supply capacity (kVA) | | | 4.5 | |
| Rated output (W) | | | 3000 | |
| Rated torque (N·m) | | | 14.3 | |
| Momentary Max. peak torque (N·m) | | | 43.0 | |
| Rated current (A(rms)) | | | 16.0 | |
| Max. current (A(o-p)) | | | 68 | |
| Regenerative brake frequency (times/min) Note)1 | Without option | | 19 | |
| | DV0P4285×2 | | 142 | |
| Rated rotational speed (r/min) | | | 2000 | |
| Max. rotational speed (r/min) | | | 3000 | |
| Moment of inertia of rotor ($\times 10^{-4}$ kg·m$^2$) | Without brake | | 90.5 | |
| | With brake | | 92.1 | |
| Recommended moment of inertia ratio of the load and the rotor Note)3 | | | 5 times or less | |
| Rotary encoder specifications Note)5 | | | 20-bit Incremental | 17-bit Absolute |
| | Resolution per single turn | | 1048576 | 131072 |

• **Brake specifications** (For details, refer to P.183)
(This brake will be released when it is energized.
Do not use this for braking the motor in motion.)

| | |
|---|---|
| Static friction torque (N·m) | 24.5 or more |
| Engaging time (ms) | 80 or less |
| Releasing time (ms) Note)4 | 25 or less |
| Exciting current (DC) (A) | 1.3±10 % |
| Releasing voltage (DC) (V) | 2 or more |
| Exciting voltage (DC) (V) | 24±2.4 |

• **Permissible load** (For details, refer to P.183)

| | | |
|---|---|---|
| During assembly | Radial load P-direction (N) | 1666 |
| | Thrust load A-direction (N) | 784 |
| | Thrust load B-direction (N) | 980 |
| During operation | Radial load P-direction (N) | 784 |
| | Thrust load A, B-direction (N) | 343 |

• For details of Note 1 to Note 5, refer to P.182, P.183.
• Dimensions of Driver, refer to P.45.
*1 Motor specifications: □
*2 The product that the end of driver model designation has "E" is "Position control type". Detail of model designation, refer to P.16.
*3 ◇ in number of applicable driver represents the series. For more information about the part number, please refer to P.16.

## Torque characteristics (at AC200 V of power voltage <Dotted line represents the torque at 10 % less supply voltage.>)

With oil seal




## Dimensions

(For IP67 motor, refer to P.140.)

Mass: Without brake/ 16.0 kg
With brake/ 19.2 kg




(a) Encoder connector
(b) Motor/Brake connector

* Figures in [ ] represent the dimensions with brake.

[Unit: mm]

**<Cautions>** Reduce the moment of inertia ratio if high speed response operation is required.
Dimensions are subject to change without notice. Contact us or a dealer for the latest information.
Read the Instruction Manual carefully and understand all precautions and remarks before using the products.

# 200 V MHME 4.0 kW [High inertia, Middle capacity]

## Specifications

| | | | AC200 V | |
|---|---|---|---|---|
| Motor model *1 | IP65 | | MHME402GC□ | MHME402SC□ |
| | IP67 | | MHME402G1□ | MHME402S1□ |
| Applicable driver *2 | Model No. | A5Ⅱ, A5 series | MFD◇TB3A2 | |
| | | A5ⅡE, A5E series | MFD◇TB3A2E | – |
| | Frame symbol | | F-frame | |
| Power supply capacity (kVA) | | | 6.0 | |
| Rated output (W) | | | 4000 | |
| Rated torque (N·m) | | | 19.1 | |
| Momentary Max. peak torque (N·m) | | | 57.3 | |
| Rated current (A(rms)) | | | 21.0 | |
| Max. current (A(o-p)) | | | 89 | |
| Regenerative brake frequency (times/min) Note)1 | Without option | | 17 | |
| | DV0P4285×2 | | 125 | |
| Rated rotational speed (r/min) | | | 2000 | |
| Max. rotational speed (r/min) | | | 3000 | |
| Moment of inertia of rotor ($\times10^{-4}$ kg·m$^2$) | Without brake | | 112 | |
| | With brake | | 114 | |
| Recommended moment of inertia ratio of the load and the rotor Note)3 | | | 5 times or less | |
| Rotary encoder specifications Note)5 | | | 20-bit Incremental | 17-bit Absolute |
| | Resolution per single turn | | 1048576 | 131072 |

• **Brake specifications** (For details, refer to P.183)
(This brake will be released when it is energized.
Do not use this for braking the motor in motion.)

| | |
|---|---|
| Static friction torque (N·m) | 24.5 or more |
| Engaging time (ms) | 80 or less |
| Releasing time (ms) Note)4 | 25 or less |
| Exciting current (DC) (A) | 1.3±10 % |
| Releasing voltage (DC) (V) | 2 or more |
| Exciting voltage (DC) (V) | 24±2.4 |

• **Permissible load** (For details, refer to P.183)

| | | |
|---|---|---|
| During assembly | Radial load P-direction (N) | 1666 |
| | Thrust load A-direction (N) | 784 |
| | Thrust load B-direction (N) | 980 |
| During operation | Radial load P-direction (N) | 784 |
| | Thrust load A, B-direction (N) | 343 |

• For details of Note 1 to Note 5, refer to P.182, P.183.
• Dimensions of Driver, refer to P.45.
*1 Motor specifications: □
*2 The product that the end of driver model designation has "E" is "Position control type". Detail of model designation, refer to P.16.
*3 ◇ in number of applicable driver represents the series. For more information about the part number, please refer to P.16.

## Torque characteristics (at AC200 V of power voltage <Dotted line represents the torque at 10 % less supply voltage.>)

With oil seal

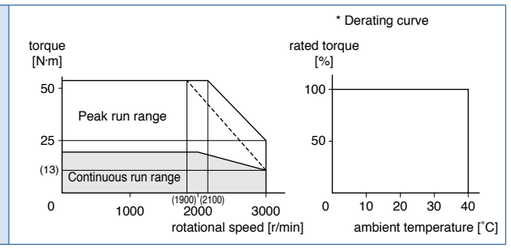


## Dimensions

(For IP67 motor, refer to P.140.)

Mass: Without brake/ 18.6 kg
With brake/ 21.8 kg

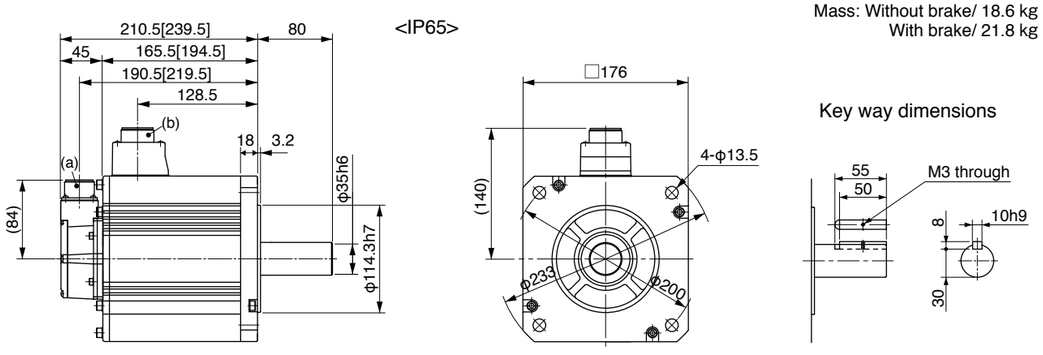


(a) Encoder connector
(b) Motor/Brake connector

* Figures in [ ] represent the dimensions with brake.

[Unit: mm]

**<Cautions>** Reduce the moment of inertia ratio if high speed response operation is required.
Dimensions are subject to change without notice. Contact us or a dealer for the latest information.
Read the Instruction Manual carefully and understand all precautions and remarks before using the products.





# 200 V MHME 5.0 kW [High inertia, Middle capacity]

## Specifications

| | | | AC200 V | |
|---|---|---|---|---|
| Motor model *1 | IP65 | | MHME502GC□ | MHME502SC□ |
| | IP67 | | MHME502G1□ | MHME502S1□ |
| Applicable driver *2 | Model No. | A5Ⅱ, A5 series | MFD◇TB3A2 | |
| | | A5ⅡE, A5E series | MFD◇TB3A2E | – |
| | Frame symbol | | F-frame | |
| Power supply capacity (kVA) | | | 7.5 | |
| Rated output (W) | | | 5000 | |
| Rated torque (N·m) | | | 23.9 | |
| Momentary Max. peak torque (N·m) | | | 71.6 | |
| Rated current (A(rms)) | | | 25.9 | |
| Max. current (A(o-p)) | | | 110 | |
| Regenerative brake frequency (times/min) Note)1 | Without option | | 10 | |
| | DV0P4285×2 | | 76 | |
| Rated rotational speed (r/min) | | | 2000 | |
| Max. rotational speed (r/min) | | | 3000 | |
| Moment of inertia of rotor ($\times10^{-4}$ kg·m$^2$) | Without brake | | 162 | |
| | With brake | | 164 | |
| Recommended moment of inertia ratio of the load and the rotor Note)3 | | | 5 times or less | |
| Rotary encoder specifications Note)5 | | | 20-bit Incremental | 17-bit Absolute |
| | Resolution per single turn | | 1048576 | 131072 |

• **Brake specifications** (For details, refer to P.183)
(This brake will be released when it is energized.
Do not use this for braking the motor in motion.)

| | |
|---|---|
| Static friction torque (N·m) | 24.5 or more |
| Engaging time (ms) | 80 or less |
| Releasing time (ms) Note)4 | 25 or less |
| Exciting current (DC) (A) | 1.3±10 % |
| Releasing voltage (DC) (V) | 2 or more |
| Exciting voltage (DC) (V) | 24±2.4 |

• **Permissible load** (For details, refer to P.183)

| | | |
|---|---|---|
| During assembly | Radial load P-direction (N) | 1666 |
| | Thrust load A-direction (N) | 784 |
| | Thrust load B-direction (N) | 980 |
| During operation | Radial load P-direction (N) | 784 |
| | Thrust load A, B-direction (N) | 343 |

• For details of Note 1 to Note 5, refer to P.182, P.183.
• Dimensions of Driver, refer to P.45.
*1 Motor specifications: □
*2 The product that the end of driver model designation has "E" is "Position control type". Detail of model designation, refer to P.16.
*3 ◇ in number of applicable driver represents the series. For more information about the part number, please refer to P.16.

## Torque characteristics (at AC200 V of power voltage <Dotted line represents the torque at 10 % less supply voltage.>)

With oil seal

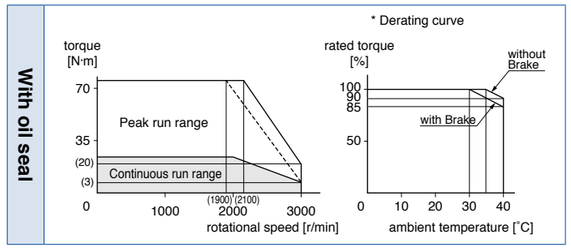


## Dimensions

(For IP67 motor, refer to P.140.)

Mass: Without brake/ 23.0 kg
With brake/ 26.2 kg

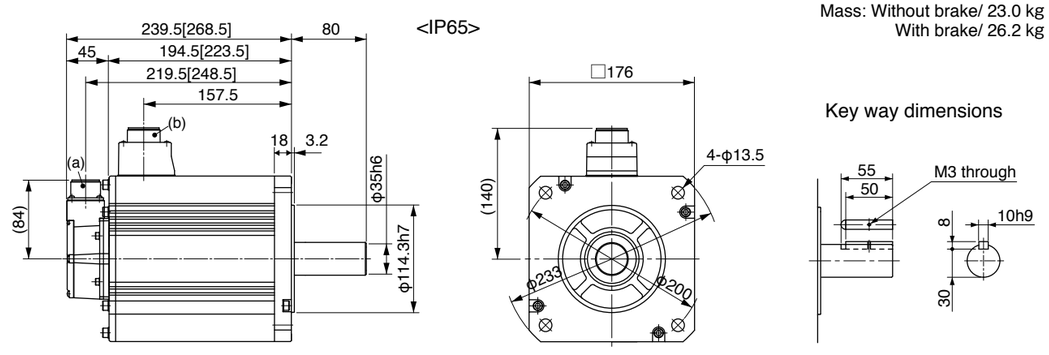


(a) Encoder connector
(b) Motor/Brake connector

* Figures in [ ] represent the dimensions with brake.

[Unit: mm]

**<Cautions>** Reduce the moment of inertia ratio if high speed response operation is required.
Dimensions are subject to change without notice. Contact us or a dealer for the latest information.
Read the Instruction Manual carefully and understand all precautions and remarks before using the products.

# 200 V MHME 7.5 kW [High inertia, Middle capacity]

## Specifications

| | | | AC200 V | |
|---|---|---|---|---|
| Motor model *1 | IP65 | | – | – |
| | IP67 | | MHME752G1□ | MHME752S1□ |
| Applicable driver *2 | Model No. | A5Ⅱ, A5 series | MGD◇TC3B4 | |
| | | A5ⅡE, A5E series | — | – |
| | Frame symbol | | G-frame | |
| Power supply capacity (kVA) | | | 11 | |
| Rated output (W) | | | 7500 | |
| Rated torque (N·m) | | | 47.8 | |
| Momentary Max. peak torque (N·m) | | | 119 | |
| Rated current (A(rms)) | | | 44.0 | |
| Max. current (A(o-p)) | | | 165 | |
| Regenerative brake frequency (times/min) Note)1 | Without option | | No limit Note)2 | |
| | DV0P4285×4 | | No limit Note)2 | |
| Rated rotational speed (r/min) | | | 1500 | |
| Max. rotational speed (r/min) | | | 3000 | |
| Moment of inertia of rotor ($\times 10^{-4}$ kg·m$^2$) | Without brake | | 273 | |
| | With brake | | 279 | |
| Recommended moment of inertia ratio of the load and the rotor Note)3 | | | 5 times or less | |
| Rotary encoder specifications Note)5 | | | 20-bit Incremental | 17-bit Absolute |
| | Resolution per single turn | | 1048576 | 131072 |

• **Brake specifications** (For details, refer to P.183)
(This brake will be released when it is energized. Do not use this for braking the motor in motion.)

| | |
|---|---|
| Static friction torque (N·m) | 58.8 or more |
| Engaging time (ms) | 150 or less |
| Releasing time (ms) Note)4 | 50 or less |
| Exciting current (DC) (A) | 1.41±10 % |
| Releasing voltage (DC) (V) | 2 or more |
| Exciting voltage (DC) (V) | 24±2.4 |

• **Permissible load** (For details, refer to P.183)

| | | |
|---|---|---|
| During assembly | Radial load P-direction (N) | 2058 |
| | Thrust load A-direction (N) | 980 |
| | Thrust load B-direction (N) | 1176 |
| During operation | Radial load P-direction (N) | 1176 |
| | Thrust load A, B-direction (N) | 490 |

• For details of Note 1 to Note 5, refer to P.182, P.183.
• Dimensions of Driver, refer to P.46.
*1 Motor specifications: □
*2 The product that the end of driver model designation has "E" is "Position control type". Detail of model designation, refer to P.16.
*3 ◇ in number of applicable driver represents the series. For more information about the part number, please refer to P.16.

## Torque characteristics (at AC200 V of power voltage <Dotted line represents the torque at 10 % less supply voltage.>)

With oil seal

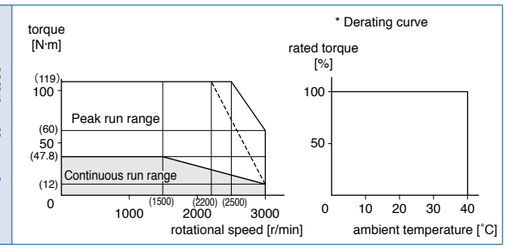


## Dimensions

Mass: Without brake/ 42.3 kg
With brake/ 46.2 kg

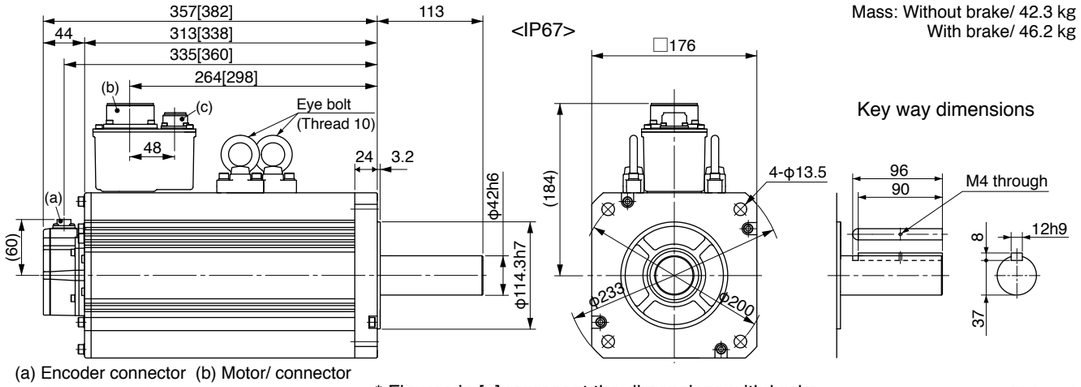


(a) Encoder connector (b) Motor/ connector
(c) Brake connector (only with brake)

* Figures in [ ] represent the dimensions with brake.

[Unit: mm]

**<Cautions>** Reduce the moment of inertia ratio if high speed response operation is required.
Dimensions are subject to change without notice. Contact us or a dealer for the latest information.
Read the Instruction Manual carefully and understand all precautions and remarks before using the products.





# 400 V MSME 750 W [Low inertia, Middle capacity]

## Specifications

| | | | AC400 V | |
|---|---|---|---|---|
| Motor model *1 | IP65 | | MSME084GC□ | MSME084SC□ |
| | IP67 | | MSME084G1□ | MSME084S1□ |
| Applicable driver *2 | Model No. | A5Ⅱ, A5 series | MDD◇T2412 | |
| | | A5ⅡE, A5E series | MDD◇T2412E | – |
| | Frame symbol | | D-frame | |
| Power supply capacity (kVA) | | | 1.6 | |
| Rated output (W) | | | 750 | |
| Rated torque (N·m) | | | 2.39 | |
| Momentary Max. peak torque (N·m) | | | 7.16 | |
| Rated current (A(rms)) | | | 2.4 | |
| Max. current (A(o-p)) | | | 10 | |
| Regenerative brake frequency (times/min) Note)1 | Without option | | No limit Note)2 | |
| | DV0PM20048 | | No limit Note)2 | |
| Rated rotational speed (r/min) | | | 3000 | |
| Max. rotational speed (r/min) | | | 5000 | |
| Moment of inertia of rotor ($\times 10^{-4}$ kg·m$^2$) | Without brake | | 1.61 | |
| | With brake | | 1.93 | |
| Recommended moment of inertia ratio of the load and the rotor Note)3 | | | 15 times or less | |
| Rotary encoder specifications Note)5 | | | 20-bit Incremental | 17-bit Absolute |
| | Resolution per single turn | | 1048576 | 131072 |

• **Brake specifications** (For details, refer to P.183)
(This brake will be released when it is energized. Do not use this for braking the motor in motion.)

| | |
|---|---|
| Static friction torque (N·m) | 2.5 or more |
| Engaging time (ms) | 50 or less |
| Releasing time (ms) Note)4 | 15 or less |
| Exciting current (DC) (A) | 0.70±10 % |
| Releasing voltage (DC) (V) | 2 or more |
| Exciting voltage (DC) (V) | 24±2.4 |

• **Permissible load** (For details, refer to P.183)

| | | |
|---|---|---|
| During assembly | Radial load P-direction (N) | 980 |
| | Thrust load A-direction (N) | 588 |
| | Thrust load B-direction (N) | 686 |
| During operation | Radial load P-direction (N) | 490 |
| | Thrust load A, B-direction (N) | 196 |

• For details of Note 1 to Note 5, refer to P.182, P.183.
• Dimensions of Driver, refer to P.44.
*1 Motor specifications: □
*2 The product that the end of driver model designation has "E" is "Position control type". Detail of model designation, refer to P.16.
*3 ◇ in number of applicable driver represents the series. For more information about the part number, please refer to P.16.

## Torque characteristics (at AC400 V of power voltage <Dotted line represents the torque at 10 % less supply voltage.>)

With oil seal

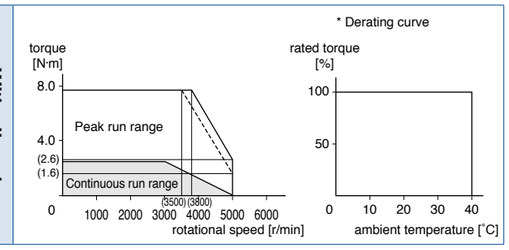


## Dimensions

(For IP67 motor, refer to P.137.)

Mass: Without brake/ 3.1 kg
With brake/ 4.1 kg

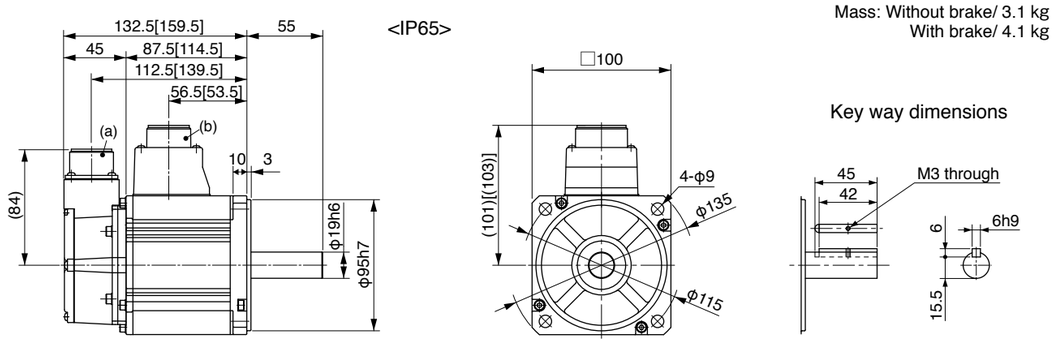


(a) Encoder connector
(b) Motor/Brake connector

* Figures in [ ] represent the dimensions with brake.

[Unit: mm]

**<Cautions>** Reduce the moment of inertia ratio if high speed response operation is required.
Dimensions are subject to change without notice. Contact us or a dealer for the latest information.
Read the Instruction Manual carefully and understand all precautions and remarks before using the products.

# 400 V MSME 1.0 kW [Low inertia, Middle capacity]

## Specifications

| | | | AC400 V | |
|---|---|---|---|---|
| Motor model *1 | IP65 | | MSME104GC□ | MSME104SC□ |
| | IP67 | | MSME104G1□ | MSME104S1□ |
| Applicable driver *2 | Model No. | A5Ⅱ, A5 series | MDD◇T3420 | |
| | | A5ⅡE, A5E series | MDD◇T3420E | – |
| | Frame symbol | | D-frame | |
| Power supply capacity (kVA) | | | 1.8 | |
| Rated output (W) | | | 1000 | |
| Rated torque (N·m) | | | 3.18 | |
| Momentary Max. peak torque (N·m) | | | 9.55 | |
| Rated current (A(rms)) | | | 3.3 | |
| Max. current (A(o-p)) | | | 14 | |
| Regenerative brake frequency (times/min) Note)1 | Without option | | No limit Note)2 | |
| | DV0PM20048 | | No limit Note)2 | |
| Rated rotational speed (r/min) | | | 3000 | |
| Max. rotational speed (r/min) | | | 5000 | |
| Moment of inertia of rotor ($\times 10^{-4}$ kg·m$^2$) | Without brake | | 2.03 | |
| | With brake | | 2.35 | |
| Recommended moment of inertia ratio of the load and the rotor Note)3 | | | 15 times or less | |
| Rotary encoder specifications Note)5 | | | 20-bit Incremental | 17-bit Absolute |
| | Resolution per single turn | | 1048576 | 131072 |

• **Brake specifications** (For details, refer to P.183)
(This brake will be released when it is energized.
Do not use this for braking the motor in motion.)

| | |
|---|---|
| Static friction torque (N·m) | 7.8 or more |
| Engaging time (ms) | 50 or less |
| Releasing time (ms) Note)4 | 15 or less |
| Exciting current (DC) (A) | 0.81±10 % |
| Releasing voltage (DC) (V) | 2 or more |
| Exciting voltage (DC) (V) | 24±2.4 |

• **Permissible load** (For details, refer to P.183)

| | | |
|---|---|---|
| During assembly | Radial load P-direction (N) | 980 |
| | Thrust load A-direction (N) | 588 |
| | Thrust load B-direction (N) | 686 |
| During operation | Radial load P-direction (N) | 490 |
| | Thrust load A, B-direction (N) | 196 |

• For details of Note 1 to Note 5, refer to P.182, P.183.
• Dimensions of Driver, refer to P.44.
*1 Motor specifications: □
*2 The product that the end of driver model designation has "E" is "Position control type". Detail of model designation, refer to P.16.
*3 ◇ in number of applicable driver represents the series. For more information about the part number, please refer to P.16.

## Torque characteristics (at AC400 V of power voltage <Dotted line represents the torque at 10 % less supply voltage.>)

With oil seal

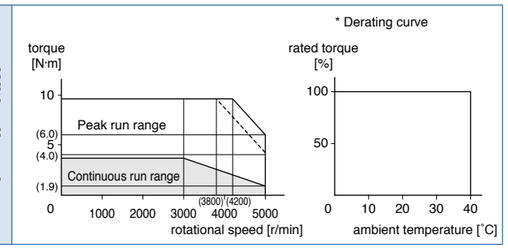


## Dimensions

(For IP67 motor, refer to P.137.)

Mass: Without brake/ 3.5 kg
With brake/ 4.5 kg

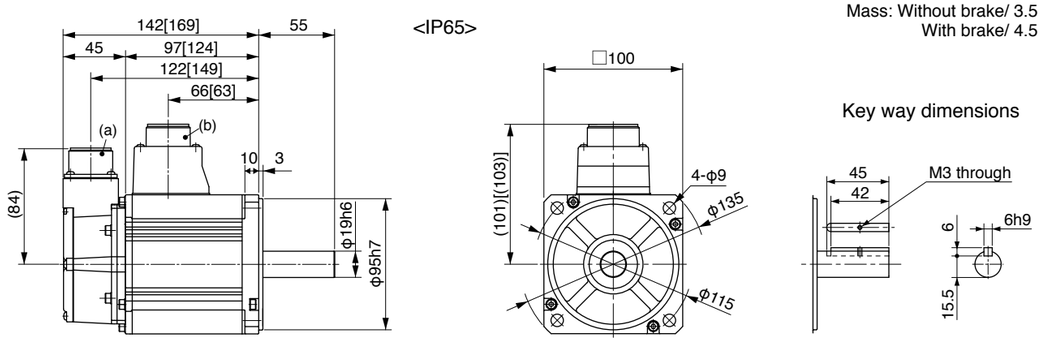


(a) Encoder connector
(b) Motor/Brake connector

* Figures in [ ] represent the dimensions with brake.

[Unit: mm]

**<Cautions>** Reduce the moment of inertia ratio if high speed response operation is required.
Dimensions are subject to change without notice. Contact us or a dealer for the latest information.
Read the Instruction Manual carefully and understand all precautions and remarks before using the products.





# 400 V MSME 1.5 kW [Low inertia, Middle capacity]

## Specifications

| | | | AC400 V | |
|---|---|---|---|---|
| Motor model *1 | IP65 | | MSME154GC□ | MSME154SC□ |
| | IP67 | | MSME154G1□ | MSME154S1□ |
| Applicable driver *2 | Model No. | A5Ⅱ, A5 series | MDD◇T3420 | |
| | | A5ⅡE, A5E series | MDD◇T3420E | – |
| | Frame symbol | | D-frame | |
| Power supply capacity (kVA) | | | 2.3 | |
| Rated output (W) | | | 1500 | |
| Rated torque (N·m) | | | 4.77 | |
| Momentary Max. peak torque (N·m) | | | 14.3 | |
| Rated current (A(rms)) | | | 4.2 | |
| Max. current (A(o-p)) | | | 18 | |
| Regenerative brake frequency (times/min) Note)1 | Without option | | No limit Note)2 | |
| | DV0PM20048 | | No limit Note)2 | |
| Rated rotational speed (r/min) | | | 3000 | |
| Max. rotational speed (r/min) | | | 5000 | |
| Moment of inertia of rotor ($\times 10^{-4}$ kg·m$^2$) | Without brake | | 2.84 | |
| | With brake | | 3.17 | |
| Recommended moment of inertia ratio of the load and the rotor Note)3 | | | 15 times or less | |
| Rotary encoder specifications Note)5 | | | 20-bit Incremental | 17-bit Absolute |
| | Resolution per single turn | | 1048576 | 131072 |

• **Brake specifications** (For details, refer to P.183)
(This brake will be released when it is energized.
Do not use this for braking the motor in motion.)

| | |
|---|---|
| Static friction torque (N·m) | 7.8 or more |
| Engaging time (ms) | 50 or less |
| Releasing time (ms) Note)4 | 15 or less |
| Exciting current (DC) (A) | 0.81±10 % |
| Releasing voltage (DC) (V) | 2 or more |
| Exciting voltage (DC) (V) | 24±2.4 |

• **Permissible load** (For details, refer to P.183)

| | | |
|---|---|---|
| During assembly | Radial load P-direction (N) | 980 |
| | Thrust load A-direction (N) | 588 |
| | Thrust load B-direction (N) | 686 |
| During operation | Radial load P-direction (N) | 490 |
| | Thrust load A, B-direction (N) | 196 |

• For details of Note 1 to Note 5, refer to P.182, P.183.
• Dimensions of Driver, refer to P.44.
*1 Motor specifications: □
*2 The product that the end of driver model designation has "E" is "Position control type". Detail of model designation, refer to P.16.
*3 ◇ in number of applicable driver represents the series. For more information about the part number, please refer to P.16.

## Torque characteristics (at AC400 V of power voltage <Dotted line represents the torque at 10 % less supply voltage.>)

With oil seal

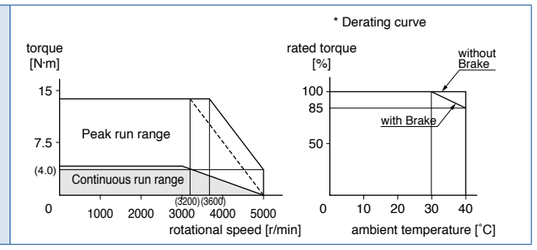


## Dimensions

(For IP67 motor, refer to P.137.)

Mass: Without brake/ 4.4 kg
With brake/ 5.4 kg

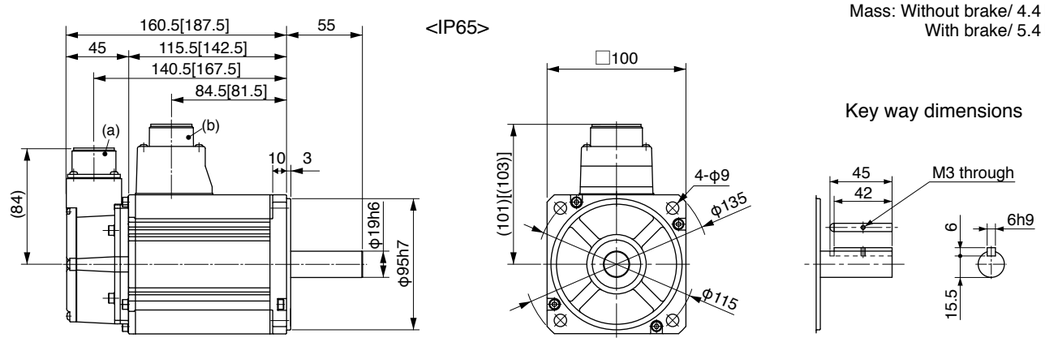


(a) Encoder connector
(b) Motor/Brake connector

* Figures in [ ] represent the dimensions with brake.

[Unit: mm]

**<Cautions>** Reduce the moment of inertia ratio if high speed response operation is required.
Dimensions are subject to change without notice. Contact us or a dealer for the latest information.
Read the Instruction Manual carefully and understand all precautions and remarks before using the products.

# 400 V MSME 2.0 kW [Low inertia, Middle capacity]

## Specifications

| | | | AC400 V | |
|---|---|---|---|---|
| Motor model *1 | IP65 | | MSME204GC□ | MSME204SC□ |
| | IP67 | | MSME204G1□ | MSME204S1□ |
| Applicable driver *2 | Model No. | A5Ⅱ, A5 series | MED◇T4430 | |
| | | A5ⅡE, A5E series | MED◇T4430E | – |
| | Frame symbol | | E-frame | |
| Power supply capacity (kVA) | | | 3.3 | |
| Rated output (W) | | | 2000 | |
| Rated torque (N·m) | | | 6.37 | |
| Momentary Max. peak torque (N·m) | | | 19.1 | |
| Rated current (A(rms)) | | | 5.7 | |
| Max. current (A(o-p)) | | | 24 | |
| Regenerative brake frequency (times/min) Note)1 | Without option | | No limit Note)2 | |
| | DV0PM20049 | | No limit Note)2 | |
| Rated rotational speed (r/min) | | | 3000 | |
| Max. rotational speed (r/min) | | | 5000 | |
| Moment of inertia of rotor ($\times 10^{-4}$ kg·m$^2$) | Without brake | | 3.68 | |
| | With brake | | 4.01 | |
| Recommended moment of inertia ratio of the load and the rotor Note)3 | | | 15 times or less | |
| Rotary encoder specifications Note)5 | | | 20-bit Incremental | 17-bit Absolute |
| | Resolution per single turn | | 1048576 | 131072 |

• **Brake specifications** (For details, refer to P.183)
(This brake will be released when it is energized.
Do not use this for braking the motor in motion.)

| | |
|---|---|
| Static friction torque (N·m) | 7.8 or more |
| Engaging time (ms) | 50 or less |
| Releasing time (ms) Note)4 | 15 or less |
| Exciting current (DC) (A) | 0.81±10 % |
| Releasing voltage (DC) (V) | 2 or more |
| Exciting voltage (DC) (V) | 24±2.4 |

• **Permissible load** (For details, refer to P.183)

| | | |
|---|---|---|
| During assembly | Radial load P-direction (N) | 980 |
| | Thrust load A-direction (N) | 588 |
| | Thrust load B-direction (N) | 686 |
| During operation | Radial load P-direction (N) | 490 |
| | Thrust load A, B-direction (N) | 196 |

• For details of Note 1 to Note 5, refer to P.182, P.183.
• Dimensions of Driver, refer to P.45.
*1 Motor specifications: □
*2 The product that the end of driver model designation has "E" is "Position control type". Detail of model designation, refer to P.16.
*3 ◇ in number of applicable driver represents the series. For more information about the part number, please refer to P.16.

## Torque characteristics (at AC400 V of power voltage <Dotted line represents the torque at 10 % less supply voltage.>)

With oil seal

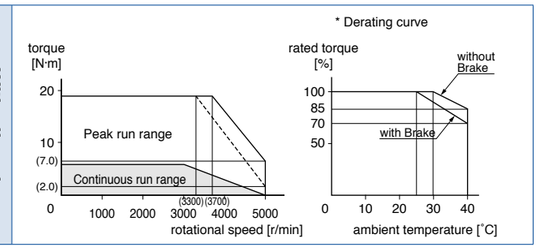


## Dimensions

(For IP67 motor, refer to P.137.)

Mass: Without brake/ 5.3 kg
With brake/ 6.3 kg

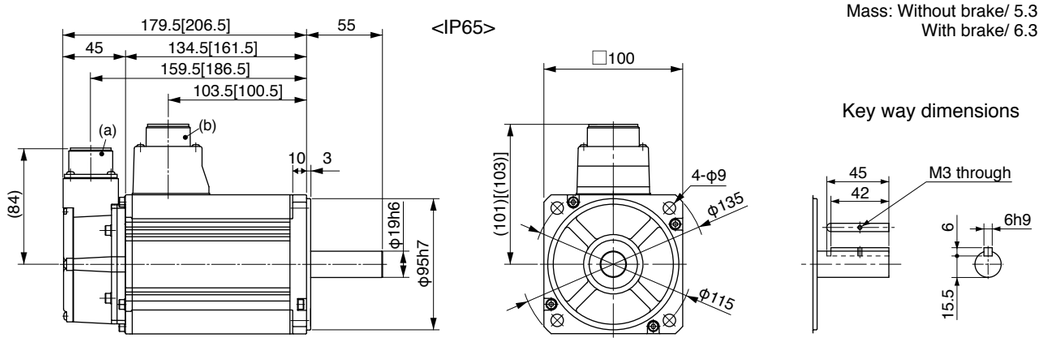


(a) Encoder connector
(b) Motor/Brake connector

* Figures in [ ] represent the dimensions with brake.

[Unit: mm]

**<Cautions>** Reduce the moment of inertia ratio if high speed response operation is required.
Dimensions are subject to change without notice. Contact us or a dealer for the latest information.
Read the Instruction Manual carefully and understand all precautions and remarks before using the products.





# 400 V MSME 3.0 kW [Low inertia, Middle capacity]

## Specifications

| | | | AC400 V | |
|---|---|---|---|---|
| Motor model *1 | IP65 | | MSME304GC□ | MSME304SC□ |
| | IP67 | | MSME304G1□ | MSME304S1□ |
| Applicable driver *2 | Model No. | A5Ⅱ, A5 series | MFD◇T5440 | |
| | | A5ⅡE, A5E series | MFD◇T5440E | – |
| | Frame symbol | | F-frame | |
| Power supply capacity (kVA) | | | 4.5 | |
| Rated output (W) | | | 3000 | |
| Rated torque (N·m) | | | 9.55 | |
| Momentary Max. peak torque (N·m) | | | 28.6 | |
| Rated current (A(rms)) | | | 9.2 | |
| Max. current (A(o-p)) | | | 39 | |
| Regenerative brake frequency (times/min) Note)1 | Without option | | No limit Note)2 | |
| | DV0PM20049×2 | | No limit Note)2 | |
| Rated rotational speed (r/min) | | | 3000 | |
| Max. rotational speed (r/min) | | | 5000 | |
| Moment of inertia of rotor ($\times 10^{-4}$ kg·m$^2$) | Without brake | | 6.50 | |
| | With brake | | 6.85 | |
| Recommended moment of inertia ratio of the load and the rotor Note)3 | | | 15 times or less | |
| Rotary encoder specifications Note)5 | | | 20-bit Incremental | 17-bit Absolute |
| | Resolution per single turn | | 1048576 | 131072 |

• **Brake specifications** (For details, refer to P.183)
(This brake will be released when it is energized.
Do not use this for braking the motor in motion.)

| | |
|---|---|
| Static friction torque (N·m) | 11.8 or more |
| Engaging time (ms) | 80 or less |
| Releasing time (ms) Note)4 | 15 or less |
| Exciting current (DC) (A) | 0.81±10 % |
| Releasing voltage (DC) (V) | 2 or more |
| Exciting voltage (DC) (V) | 24±2.4 |

• **Permissible load** (For details, refer to P.183)

| | | |
|---|---|---|
| During assembly | Radial load P-direction (N) | 980 |
| | Thrust load A-direction (N) | 588 |
| | Thrust load B-direction (N) | 686 |
| During operation | Radial load P-direction (N) | 490 |
| | Thrust load A, B-direction (N) | 196 |

• For details of Note 1 to Note 5, refer to P.182, P.183.
• Dimensions of Driver, refer to P.45.
*1 Motor specifications: □
*2 The product that the end of driver model designation has "E" is "Position control type". Detail of model designation, refer to P.16.
*3 ◇ in number of applicable driver represents the series. For more information about the part number, please refer to P.16.

## Torque characteristics (at AC400 V of power voltage <Dotted line represents the torque at 10 % less supply voltage.>)

With oil seal

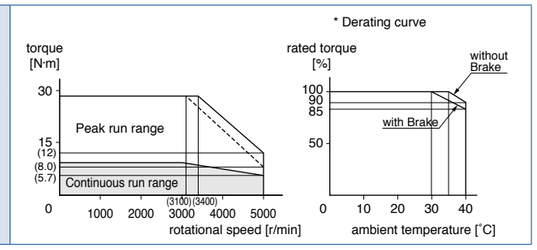


## Dimensions

(For IP67 motor, refer to P.137.)

Mass: Without brake/ 8.3 kg
With brake/ 9.4 kg

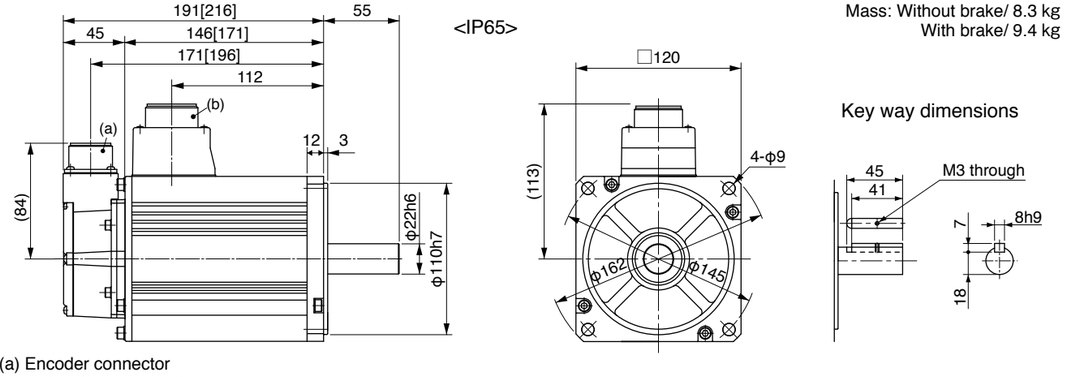


(a) Encoder connector
(b) Motor/Brake connector

* Figures in [ ] represent the dimensions with brake.

[Unit: mm]

**<Cautions>** Reduce the moment of inertia ratio if high speed response operation is required.
Dimensions are subject to change without notice. Contact us or a dealer for the latest information.
Read the Instruction Manual carefully and understand all precautions and remarks before using the products.

# 400 V MSME 4.0 kW [Low inertia, Middle capacity]

## Specifications

| | | | AC400 V | |
|---|---|---|---|---|
| Motor model *1 | IP65 | | MSME404GC□ | MSME404SC□ |
| | IP67 | | MSME404G1□ | MSME404S1□ |
| Applicable driver *2 | Model No. | A5Ⅱ, A5 series | MFD◇TA464 | |
| | | A5ⅡE, A5E series | MFD◇TA464E | – |
| | Frame symbol | | F-frame | |
| Power supply capacity (kVA) | | | 6.8 | |
| Rated output (W) | | | 4000 | |
| Rated torque (N·m) | | | 12.7 | |
| Momentary Max. peak torque (N·m) | | | 38.2 | |
| Rated current (A(rms)) | | | 9.9 | |
| Max. current (A(o-p)) | | | 42 | |
| Regenerative brake frequency (times/min) Note)1 | Without option | | No limit Note)2 | |
| | DV0PM20049×2 | | No limit Note)2 | |
| Rated rotational speed (r/min) | | | 3000 | |
| Max. rotational speed (r/min) | | | 4500 | |
| Moment of inertia of rotor ($\times10^{-4}$ kg·m$^2$) | Without brake | | 12.9 | |
| | With brake | | 14.2 | |
| Recommended moment of inertia ratio of the load and the rotor Note)3 | | | 15 times or less | |
| Rotary encoder specifications Note)5 | | | 20-bit Incremental | 17-bit Absolute |
| | Resolution per single turn | | 1048576 | 131072 |

• **Brake specifications** (For details, refer to P.183)
(This brake will be released when it is energized.
Do not use this for braking the motor in motion.)

| | |
|---|---|
| Static friction torque (N·m) | 16.2 or more |
| Engaging time (ms) | 110 or less |
| Releasing time (ms) Note)4 | 50 or less |
| Exciting current (DC) (A) | 0.90±10 % |
| Releasing voltage (DC) (V) | 2 or more |
| Exciting voltage (DC) (V) | 24±2.4 |

• **Permissible load** (For details, refer to P.183)

| | | |
|---|---|---|
| During assembly | Radial load P-direction (N) | 980 |
| | Thrust load A-direction (N) | 588 |
| | Thrust load B-direction (N) | 686 |
| During operation | Radial load P-direction (N) | 784 |
| | Thrust load A, B-direction (N) | 343 |

• For details of Note 1 to Note 5, refer to P.182, P.183.
• Dimensions of Driver, refer to P.45.
*1 Motor specifications: □
*2 The product that the end of driver model designation has "E" is "Position control type". Detail of model designation, refer to P.16.
*3 ◇ in number of applicable driver represents the series. For more information about the part number, please refer to P.16.

## Torque characteristics (at AC400 V of power voltage <Dotted line represents the torque at 10 % less supply voltage.>)

With oil seal

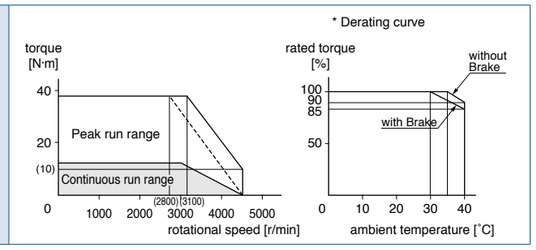


## Dimensions

(For IP67 motor, refer to P.137.)

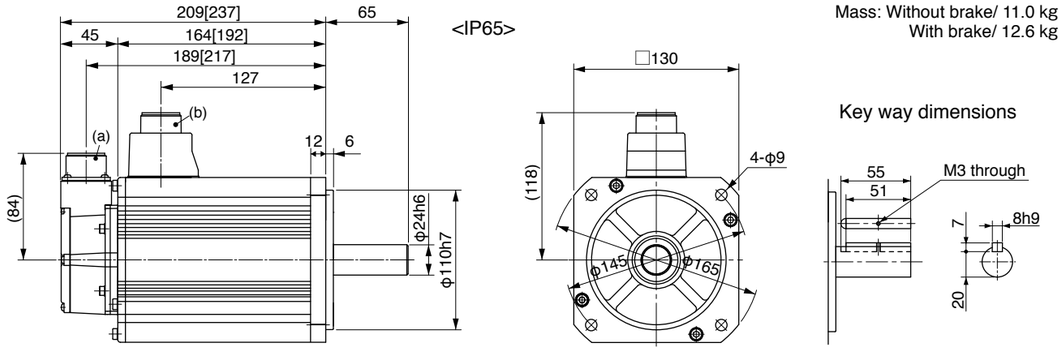


Mass: Without brake/ 11.0 kg
With brake/ 12.6 kg

(a) Encoder connector
(b) Motor/Brake connector

* Figures in [ ] represent the dimensions with brake.

[Unit: mm]

**<Cautions>** Reduce the moment of inertia ratio if high speed response operation is required.
Dimensions are subject to change without notice. Contact us or a dealer for the latest information.
Read the Instruction Manual carefully and understand all precautions and remarks before using the products.





# 400 V MSME 5.0 kW [Low inertia, Middle capacity]

## Specifications

| | | | AC400 V | |
|---|---|---|---|---|
| Motor model *1 | IP65 | | MSME504GC□ | MSME504SC□ |
| | IP67 | | MSME504G1□ | MSME504S1□ |
| Applicable driver *2 | Model No. | A5Ⅱ, A5 series | MFD◇TA464 | |
| | | A5ⅡE, A5E series | MFD◇TA464E | – |
| | Frame symbol | | F-frame | |
| Power supply capacity (kVA) | | | 7.5 | |
| Rated output (W) | | | 5000 | |
| Rated torque (N·m) | | | 15.9 | |
| Momentary Max. peak torque (N·m) | | | 47.7 | |
| Rated current (A(rms)) | | | 12.0 | |
| Max. current (A(o-p)) | | | 51 | |
| Regenerative brake frequency (times/min) Note)1 | Without option | | 357 | |
| | DV0PM20049×2 | | No limit Note)2 | |
| Rated rotational speed (r/min) | | | 3000 | |
| Max. rotational speed (r/min) | | | 4500 | |
| Moment of inertia of rotor ($\times10^{-4}$ kg·m$^2$) | Without brake | | 17.4 | |
| | With brake | | 18.6 | |
| Recommended moment of inertia ratio of the load and the rotor Note)3 | | | 15 times or less | |
| Rotary encoder specifications Note)5 | | | 20-bit Incremental | 17-bit Absolute |
| | Resolution per single turn | | 1048576 | 131072 |

• **Brake specifications** (For details, refer to P.183)
(This brake will be released when it is energized.
Do not use this for braking the motor in motion.)

| | |
|---|---|
| Static friction torque (N·m) | 16.2 or more |
| Engaging time (ms) | 110 or less |
| Releasing time (ms) Note)4 | 50 or less |
| Exciting current (DC) (A) | 0.90±10 % |
| Releasing voltage (DC) (V) | 2 or more |
| Exciting voltage (DC) (V) | 24±2.4 |

• **Permissible load** (For details, refer to P.183)

| | | |
|---|---|---|
| During assembly | Radial load P-direction (N) | 980 |
| | Thrust load A-direction (N) | 588 |
| | Thrust load B-direction (N) | 686 |
| During operation | Radial load P-direction (N) | 784 |
| | Thrust load A, B-direction (N) | 343 |

• For details of Note 1 to Note 5, refer to P.182, P.183.
• Dimensions of Driver, refer to P.45.
*1 Motor specifications: □
*2 The product that the end of driver model designation has "E" is "Position control type". Detail of model designation, refer to P.16.
*3 ◇ in number of applicable driver represents the series. For more information about the part number, please refer to P.16.

## Torque characteristics (at AC400 V of power voltage <Dotted line represents the torque at 10 % less supply voltage.>)

With oil seal

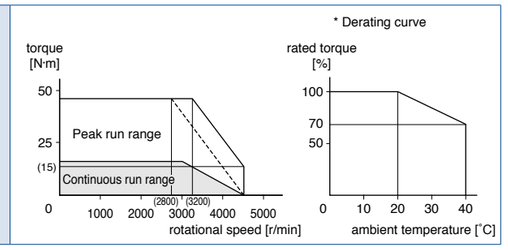


## Dimensions

(For IP67 motor, refer to P.138.)

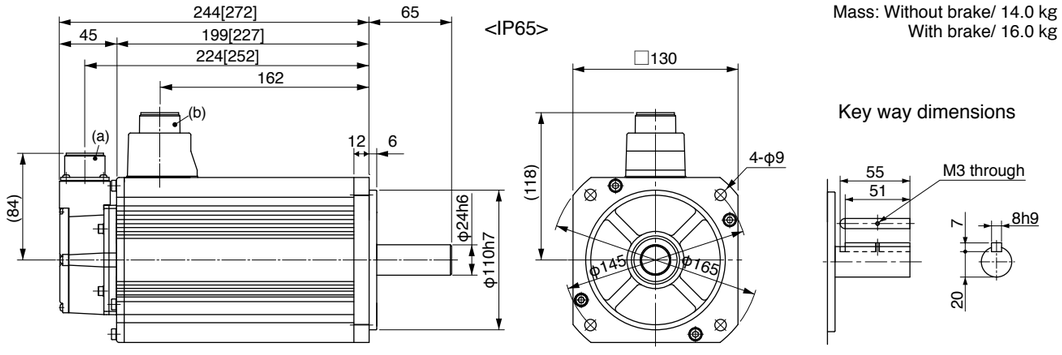


Mass: Without brake/ 14.0 kg
With brake/ 16.0 kg

(a) Encoder connector
(b) Motor/Brake connector

* Figures in [ ] represent the dimensions with brake.

[Unit: mm]

**<Cautions>** Reduce the moment of inertia ratio if high speed response operation is required.
Dimensions are subject to change without notice. Contact us or a dealer for the latest information.
Read the Instruction Manual carefully and understand all precautions and remarks before using the products.

# 400 V MDME 400 W [Middle inertia, Middle capacity]

## Specifications

| | | | AC400 V | |
|---|---|---|---|---|
| Motor model *1 | IP65 | | MDME044GC□ | MDME044SC□ |
| | IP67 | | MDME044G1□ | MDME044S1□ |
| Applicable driver *2 | Model No. | A5Ⅱ, A5 series | MDD◇T2407 | |
| | | A5ⅡE, A5E series | MDD◇T2407E | – |
| | Frame symbol | | D-frame | |
| Power supply capacity (kVA) | | | 0.9 | |
| Rated output (W) | | | 400 | |
| Rated torque (N·m) | | | 1.91 | |
| Momentary Max. peak torque (N·m) | | | 5.73 | |
| Rated current (A(rms)) | | | 1.2 | |
| Max. current (A(o-p)) | | | 4.9 | |
| Regenerative brake frequency (times/min) Note)1 | Without option | | No limit Note)2 | |
| | DV0PM20048 | | No limit Note)2 | |
| Rated rotational speed (r/min) | | | 2000 | |
| Max. rotational speed (r/min) | | | 3000 | |
| Moment of inertia of rotor ($\times 10^{-4}$ kg·m$^2$) | Without brake | | 1.61 | |
| | With brake | | 1.93 | |
| Recommended moment of inertia ratio of the load and the rotor Note)3 | | | 10 times or less | |
| Rotary encoder specifications Note)5 | | | 20-bit Incremental | 17-bit Absolute |
| | Resolution per single turn | | 1048576 | 131072 |

• **Brake specifications** (For details, refer to P.183)
(This brake will be released when it is energized.
Do not use this for braking the motor in motion.)

| | |
|---|---|
| Static friction torque (N·m) | 2.5 or more |
| Engaging time (ms) | 50 or less |
| Releasing time (ms) Note)4 | 15 or less |
| Exciting current (DC) (A) | 0.70±10 % |
| Releasing voltage (DC) (V) | 2 or more |
| Exciting voltage (DC) (V) | 24±2.4 |

• **Permissible load** (For details, refer to P.183)

| | | |
|---|---|---|
| During assembly | Radial load P-direction (N) | 980 |
| | Thrust load A-direction (N) | 588 |
| | Thrust load B-direction (N) | 686 |
| During operation | Radial load P-direction (N) | 490 |
| | Thrust load A, B-direction (N) | 196 |

• For details of Note 1 to Note 5, refer to P.182, P.183.
• Dimensions of Driver, refer to P.44.
*1 Motor specifications: □
*2 The product that the end of driver model designation has "E" is "Position control type". Detail of model designation, refer to P.16.
*3 ◇ in number of applicable driver represents the series. For more information about the part number, please refer to P.16.

## Torque characteristics (at AC400 V of power voltage <Dotted line represents the torque at 10 % less supply voltage.>)

With oil seal

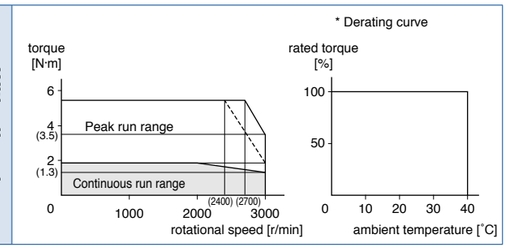


## Dimensions

(For IP67 motor, refer to P.138.)

Mass: Without brake/ 3.1 kg
With brake/ 4.1 kg

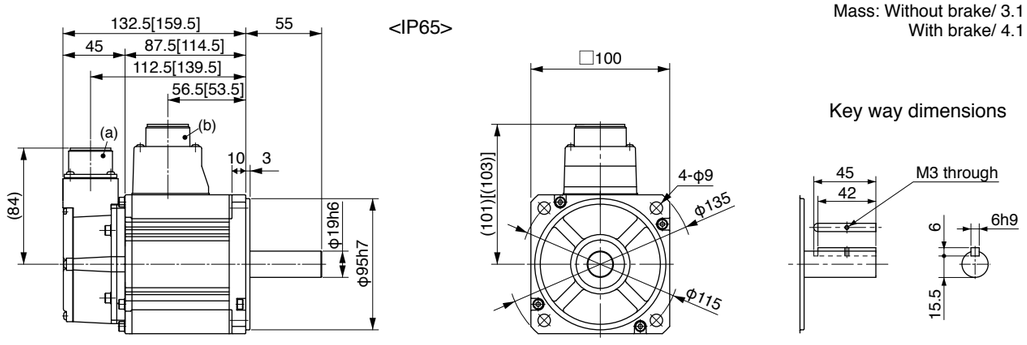


(a) Encoder connector
(b) Motor/Brake connector

* Figures in [ ] represent the dimensions with brake.

[Unit: mm]

**<Cautions>** Reduce the moment of inertia ratio if high speed response operation is required.
Dimensions are subject to change without notice. Contact us or a dealer for the latest information.
Read the Instruction Manual carefully and understand all precautions and remarks before using the products.





# 400 V MDME 600 W [Middle inertia, Middle capacity]

## Specifications

| | | | AC400 V | |
|---|---|---|---|---|
| Motor model *1 | IP65 | | MDME064GC□ | MDME064SC□ |
| | IP67 | | MDME064G1□ | MDME064S1□ |
| Applicable driver *2 | Model No. | A5Ⅱ, A5 series | MDD◇T2407 | |
| | | A5ⅡE, A5E series | MDD◇T2407E | – |
| | Frame symbol | | D-frame | |
| Power supply capacity (kVA) | | | 1.2 | |
| Rated output (W) | | | 600 | |
| Rated torque (N·m) | | | 2.86 | |
| Momentary Max. peak torque (N·m) | | | 8.59 | |
| Rated current (A(rms)) | | | 1.5 | |
| Max. current (A(o-p)) | | | 6.5 | |
| Regenerative brake frequency (times/min) Note)1 | Without option | | No limit Note)2 | |
| | DV0PM20048 | | No limit Note)2 | |
| Rated rotational speed (r/min) | | | 2000 | |
| Max. rotational speed (r/min) | | | 3000 | |
| Moment of inertia of rotor ($\times 10^{-4}$ kg·m$^2$) | Without brake | | 2.03 | |
| | With brake | | 2.35 | |
| Recommended moment of inertia ratio of the load and the rotor Note)3 | | | 10 times or less | |
| Rotary encoder specifications Note)5 | | | 20-bit Incremental | 17-bit Absolute |
| | Resolution per single turn | | 1048576 | 131072 |

• **Brake specifications** (For details, refer to P.183)
(This brake will be released when it is energized.
Do not use this for braking the motor in motion.)

| | |
|---|---|
| Static friction torque (N·m) | 2.5 or more |
| Engaging time (ms) | 50 or less |
| Releasing time (ms) Note)4 | 15 or less |
| Exciting current (DC) (A) | 0.70±10 % |
| Releasing voltage (DC) (V) | 2 or more |
| Exciting voltage (DC) (V) | 24±2.4 |

• **Permissible load** (For details, refer to P.183)

| | | |
|---|---|---|
| During assembly | Radial load P-direction (N) | 980 |
| | Thrust load A-direction (N) | 588 |
| | Thrust load B-direction (N) | 686 |
| During operation | Radial load P-direction (N) | 490 |
| | Thrust load A, B-direction (N) | 196 |

• For details of Note 1 to Note 5, refer to P.182, P.183.
• Dimensions of Driver, refer to P.44.
*1 Motor specifications: □
*2 The product that the end of driver model designation has "E" is "Position control type". Detail of model designation, refer to P.16.
*3 ◇ in number of applicable driver represents the series. For more information about the part number, please refer to P.16.

## Torque characteristics (at AC400 V of power voltage <Dotted line represents the torque at 10 % less supply voltage.>)

With oil seal

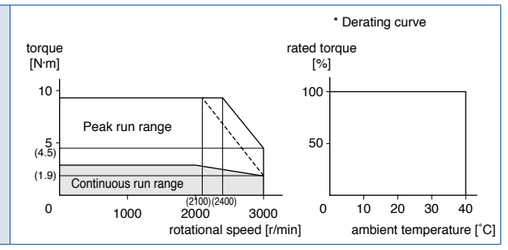


## Dimensions

(For IP67 motor, refer to P.138.)

Mass: Without brake/ 3.5 kg
With brake/ 4.5 kg

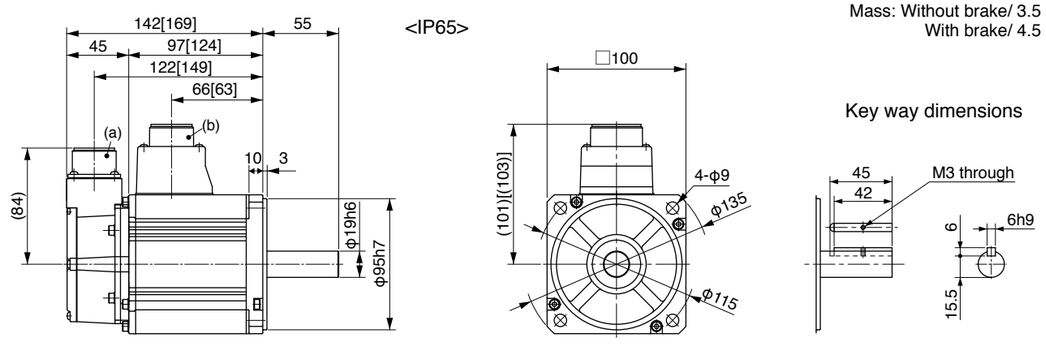


(a) Encoder connector
(b) Motor/Brake connector

* Figures in [ ] represent the dimensions with brake.

[Unit: mm]

**<Cautions>** Reduce the moment of inertia ratio if high speed response operation is required.
Dimensions are subject to change without notice. Contact us or a dealer for the latest information.
Read the Instruction Manual carefully and understand all precautions and remarks before using the products.

# 400 V MDME 1.0 kW [Middle inertia, Middle capacity]

## Specifications

| | | | AC400 V | |
|---|---|---|---|---|
| Motor model *1 | IP65 | | MDME104GC□ | MDME104SC□ |
| | IP67 | | MDME104G1□ | MDME104S1□ |
| Applicable driver *2 | Model No. | A5Ⅱ, A5 series | MDD◇T2412 | |
| | | A5ⅡE, A5E series | MDD◇T2412E | – |
| | Frame symbol | | D-frame | |
| Power supply capacity (kVA) | | | 1.8 | |
| Rated output (W) | | | 1000 | |
| Rated torque (N·m) | | | 4.77 | |
| Momentary Max. peak torque (N·m) | | | 14.3 | |
| Rated current (A(rms)) | | | 2.8 | |
| Max. current (A(o-p)) | | | 12 | |
| Regenerative brake frequency (times/min) Note)1 | Without option | | No limit Note)2 | |
| | DV0PM20048 | | No limit Note)2 | |
| Rated rotational speed (r/min) | | | 2000 | |
| Max. rotational speed (r/min) | | | 3000 | |
| Moment of inertia of rotor ($\times 10^{-4}$ kg·m$^2$) | Without brake | | 4.60 | |
| | With brake | | 5.90 | |
| Recommended moment of inertia ratio of the load and the rotor Note)3 | | | 10 times or less | |
| Rotary encoder specifications Note)5 | | | 20-bit Incremental | 17-bit Absolute |
| | Resolution per single turn | | 1048576 | 131072 |

• **Brake specifications** (For details, refer to P.183)
(This brake will be released when it is energized.
Do not use this for braking the motor in motion.)

| | |
|---|---|
| Static friction torque (N·m) | 4.9 or more |
| Engaging time (ms) | 80 or less |
| Releasing time (ms) Note)4 | 70 or less |
| Exciting current (DC) (A) | 0.59±10 % |
| Releasing voltage (DC) (V) | 2 or more |
| Exciting voltage (DC) (V) | 24±2.4 |

• **Permissible load** (For details, refer to P.183)

| | | |
|---|---|---|
| During assembly | Radial load P-direction (N) | 980 |
| | Thrust load A-direction (N) | 588 |
| | Thrust load B-direction (N) | 686 |
| During operation | Radial load P-direction (N) | 490 |
| | Thrust load A, B-direction (N) | 196 |

• For details of Note 1 to Note 5, refer to P.182, P.183.
• Dimensions of Driver, refer to P.44.
*1 Motor specifications: □
*2 The product that the end of driver model designation has "E" is "Position control type". Detail of model designation, refer to P.16.
*3 ◇ in number of applicable driver represents the series. For more information about the part number, please refer to P.16.

## Torque characteristics (at AC400 V of power voltage <Dotted line represents the torque at 10 % less supply voltage.>)

With oil seal

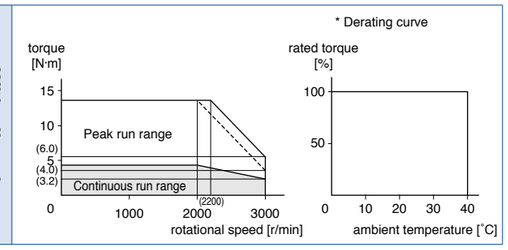


## Dimensions

(For IP67 motor, refer to P.138.)

Mass: Without brake/ 5.2 kg
With brake/ 6.7 kg

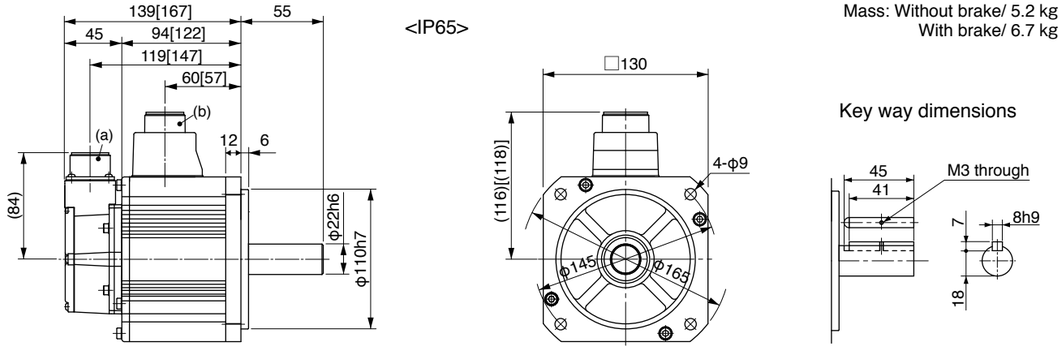


(a) Encoder connector
(b) Motor/Brake connector

* Figures in [ ] represent the dimensions with brake.

[Unit: mm]

**<Cautions>** Reduce the moment of inertia ratio if high speed response operation is required.
Dimensions are subject to change without notice. Contact us or a dealer for the latest information.
Read the Instruction Manual carefully and understand all precautions and remarks before using the products.





# 400 V MDME 1.5 kW [Middle inertia, Middle capacity]

## Specifications

| | | | AC400 V | |
|---|---|---|---|---|
| Motor model *1 | IP65 | | MDME154GC□ | MDME154SC□ |
| | IP67 | | MDME154G1□ | MDME154S1□ |
| Applicable driver *2 | Model No. | A5Ⅱ, A5 series | MDD◇T3420 | |
| | | A5ⅡE, A5E series | MDD◇T3420E | – |
| | Frame symbol | | D-frame | |
| Power supply capacity (kVA) | | | 2.3 | |
| Rated output (W) | | | 1500 | |
| Rated torque (N·m) | | | 7.16 | |
| Momentary Max. peak torque (N·m) | | | 21.5 | |
| Rated current (A(rms)) | | | 4.7 | |
| Max. current (A(o-p)) | | | 20 | |
| Regenerative brake frequency (times/min) Note)1 | Without option | | No limit Note)2 | |
| | DV0PM20048 | | No limit Note)2 | |
| Rated rotational speed (r/min) | | | 2000 | |
| Max. rotational speed (r/min) | | | 3000 | |
| Moment of inertia of rotor ($\times 10^{-4}$ kg·m$^2$) | Without brake | | 6.70 | |
| | With brake | | 7.99 | |
| Recommended moment of inertia ratio of the load and the rotor Note)3 | | | 10 times or less | |
| Rotary encoder specifications Note)5 | | | 20-bit Incremental | 17-bit Absolute |
| | Resolution per single turn | | 1048576 | 131072 |

• **Brake specifications** (For details, refer to P.183)
(This brake will be released when it is energized.
Do not use this for braking the motor in motion.)

| | |
|---|---|
| Static friction torque (N·m) | 13.7 or more |
| Engaging time (ms) | 100 or less |
| Releasing time (ms) Note)4 | 50 or less |
| Exciting current (DC) (A) | 0.79±10 % |
| Releasing voltage (DC) (V) | 2 or more |
| Exciting voltage (DC) (V) | 24±2.4 |

• **Permissible load** (For details, refer to P.183)

| | | |
|---|---|---|
| During assembly | Radial load P-direction (N) | 980 |
| | Thrust load A-direction (N) | 588 |
| | Thrust load B-direction (N) | 686 |
| During operation | Radial load P-direction (N) | 490 |
| | Thrust load A, B-direction (N) | 196 |

• For details of Note 1 to Note 5, refer to P.182, P.183.
• Dimensions of Driver, refer to P.44.
*1 Motor specifications: □
*2 The product that the end of driver model designation has "E" is "Position control type". Detail of model designation, refer to P.16.
*3 ◇ in number of applicable driver represents the series. For more information about the part number, please refer to P.16.

## Torque characteristics (at AC400 V of power voltage <Dotted line represents the torque at 10 % less supply voltage.>)

With oil seal

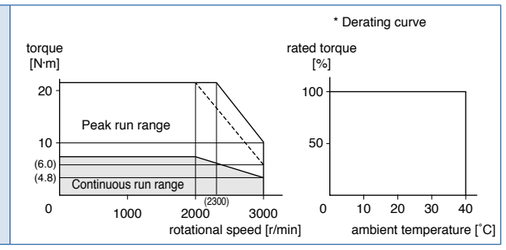


## Dimensions

(For IP67 motor, refer to P.138.)

Mass: Without brake/ 6.7 kg
With brake/ 8.2 kg

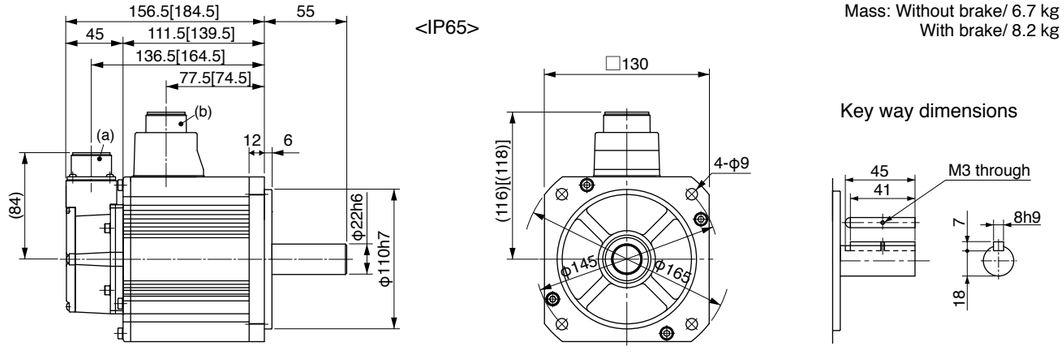


(a) Encoder connector
(b) Motor/Brake connector

* Figures in [ ] represent the dimensions with brake.

[Unit: mm]

**<Cautions>** Reduce the moment of inertia ratio if high speed response operation is required.
Dimensions are subject to change without notice. Contact us or a dealer for the latest information.
Read the Instruction Manual carefully and understand all precautions and remarks before using the products.

# 400 V MDME 2.0 kW [Middle inertia, Middle capacity]

## Specifications

| | | | AC400 V | |
|---|---|---|---|---|
| Motor model *1 | IP65 | | MDME204GC□ | MDME204SC□ |
| | IP67 | | MDME204G1□ | MDME204S1□ |
| Applicable driver *2 | Model No. | A5Ⅱ, A5 series | MED◇T4430 | |
| | | A5ⅡE, A5E series | MED◇T4430E | – |
| | Frame symbol | | E-frame | |
| Power supply capacity (kVA) | | | 3.3 | |
| Rated output (W) | | | 2000 | |
| Rated torque (N·m) | | | 9.55 | |
| Momentary Max. peak torque (N·m) | | | 28.6 | |
| Rated current (A(rms)) | | | 5.9 | |
| Max. current (A(o-p)) | | | 25 | |
| Regenerative brake frequency (times/min) Note)1 | Without option | | No limit Note)2 | |
| | DV0PM20049 | | No limit Note)2 | |
| Rated rotational speed (r/min) | | | 2000 | |
| Max. rotational speed (r/min) | | | 3000 | |
| Moment of inertia of rotor ($\times 10^{-4}$ kg·m$^2$) | Without brake | | 8.72 | |
| | With brake | | 10.0 | |
| Recommended moment of inertia ratio of the load and the rotor Note)3 | | | 10 times or less | |
| Rotary encoder specifications Note)5 | | | 20-bit Incremental | 17-bit Absolute |
| | Resolution per single turn | | 1048576 | 131072 |

• **Brake specifications** (For details, refer to P.183)
(This brake will be released when it is energized.
Do not use this for braking the motor in motion.)

| | |
|---|---|
| Static friction torque (N·m) | 13.7 or more |
| Engaging time (ms) | 100 or less |
| Releasing time (ms) Note)4 | 50 or less |
| Exciting current (DC) (A) | 0.79±10 % |
| Releasing voltage (DC) (V) | 2 or more |
| Exciting voltage (DC) (V) | 24±2.4 |

• **Permissible load** (For details, refer to P.183)

| | | |
|---|---|---|
| During assembly | Radial load P-direction (N) | 980 |
| | Thrust load A-direction (N) | 588 |
| | Thrust load B-direction (N) | 686 |
| During operation | Radial load P-direction (N) | 490 |
| | Thrust load A, B-direction (N) | 196 |

• For details of Note 1 to Note 5, refer to P.182, P.183.
• Dimensions of Driver, refer to P.45.
*1 Motor specifications: □
*2 The product that the end of driver model designation has "E" is "Position control type". Detail of model designation, refer to P.16.
*3 ◇ in number of applicable driver represents the series. For more information about the part number, please refer to P.16.

## Torque characteristics (at AC400 V of power voltage <Dotted line represents the torque at 10 % less supply voltage.>)

With oil seal

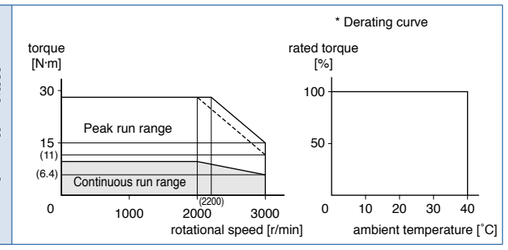


## Dimensions

(For IP67 motor, refer to P.138.)

Mass: Without brake/ 8.0 kg
With brake/ 9.5 kg

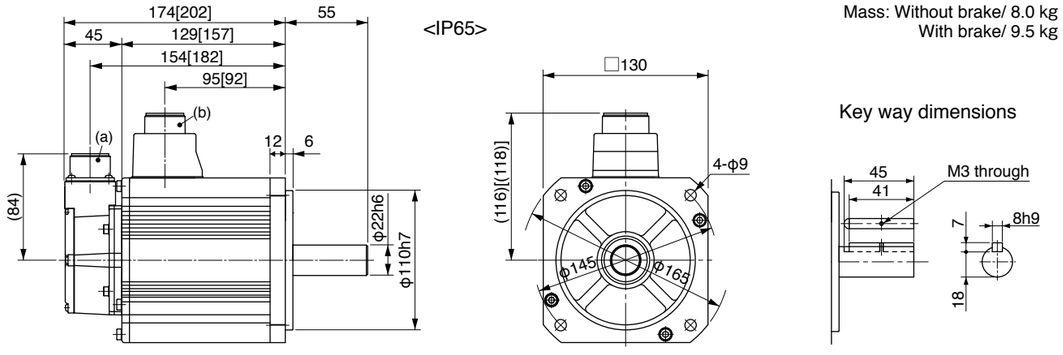


(a) Encoder connector
(b) Motor/Brake connector

* Figures in [ ] represent the dimensions with brake.

[Unit: mm]

**<Cautions>** Reduce the moment of inertia ratio if high speed response operation is required.
Dimensions are subject to change without notice. Contact us or a dealer for the latest information.
Read the Instruction Manual carefully and understand all precautions and remarks before using the products.





# 400 V MDME 3.0 kW [Middle inertia, Middle capacity]

## Specifications

| | | | AC400 V | |
|---|---|---|---|---|
| Motor model *1 | IP65 | | MDME304GC□ | MDME304SC□ |
| | IP67 | | MDME304G1□ | MDME304S1□ |
| Applicable driver *2 | Model No. | A5Ⅱ, A5 series | MFD◇T5440 | |
| | | A5ⅡE, A5E series | MFD◇T5440E | – |
| | Frame symbol | | F-frame | |
| Power supply capacity (kVA) | | | 4.5 | |
| Rated output (W) | | | 3000 | |
| Rated torque (N·m) | | | 14.3 | |
| Momentary Max. peak torque (N·m) | | | 43.0 | |
| Rated current (A(rms)) | | | 8.7 | |
| Max. current (A(o-p)) | | | 37 | |
| Regenerative brake frequency (times/min) Note)1 | Without option | | No limit Note)2 | |
| | DV0PM20049×2 | | No limit Note)2 | |
| Rated rotational speed (r/min) | | | 2000 | |
| Max. rotational speed (r/min) | | | 3000 | |
| Moment of inertia of rotor ($\times 10^{-4}$ kg·m$^2$) | Without brake | | 12.9 | |
| | With brake | | 14.2 | |
| Recommended moment of inertia ratio of the load and the rotor Note)3 | | | 10 times or less | |
| Rotary encoder specifications Note)5 | | | 20-bit Incremental | 17-bit Absolute |
| | Resolution per single turn | | 1048576 | 131072 |

• **Brake specifications** (For details, refer to P.183)
(This brake will be released when it is energized.
Do not use this for braking the motor in motion.)

| | |
|---|---|
| Static friction torque (N·m) | 16.2 or more |
| Engaging time (ms) | 110 or less |
| Releasing time (ms) Note)4 | 50 or less |
| Exciting current (DC) (A) | 0.90±10 % |
| Releasing voltage (DC) (V) | 2 or more |
| Exciting voltage (DC) (V) | 24±2.4 |

• **Permissible load** (For details, refer to P.183)

| | | |
|---|---|---|
| During assembly | Radial load P-direction (N) | 980 |
| | Thrust load A-direction (N) | 588 |
| | Thrust load B-direction (N) | 686 |
| During operation | Radial load P-direction (N) | 784 |
| | Thrust load A, B-direction (N) | 343 |

• For details of Note 1 to Note 5, refer to P.182, P.183.
• Dimensions of Driver, refer to P.45.
*1 Motor specifications: □
*2 The product that the end of driver model designation has "E" is "Position control type". Detail of model designation, refer to P.16.
*3 ◇ in number of applicable driver represents the series. For more information about the part number, please refer to P.16.

## Torque characteristics (at AC400 V of power voltage <Dotted line represents the torque at 10 % less supply voltage.>)

With oil seal

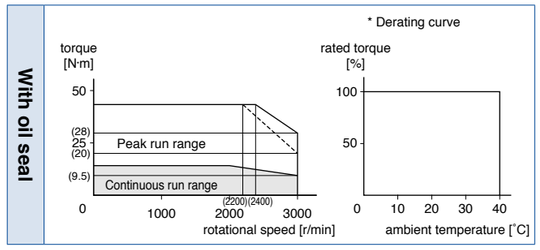


## Dimensions

(For IP67 motor, refer to P.139.)

Mass: Without brake/ 11.0 kg
With brake/ 12.6 kg

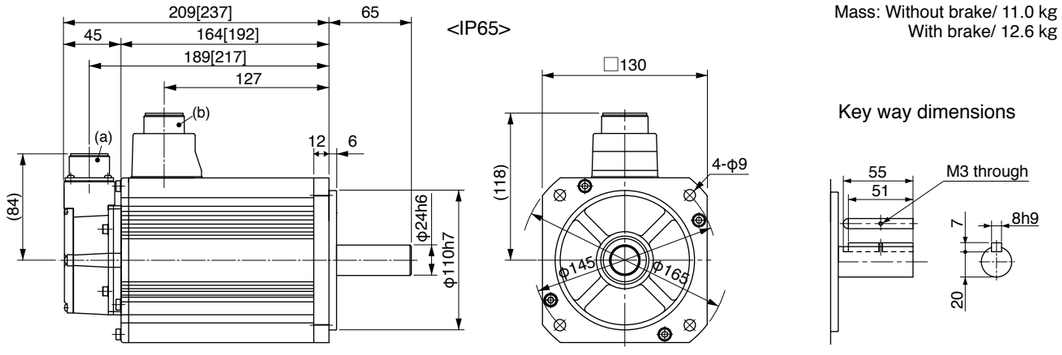


(a) Encoder connector
(b) Motor/Brake connector

* Figures in [ ] represent the dimensions with brake.

[Unit: mm]

**<Cautions>** Reduce the moment of inertia ratio if high speed response operation is required.
Dimensions are subject to change without notice. Contact us or a dealer for the latest information.
Read the Instruction Manual carefully and understand all precautions and remarks before using the products.

# 400 V MDME 4.0 kW [Middle inertia, Middle capacity]

## Specifications

| | | | AC400 V | |
|---|---|---|---|---|
| Motor model *1 | IP65 | | MDME404GC□ | MDME404SC□ |
| | IP67 | | MDME404G1□ | MDME404S1□ |
| Applicable driver *2 | Model No. | A5Ⅱ, A5 series | MFD◇TA464 | |
| | | A5ⅡE, A5E series | MFD◇TA464E | – |
| | Frame symbol | | F-frame | |
| Power supply capacity (kVA) | | | 6.8 | |
| Rated output (W) | | | 4000 | |
| Rated torque (N·m) | | | 19.1 | |
| Momentary Max. peak torque (N·m) | | | 57.3 | |
| Rated current (A(rms)) | | | 10.6 | |
| Max. current (A(o-p)) | | | 45 | |
| Regenerative brake frequency (times/min) Note)1 | Without option | | No limit Note)2 | |
| | DV0PM20049×2 | | No limit Note)2 | |
| Rated rotational speed (r/min) | | | 2000 | |
| Max. rotational speed (r/min) | | | 3000 | |
| Moment of inertia of rotor ($\times10^{-4}$ kg·m$^2$) | Without brake | | 37.6 | |
| | With brake | | 42.9 | |
| Recommended moment of inertia ratio of the load and the rotor Note)3 | | | 10 times or less | |
| Rotary encoder specifications Note)5 | | | 20-bit Incremental | 17-bit Absolute |
| | Resolution per single turn | | 1048576 | 131072 |

• **Brake specifications** (For details, refer to P.183)
(This brake will be released when it is energized.
Do not use this for braking the motor in motion.)

| | |
|---|---|
| Static friction torque (N·m) | 24.5 or more |
| Engaging time (ms) | 80 or less |
| Releasing time (ms) Note)4 | 25 or less |
| Exciting current (DC) (A) | 1.3±10 % |
| Releasing voltage (DC) (V) | 2 or more |
| Exciting voltage (DC) (V) | 24±2.4 |

• **Permissible load** (For details, refer to P.183)

| | | |
|---|---|---|
| During assembly | Radial load P-direction (N) | 1666 |
| | Thrust load A-direction (N) | 784 |
| | Thrust load B-direction (N) | 980 |
| During operation | Radial load P-direction (N) | 784 |
| | Thrust load A, B-direction (N) | 343 |

• For details of Note 1 to Note 5, refer to P.182, P.183.
• Dimensions of Driver, refer to P.45.
*1 Motor specifications: □
*2 The product that the end of driver model designation has "E" is "Position control type". Detail of model designation, refer to P.16.
*3 ◇ in number of applicable driver represents the series. For more information about the part number, please refer to P.16.

## Torque characteristics (at AC400 V of power voltage <Dotted line represents the torque at 10 % less supply voltage.>)

With oil seal

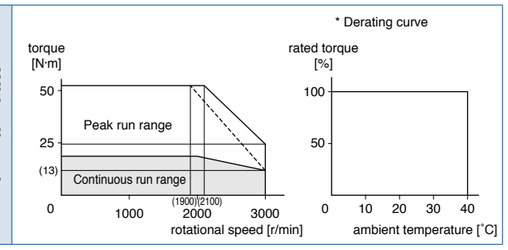


## Dimensions

(For IP67 motor, refer to P.139.)

Mass: Without brake/ 15.5 kg
With brake/ 18.7 kg

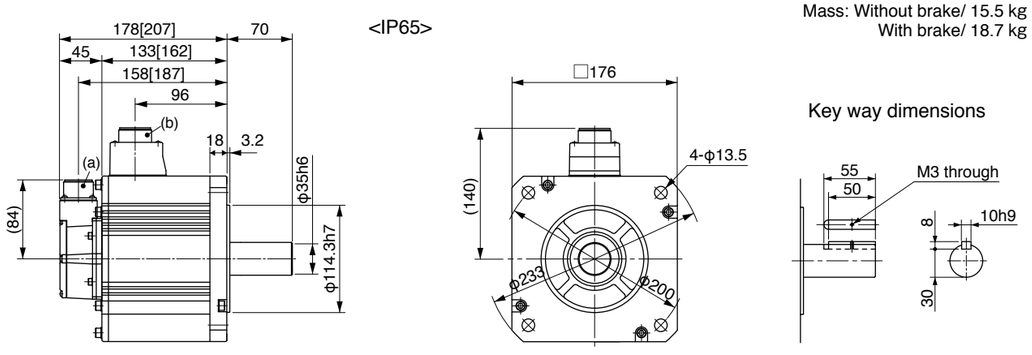


(a) Encoder connector
(b) Motor/Brake connector

* Figures in [ ] represent the dimensions with brake.

[Unit: mm]

**<Cautions>** Reduce the moment of inertia ratio if high speed response operation is required.
Dimensions are subject to change without notice. Contact us or a dealer for the latest information.
Read the Instruction Manual carefully and understand all precautions and remarks before using the products.





# 400 V MDME 5.0 kW [Middle inertia, Middle capacity]

## Specifications

| | | | AC400 V | |
|---|---|---|---|---|
| Motor model *1 | IP65 | | MDME504GC□ | MDME504SC□ |
| | IP67 | | MDME504G1□ | MDME504S1□ |
| Applicable driver *2 | Model No. | A5Ⅱ, A5 series | MFD◇TA464 | |
| | | A5ⅡE, A5E series | MFD◇TA464E | – |
| | Frame symbol | | F-frame | |
| Power supply capacity (kVA) | | | 7.5 | |
| Rated output (W) | | | 5000 | |
| Rated torque (N·m) | | | 23.9 | |
| Momentary Max. peak torque (N·m) | | | 71.6 | |
| Rated current (A(rms)) | | | 13.0 | |
| Max. current (A(o-p)) | | | 55 | |
| Regenerative brake frequency (times/min) Note)1 | Without option | | 120 | |
| | DV0PM20049×2 | | No limit Note)2 | |
| Rated rotational speed (r/min) | | | 2000 | |
| Max. rotational speed (r/min) | | | 3000 | |
| Moment of inertia of rotor ($\times10^{-4}$ kg·m$^2$) | Without brake | | 48.0 | |
| | With brake | | 53.3 | |
| Recommended moment of inertia ratio of the load and the rotor Note)3 | | | 10 times or less | |
| Rotary encoder specifications Note)5 | | | 20-bit Incremental | 17-bit Absolute |
| | Resolution per single turn | | 1048576 | 131072 |

• **Brake specifications** (For details, refer to P.183)
(This brake will be released when it is energized.
Do not use this for braking the motor in motion.)

| | |
|---|---|
| Static friction torque (N·m) | 24.5 or more |
| Engaging time (ms) | 80 or less |
| Releasing time (ms) Note)4 | 25 or less |
| Exciting current (DC) (A) | 1.3±10 % |
| Releasing voltage (DC) (V) | 2 or more |
| Exciting voltage (DC) (V) | 24±2.4 |

• **Permissible load** (For details, refer to P.183)

| | | |
|---|---|---|
| During assembly | Radial load P-direction (N) | 1666 |
| | Thrust load A-direction (N) | 784 |
| | Thrust load B-direction (N) | 980 |
| During operation | Radial load P-direction (N) | 784 |
| | Thrust load A, B-direction (N) | 343 |

• For details of Note 1 to Note 5, refer to P.182, P.183.
• Dimensions of Driver, refer to P.45.
*1 Motor specifications: □
*2 The product that the end of driver model designation has "E" is "Position control type". Detail of model designation, refer to P.16.
*3 ◇ in number of applicable driver represents the series. For more information about the part number, please refer to P.16.

## Torque characteristics (at AC400 V of power voltage <Dotted line represents the torque at 10 % less supply voltage.>)

With oil seal

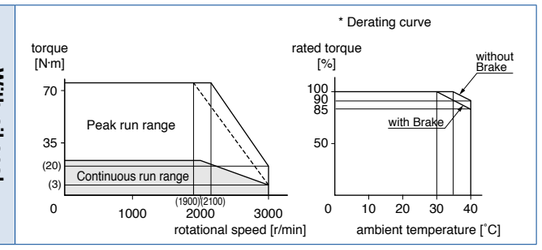


## Dimensions

(For IP67 motor, refer to P.139.)

Mass: Without brake/ 18.6 kg
With brake/ 21.8 kg

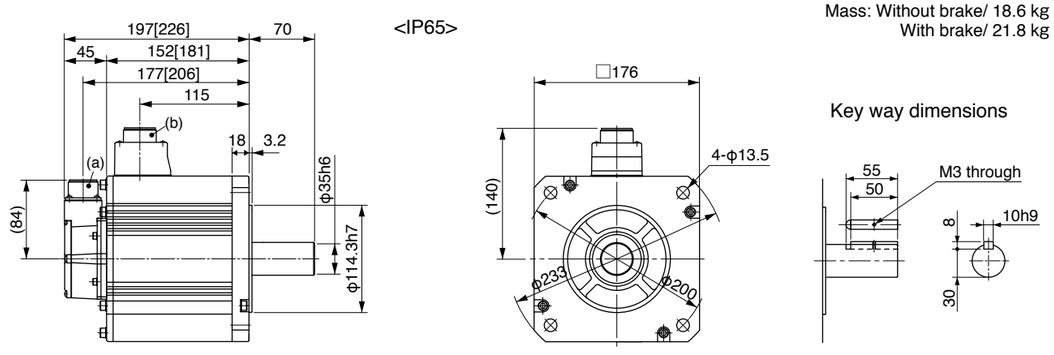


(a) Encoder connector
(b) Motor/Brake connector

* Figures in [ ] represent the dimensions with brake.

[Unit: mm]

**<Cautions>** Reduce the moment of inertia ratio if high speed response operation is required.
Dimensions are subject to change without notice. Contact us or a dealer for the latest information.
Read the Instruction Manual carefully and understand all precautions and remarks before using the products.

# 400 V MDME 7.5 kW [Middle inertia, Middle capacity]

## Specifications

| | | | AC400 V | |
|---|---|---|---|---|
| Motor model *1 | IP65 | | – | – |
| | IP67 | | MDME754G1□ | MDME754S1□ |
| Applicable driver *2 | Model No. | A5Ⅱ, A5 series | MGD◇TB4A2 | |
| | | A5ⅡE, A5E series | – | – |
| | Frame symbol | | G-frame | |
| Power supply capacity (kVA) | | | 11 | |
| Rated output (W) | | | 7500 | |
| Rated torque (N·m) | | | 47.8 | |
| Momentary Max. peak torque (N·m) | | | 119 | |
| Rated current (A(rms)) | | | 22 | |
| Max. current (A(o-p)) | | | 83 | |
| Regenerative brake frequency (times/min) Note)1 | Without option | | No limit Note)2 | |
| | DV0PM20049×3 | | No limit Note)2 | |
| Rated rotational speed (r/min) | | | 1500 | |
| Max. rotational speed (r/min) | | | 3000 | |
| Moment of inertia of rotor ($\times10^{-4}$ kg·m²) | Without brake | | 101 | |
| | With brake | | 107 | |
| Recommended moment of inertia ratio of the load and the rotor Note)3 | | | 10 times or less | |
| Rotary encoder specifications Note)5 | | | 20-bit Incremental | 17-bit Absolute |
| | Resolution per single turn | | 1048576 | 131072 |

• **Brake specifications** (For details, refer to P.183)
(This brake will be released when it is energized. Do not use this for braking the motor in motion.)

| | |
|---|---|
| Static friction torque (N·m) | 58.8 or more |
| Engaging time (ms) | 150 or less |
| Releasing time (ms) Note)4 | 50 or less |
| Exciting current (DC) (A) | 1.4±10 % |
| Releasing voltage (DC) (V) | 2 or more |
| Exciting voltage (DC) (V) | 24±2.4 |

• **Permissible load** (For details, refer to P.183)

| | | |
|---|---|---|
| During assembly | Radial load P-direction (N) | 2058 |
| | Thrust load A-direction (N) | 980 |
| | Thrust load B-direction (N) | 1176 |
| During operation | Radial load P-direction (N) | 1176 |
| | Thrust load A, B-direction (N) | 490 |

• For details of Note 1 to Note 5, refer to P.182, P.183.
• Dimensions of Driver, refer to P.46.
*1 Motor specifications: □
*2 The product that the end of driver model designation has "E" is "Position control type". Detail of model designation, refer to P.16.
*3 ◇ in number of applicable driver represents the series. For more information about the part number, please refer to P.16.

## Torque characteristics (at AC200 V of power voltage <Dotted line represents the torque at 10 % less supply voltage.>)

With oil seal

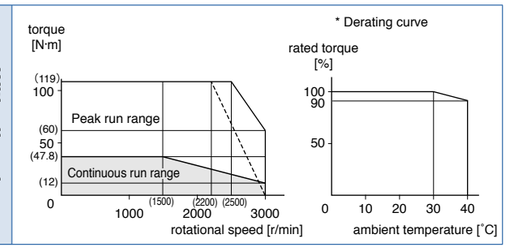


## Dimensions

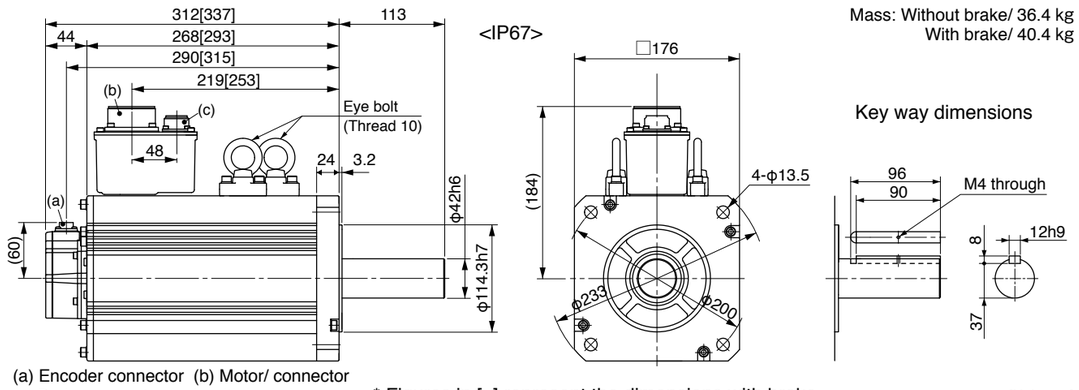


Mass: Without brake/ 36.4 kg
With brake/ 40.4 kg

(a) Encoder connector (b) Motor/ connector
(c) Brake connector (only with brake)

* Figures in [ ] represent the dimensions with brake.

[Unit: mm]

**<Cautions>** Reduce the moment of inertia ratio if high speed response operation is required.
Dimensions are subject to change without notice. Contact us or a dealer for the latest information.
Read the Instruction Manual carefully and understand all precautions and remarks before using the products.





# 400 V MDME 11.0 kW [Middle inertia, Middle capacity]

## Specifications

| | | | AC400 V | |
|---|---|---|---|---|
| Motor model *1 | IP65 | | – | – |
| | IP67 | | MDMEC14G1□ | MDMEC14S1□ |
| Applicable driver *2 | Model No. | A5Ⅱ, A5 series | MHD◇TB4A2 | |
| | | A5ⅡE, A5E series | – | – |
| | Frame symbol | | H-frame | |
| Power supply capacity (kVA) | | | 17 | |
| Rated output (W) | | | 11000 | |
| Rated torque (N·m) | | | 70 | |
| Momentary Max. peak torque (N·m) | | | 175 | |
| Rated current (A(rms)) | | | 27.1 | |
| Max. current (A(o-p)) | | | 101 | |
| Regenerative brake frequency (times/min) Note)1 | Without option | | No limit Note)2 | |
| | DV0PM20059 | | No limit Note)2 | |
| Rated rotational speed (r/min) | | | 1500 | |
| Max. rotational speed (r/min) | | | 2000 | |
| Moment of inertia of rotor ($\times10^{-4}$ kg·m²) | Without brake | | 212 | |
| | With brake | | 220 | |
| Recommended moment of inertia ratio of the load and the rotor Note)3 | | | 10 times or less | |
| Rotary encoder specifications Note)5 | | | 20-bit Incremental | 17-bit Absolute |
| | Resolution per single turn | | 1048576 | 131072 |

• **Brake specifications** (For details, refer to P.183)
(This brake will be released when it is energized. Do not use this for braking the motor in motion.)

| | |
|---|---|
| Static friction torque (N·m) | 100 or more |
| Engaging time (ms) | 300 or less |
| Releasing time (ms) Note)4 | 140 or less |
| Exciting current (DC) (A) | 1.08±10 % |
| Releasing voltage (DC) (V) | 2 or more |
| Exciting voltage (DC) (V) | 24±2.4 |

• **Permissible load** (For details, refer to P.183)

| | | |
|---|---|---|
| During assembly | Radial load P-direction (N) | 4508 |
| | Thrust load A-direction (N) | 1470 |
| | Thrust load B-direction (N) | 1764 |
| During operation | Radial load P-direction (N) | 2254 |
| | Thrust load A, B-direction (N) | 686 |

• For details of Note 1 to Note 5, refer to P.182, P.183.
• Dimensions of Driver, refer to P.46.
*1 Motor specifications: □
*2 The product that the end of driver model designation has "E" is "Position control type". Detail of model designation, refer to P.16.
*3 ◇ in number of applicable driver represents the series. For more information about the part number, please refer to P.16.

## Torque characteristics (at AC200 V of power voltage <Dotted line represents the torque at 10 % less supply voltage.>)

With oil seal

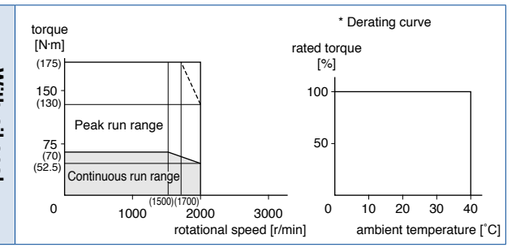


## Dimensions

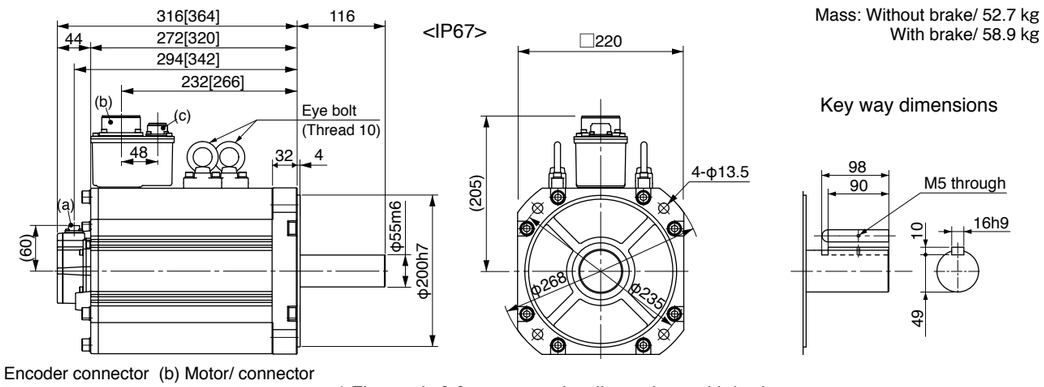


Mass: Without brake/ 52.7 kg
With brake/ 58.9 kg

(a) Encoder connector (b) Motor/ connector
(c) Brake connector (only with brake)

* Figures in [ ] represent the dimensions with brake.

[Unit: mm]

**<Cautions>** Reduce the moment of inertia ratio if high speed response operation is required.
Dimensions are subject to change without notice. Contact us or a dealer for the latest information.
Read the Instruction Manual carefully and understand all precautions and remarks before using the products.

# 400 V MDME 15.0 kW [Middle inertia, Middle capacity]

## Specifications

| | | | AC400 V | |
|---|---|---|---|---|
| Motor model *1 | IP65 | | – | – |
| | IP67 | | MDMEC54G1□ | MDMEC54S1□ |
| Applicable driver *2 | Model No. | A5Ⅱ, A5 series | MHD◇TB4A2 | |
| | | A5ⅡE, A5E series | – | – |
| | Frame symbol | | H-frame | |
| Power supply capacity (kVA) | | | 22 | |
| Rated output (W) | | | 15000 | |
| Rated torque (N·m) | | | 95.5 | |
| Momentary Max. peak torque (N·m) | | | 224 | |
| Rated current (A(rms)) | | | 33.1 | |
| Max. current (A(o-p)) | | | 118 | |
| Regenerative brake frequency (times/min) Note)1 | Without option | | No limit Note)2 | |
| | DV0PM20059 | | No limit Note)2 | |
| Rated rotational speed (r/min) | | | 1500 | |
| Max. rotational speed (r/min) | | | 2000 | |
| Moment of inertia of rotor ($\times10^{-4}$ kg·m$^2$) | Without brake | | 302 | |
| | With brake | | 211 | |
| Recommended moment of inertia ratio of the load and the rotor Note)3 | | | 10 times or less | |
| Rotary encoder specifications Note)5 | | | 20-bit Incremental | 17-bit Absolute |
| | Resolution per single turn | | 1048576 | 131072 |

• **Brake specifications** (For details, refer to P.183)
(This brake will be released when it is energized. Do not use this for braking the motor in motion.)

| | |
|---|---|
| Static friction torque (N·m) | 100 or more |
| Engaging time (ms) | 300 or less |
| Releasing time (ms) Note)4 | 140 or less |
| Exciting current (DC) (A) | 1.08±10 % |
| Releasing voltage (DC) (V) | 2 or more |
| Exciting voltage (DC) (V) | 24±2.4 |

• **Permissible load** (For details, refer to P.183)

| | | |
|---|---|---|
| During assembly | Radial load P-direction (N) | 4508 |
| | Thrust load A-direction (N) | 1470 |
| | Thrust load B-direction (N) | 1764 |
| During operation | Radial load P-direction (N) | 2254 |
| | Thrust load A, B-direction (N) | 686 |

• For details of Note 1 to Note 5, refer to P.182, P.183.
• Dimensions of Driver, refer to P.47.
*1 Motor specifications: □
*2 The product that the end of driver model designation has "E" is "Position control type". Detail of model designation, refer to P.16.
*3 ◇ in number of applicable driver represents the series. For more information about the part number, please refer to P.16.

## Torque characteristics (at AC200 V of power voltage <Dotted line represents the torque at 10 % less supply voltage.>)

With oil seal

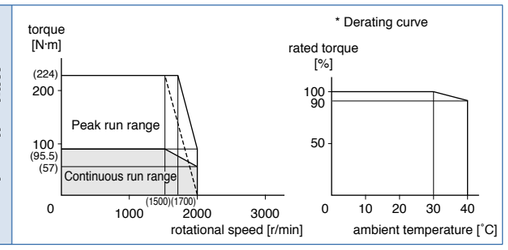


## Dimensions

Mass: Without brake/ 70.2 kg
With brake/ 76.3 kg

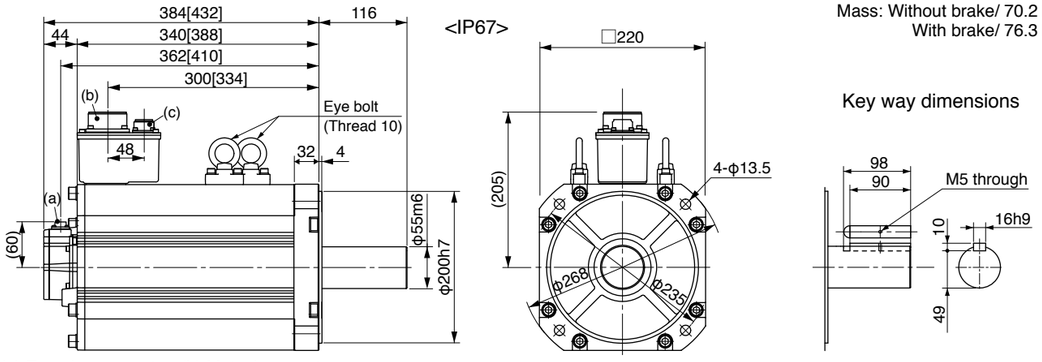


(a) Encoder connector (b) Motor/ connector
(c) Brake connector (only with brake)

* Figures in [ ] represent the dimensions with brake.

[Unit: mm]

**<Cautions>** Reduce the moment of inertia ratio if high speed response operation is required.
Dimensions are subject to change without notice. Contact us or a dealer for the latest information.
Read the Instruction Manual carefully and understand all precautions and remarks before using the products.





# 400 V MFME 1.5 kW [Middle inertia, Middle capacity Flat type]

## Specifications

| | | | AC400 V | |
|---|---|---|---|---|
| Motor model *1 | IP65 | | – | – |
| | IP67 | | MFME154G1□ | MFME154S1□ |
| Applicable driver *2 | Model No. | A5Ⅱ, A5 series | MDD◇T3420 | |
| | | A5ⅡE, A5E series | MDD◇T3420E | – |
| | Frame symbol | | D-frame | |
| Power supply capacity (kVA) | | | 2.4 | |
| Rated output (W) | | | 1500 | |
| Rated torque (N·m) | | | 7.16 | |
| Momentary Max. peak torque (N·m) | | | 21.5 | |
| Rated current (A(rms)) | | | 3.8 | |
| Max. current (A(o-p)) | | | 16 | |
| Regenerative brake frequency (times/min) Note)1 | Without option | | 100 | |
| | DV0PM20048 | | No limit Note)2 | |
| Rated rotational speed (r/min) | | | 2000 | |
| Max. rotational speed (r/min) | | | 3000 | |
| Moment of inertia of rotor ($\times10^{-4}$ kg·m$^2$) | Without brake | | 18.2 | |
| | With brake | | 23.5 | |
| Recommended moment of inertia ratio of the load and the rotor Note)3 | | | 10 times or less | |
| Rotary encoder specifications Note)5 | | | 20-bit Incremental | 17-bit Absolute |
| | Resolution per single turn | | 1048576 | 131072 |

• **Brake specifications** (For details, refer to P.183)
(This brake will be released when it is energized. Do not use this for braking the motor in motion.)

| | |
|---|---|
| Static friction torque (N·m) | 7.8 or more |
| Engaging time (ms) | 80 or less |
| Releasing time (ms) Note)4 | 35 or less |
| Exciting current (DC) (A) | 0.83±10 % |
| Releasing voltage (DC) (V) | 2 or more |
| Exciting voltage (DC) (V) | 24±2.4 |

• **Permissible load** (For details, refer to P.183)

| | | |
|---|---|---|
| During assembly | Radial load P-direction (N) | 980 |
| | Thrust load A-direction (N) | 588 |
| | Thrust load B-direction (N) | 686 |
| During operation | Radial load P-direction (N) | 490 |
| | Thrust load A, B-direction (N) | 196 |

• For details of Note 1 to Note 5, refer to P.182, P.183.
• Dimensions of Driver, refer to P.44.
*1 Motor specifications: □
*2 The product that the end of driver model designation has "E" is "Position control type". Detail of model designation, refer to P.16.
*3 ◇ in number of applicable driver represents the series. For more information about the part number, please refer to P.16.

## Torque characteristics (at AC200 V of power voltage <Dotted line represents the torque at 10 % less supply voltage.>)

With oil seal

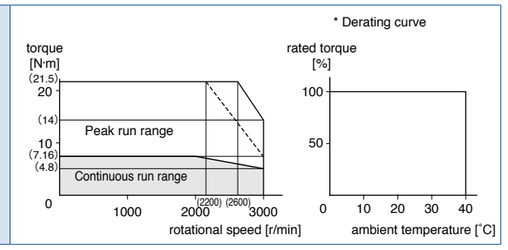


## Dimensions

Mass: Without brake/ 9.5 kg
With brake/ 12.5 kg

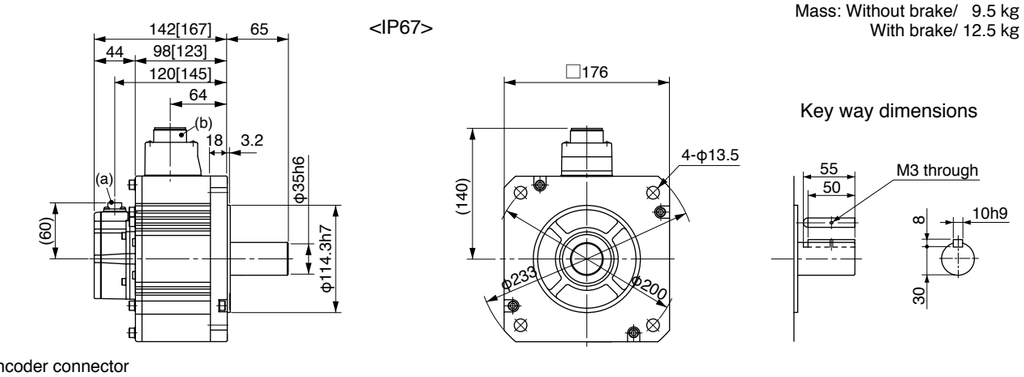


(a) Encoder connector
(b) Motor/Brake connector

* Figures in [ ] represent the dimensions with brake.

[Unit: mm]

**<Cautions>** Reduce the moment of inertia ratio if high speed response operation is required.
Dimensions are subject to change without notice. Contact us or a dealer for the latest information.
Read the Instruction Manual carefully and understand all precautions and remarks before using the products.

# 400 V MFME 2.5 kW [Middle inertia, Middle capacity Flat type]

## Specifications

| | | | AC400 V | |
|---|---|---|---|---|
| Motor model *1 | IP65 | | – | – |
| | IP67 | | MFME254G1□ | MFME254S1□ |
| Applicable driver *2 | Model No. | A5Ⅱ, A5 series | MED◇T4430 | |
| | | A5ⅡE, A5E series | MED◇T4430E | – |
| | Frame symbol | | E-frame | |
| Power supply capacity (kVA) | | | 3.9 | |
| Rated output (W) | | | 2500 | |
| Rated torque (N·m) | | | 11.9 | |
| Momentary Max. peak torque (N·m) | | | 30.4 | |
| Rated current (A(rms)) | | | 6.7 | |
| Max. current (A(o-p)) | | | 29 | |
| Regenerative brake frequency (times/min) Note)1 | Without option | | 75 | |
| | DV0PM20049 | | No limit Note)2 | |
| Rated rotational speed (r/min) | | | 2000 | |
| Max. rotational speed (r/min) | | | 3000 | |
| Moment of inertia of rotor ($\times 10^{-4}$ kg·m$^2$) | Without brake | | 35.8 | |
| | With brake | | 45.2 | |
| Recommended moment of inertia ratio of the load and the rotor Note)3 | | | 10 times or less | |
| Rotary encoder specifications Note)5 | | | 20-bit Incremental | 17-bit Absolute |
| | Resolution per single turn | | 1048576 | 131072 |

• **Brake specifications** (For details, refer to P.183)
(This brake will be released when it is energized.
Do not use this for braking the motor in motion.)

| | |
|---|---|
| Static friction torque (N·m) | 21.6 or more |
| Engaging time (ms) | 150 or less |
| Releasing time (ms) Note)4 | 100 or less |
| Exciting current (DC) (A) | 0.75±10 % |
| Releasing voltage (DC) (V) | 2 or more |
| Exciting voltage (DC) (V) | 24±2.4 |

• **Permissible load** (For details, refer to P.183)

| | | |
|---|---|---|
| During assembly | Radial load P-direction (N) | 1862 |
| | Thrust load A-direction (N) | 686 |
| | Thrust load B-direction (N) | 686 |
| During operation | Radial load P-direction (N) | 784 |
| | Thrust load A, B-direction (N) | 294 |

• For details of Note 1 to Note 5, refer to P.182, P.183.
• Dimensions of Driver, refer to P.45.
*1 Motor specifications: □
*2 The product that the end of driver model designation has "E" is "Position control type". Detail of model designation, refer to P.16.
*3 ◇ in number of applicable driver represents the series. For more information about the part number, please refer to P.16.

## Torque characteristics (at AC200 V of power voltage <Dotted line represents the torque at 10 % less supply voltage.>)

With oil seal

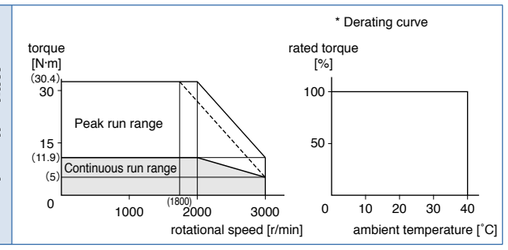


## Dimensions

Mass: Without brake/ 13.1 kg
With brake/ 17.2 kg

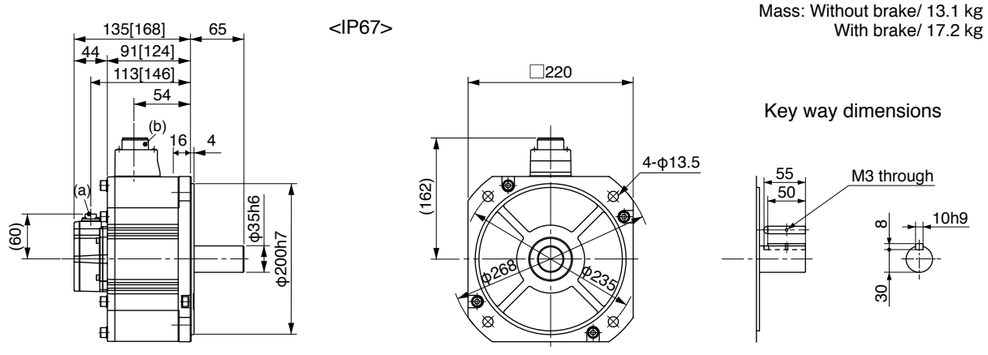


(a) Encoder connector
(b) Motor/Brake connector

* Figures in [ ] represent the dimensions with brake.

[Unit: mm]

**<Cautions>** Reduce the moment of inertia ratio if high speed response operation is required.
Dimensions are subject to change without notice. Contact us or a dealer for the latest information.
Read the Instruction Manual carefully and understand all precautions and remarks before using the products.





# 400 V MFME 4.5 kW [Middle inertia, Middle capacity Flat type]

## Specifications

| | | | AC400 V | |
|---|---|---|---|---|
| Motor model *1 | IP65 | | – | – |
| | IP67 | | MFME454G1□ | MFME454S1□ |
| Applicable driver *2 | Model No. | A5Ⅱ, A5 series | MFD◇TA464 | |
| | | A5ⅡE, A5E series | MFD◇TA464E | – |
| | Frame symbol | | F-frame | |
| Power supply capacity (kVA) | | | 6.9 | |
| Rated output (W) | | | 4500 | |
| Rated torque (N·m) | | | 21.5 | |
| Momentary Max. peak torque (N·m) | | | 54.9 | |
| Rated current (A(rms)) | | | 12.4 | |
| Max. current (A(o-p)) | | | 53 | |
| Regenerative brake frequency (times/min) Note)1 | Without option | | 67 | |
| | DV0PM20049×2 | | 375 | |
| Rated rotational speed (r/min) | | | 2000 | |
| Max. rotational speed (r/min) | | | 3000 | |
| Moment of inertia of rotor ($\times 10^{-4}$ kg·m$^2$) | Without brake | | 63.1 | |
| | With brake | | 70.9 | |
| Recommended moment of inertia ratio of the load and the rotor Note)3 | | | 10 times or less | |
| Rotary encoder specifications Note)5 | | | 20-bit Incremental | 17-bit Absolute |
| | Resolution per single turn | | 1048576 | 131072 |

• **Brake specifications** (For details, refer to P.183)
(This brake will be released when it is energized.
Do not use this for braking the motor in motion.)

| | |
|---|---|
| Static friction torque (N·m) | 31.4 or more |
| Engaging time (ms) | 150 or less |
| Releasing time (ms) Note)4 | 100 or less |
| Exciting current (DC) (A) | 0.75±10 % |
| Releasing voltage (DC) (V) | 2 or more |
| Exciting voltage (DC) (V) | 24±2.4 |

• **Permissible load** (For details, refer to P.183)

| | | |
|---|---|---|
| During assembly | Radial load P-direction (N) | 1862 |
| | Thrust load A-direction (N) | 686 |
| | Thrust load B-direction (N) | 686 |
| During operation | Radial load P-direction (N) | 784 |
| | Thrust load A, B-direction (N) | 294 |

• For details of Note 1 to Note 5, refer to P.182, P.183.
• Dimensions of Driver, refer to P.45.
*1 Motor specifications: □
*2 The product that the end of driver model designation has "E" is "Position control type". Detail of model designation, refer to P.16.
*3 ◇ in number of applicable driver represents the series. For more information about the part number, please refer to P.16.

## Torque characteristics (at AC200 V of power voltage <Dotted line represents the torque at 10 % less supply voltage.>)

With oil seal

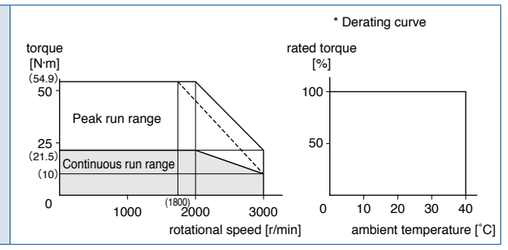


## Dimensions

Mass: Without brake/ 18.2 kg
With brake/ 23.1 kg

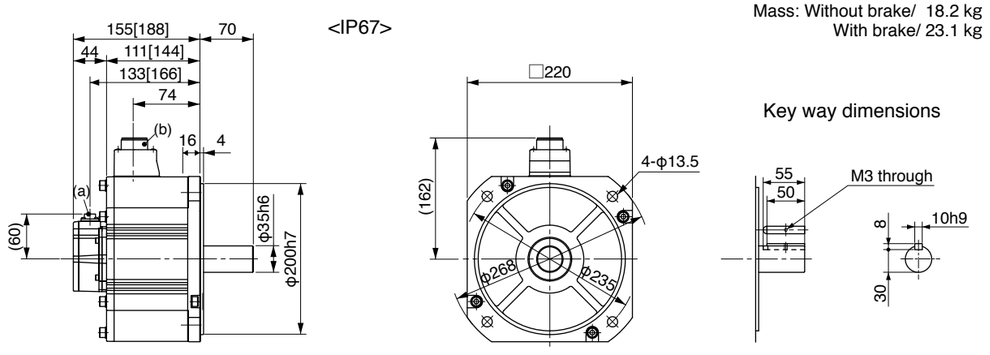


(a) Encoder connector
(b) Motor/Brake connector

* Figures in [ ] represent the dimensions with brake.

[Unit: mm]

**<Cautions>** Reduce the moment of inertia ratio if high speed response operation is required.
Dimensions are subject to change without notice. Contact us or a dealer for the latest information.
Read the Instruction Manual carefully and understand all precautions and remarks before using the products.

# 400 V MGME 0.9 kW [Middle inertia, Middle capacity]

## Specifications

| | | | AC400 V | |
|---|---|---|---|---|
| Motor model *1 | IP65 | | MGME094GC□ | MGME094SC□ |
| | IP67 | | MGME094G1□ | MGME094S1□ |
| Applicable driver *2 | Model No. | A5Ⅱ, A5 series | MDD◇T3420 | |
| | | A5ⅡE, A5E series | MDD◇T3420E | – |
| | Frame symbol | | D-frame | |
| Power supply capacity (kVA) | | | 1.8 | |
| Rated output (W) | | | 900 | |
| Rated torque (N·m) | | | 8.59 | |
| Momentary Max. peak torque (N·m) | | | 19.3 | |
| Rated current (A(rms)) | | | 3.8 | |
| Max. current (A(o-p)) | | | 12 | |
| Regenerative brake frequency (times/min) Note)1 | Without option | | No limit Note)2 | |
| | DV0PM20048 | | No limit Note)2 | |
| Rated rotational speed (r/min) | | | 1000 | |
| Max. rotational speed (r/min) | | | 2000 | |
| Moment of inertia of rotor ($\times 10^{-4}$ kg·m$^2$) | Without brake | | 6.70 | |
| | With brake | | 7.99 | |
| Recommended moment of inertia ratio of the load and the rotor Note)3 | | | 10 times or less | |
| Rotary encoder specifications Note)5 | | | 20-bit Incremental | 17-bit Absolute |
| | Resolution per single turn | | 1048576 | 131072 |

• **Brake specifications** (For details, refer to P.183)
(This brake will be released when it is energized.
Do not use this for braking the motor in motion.)

| | |
|---|---|
| Static friction torque (N·m) | 13.7 or more |
| Engaging time (ms) | 100 or less |
| Releasing time (ms) Note)4 | 50 or less |
| Exciting current (DC) (A) | 0.79±10 % |
| Releasing voltage (DC) (V) | 2 or more |
| Exciting voltage (DC) (V) | 24±2.4 |

• **Permissible load** (For details, refer to P.183)

| | | |
|---|---|---|
| During assembly | Radial load P-direction (N) | 980 |
| | Thrust load A-direction (N) | 588 |
| | Thrust load B-direction (N) | 686 |
| During operation | Radial load P-direction (N) | 686 |
| | Thrust load A, B-direction (N) | 196 |

• For details of Note 1 to Note 5, refer to P.182, P.183.
• Dimensions of Driver, refer to P.44.
*1 Motor specifications: □
*2 The product that the end of driver model designation has "E" is "Position control type". Detail of model designation, refer to P.16.
*3 ◇ in number of applicable driver represents the series. For more information about the part number, please refer to P.16.

## Torque characteristics (at AC400 V of power voltage <Dotted line represents the torque at 10 % less supply voltage.>)

With oil seal

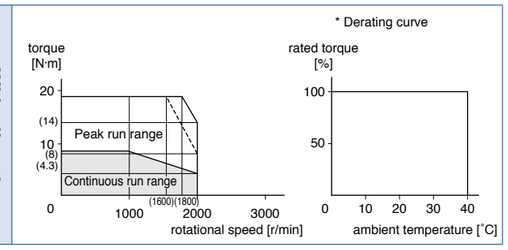


## Dimensions

(For IP67 motor, refer to P.139.)

Mass: Without brake/ 6.7 kg
With brake/ 8.2 kg

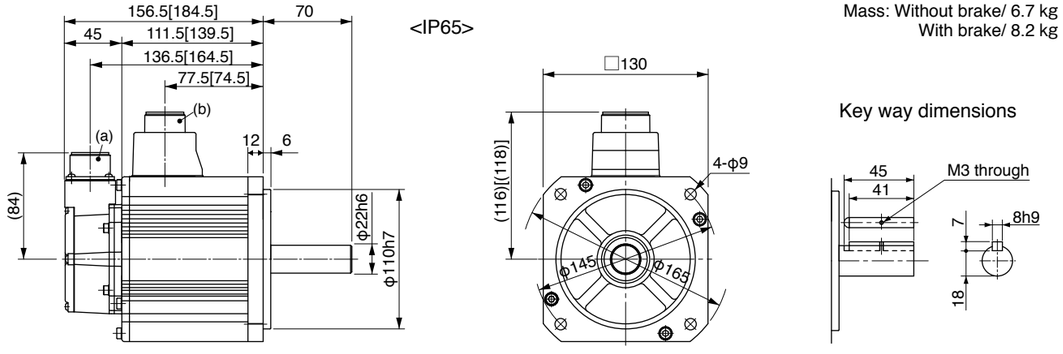


(a) Encoder connector
(b) Motor/Brake connector

* Figures in [ ] represent the dimensions with brake.

[Unit: mm]

**<Cautions>** Reduce the moment of inertia ratio if high speed response operation is required.
Dimensions are subject to change without notice. Contact us or a dealer for the latest information.
Read the Instruction Manual carefully and understand all precautions and remarks before using the products.





# 400 V MGME 2.0 kW [Middle inertia, Middle capacity]

## Specifications

| | | | AC400 V | |
|---|---|---|---|---|
| Motor model *1 | IP65 | | MGME204GC□ | MGME204SC□ |
| | IP67 | | MGME204G1□ | MGME204S1□ |
| Applicable driver *2 | Model No. | A5Ⅱ, A5 series | MFD◇T5440 | |
| | | A5ⅡE, A5E series | MFD◇T5440E | – |
| | Frame symbol | | F-frame | |
| Power supply capacity (kVA) | | | 3.8 | |
| Rated output (W) | | | 2000 | |
| Rated torque (N·m) | | | 19.1 | |
| Momentary Max. peak torque (N·m) | | | 47.7 | |
| Rated current (A(rms)) | | | 8.5 | |
| Max. current (A(o-p)) | | | 30 | |
| Regenerative brake frequency (times/min) Note)1 | Without option | | No limit Note)2 | |
| | DV0PM20049×2 | | No limit Note)2 | |
| Rated rotational speed (r/min) | | | 1000 | |
| Max. rotational speed (r/min) | | | 2000 | |
| Moment of inertia of rotor ($\times 10^{-4}$ kg·m$^2$) | Without brake | | 30.3 | |
| | With brake | | 35.6 | |
| Recommended moment of inertia ratio of the load and the rotor Note)3 | | | 10 times or less | |
| Rotary encoder specifications Note)5 | | | 20-bit Incremental | 17-bit Absolute |
| | Resolution per single turn | | 1048576 | 131072 |

• **Brake specifications** (For details, refer to P.183)
(This brake will be released when it is energized.
Do not use this for braking the motor in motion.)

| | |
|---|---|
| Static friction torque (N·m) | 24.5 or more |
| Engaging time (ms) | 80 or less |
| Releasing time (ms) Note)4 | 25 or less |
| Exciting current (DC) (A) | 1.3±10 % |
| Releasing voltage (DC) (V) | 2 or more |
| Exciting voltage (DC) (V) | 24±2.4 |

• **Permissible load** (For details, refer to P.183)

| | | |
|---|---|---|
| During assembly | Radial load P-direction (N) | 1666 |
| | Thrust load A-direction (N) | 784 |
| | Thrust load B-direction (N) | 980 |
| During operation | Radial load P-direction (N) | 1176 |
| | Thrust load A, B-direction (N) | 490 |

• For details of Note 1 to Note 5, refer to P.182, P.183.
• Dimensions of Driver, refer to P.45.
*1 Motor specifications: □
*2 The product that the end of driver model designation has "E" is "Position control type". Detail of model designation, refer to P.16.
*3 ◇ in number of applicable driver represents the series. For more information about the part number, please refer to P.16.

## Torque characteristics (at AC400 V of power voltage <Dotted line represents the torque at 10 % less supply voltage.>)

With oil seal

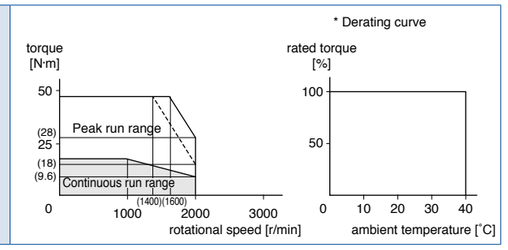


## Dimensions

(For IP67 motor, refer to P.139.)

Mass: Without brake/ 14.0 kg
With brake/ 17.5 kg

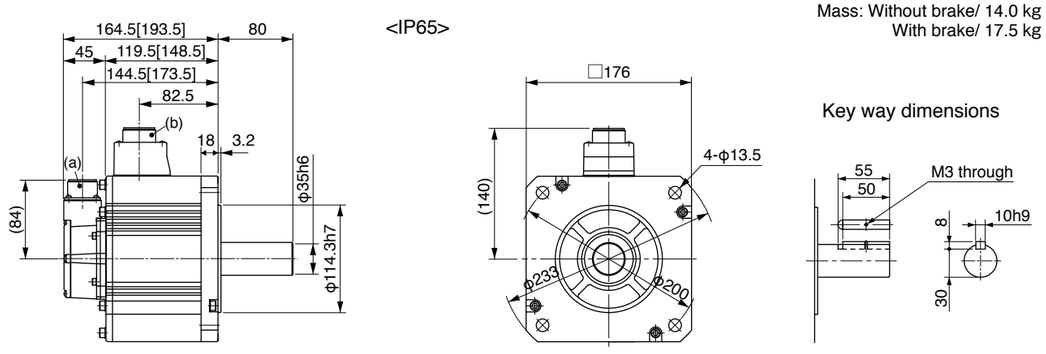


(a) Encoder connector
(b) Motor/Brake connector

* Figures in [ ] represent the dimensions with brake.

[Unit: mm]

**<Cautions>** Reduce the moment of inertia ratio if high speed response operation is required.
Dimensions are subject to change without notice. Contact us or a dealer for the latest information.
Read the Instruction Manual carefully and understand all precautions and remarks before using the products.

# 400 V MGME 3.0 kW [Middle inertia, Middle capacity]

## Specifications

| | | | AC400 V | |
|---|---|---|---|---|
| Motor model *1 | IP65 | | MGME304GC□ | MGME304SC□ |
| | IP67 | | MGME304G1□ | MGME304S1□ |
| Applicable driver *2 | Model No. | A5Ⅱ, A5 series | MFD◇TA464 | |
| | | A5ⅡE, A5E series | MFD◇TA464E | – |
| | Frame symbol | | F-frame | |
| Power supply capacity (kVA) | | | 4.5 | |
| Rated output (W) | | | 3000 | |
| Rated torque (N·m) | | | 28.7 | |
| Momentary Max. peak torque (N·m) | | | 71.7 | |
| Rated current (A(rms)) | | | 11.3 | |
| Max. current (A(o-p)) | | | 40 | |
| Regenerative brake frequency (times/min) Note)1 | Without option | | No limit Note)2 | |
| | DV0PM20049×2 | | No limit Note)2 | |
| Rated rotational speed (r/min) | | | 1000 | |
| Max. rotational speed (r/min) | | | 2000 | |
| Moment of inertia of rotor ($\times10^{-4}$ kg·m$^2$) | Without brake | | 48.4 | |
| | With brake | | 53.7 | |
| Recommended moment of inertia ratio of the load and the rotor Note)3 | | | 10 times or less | |
| Rotary encoder specifications Note)5 | | | 20-bit Incremental | 17-bit Absolute |
| | Resolution per single turn | | 1048576 | 131072 |

• **Brake specifications** (For details, refer to P.183)
(This brake will be released when it is energized.
Do not use this for braking the motor in motion.)

| | |
|---|---|
| Static friction torque (N·m) | 58.8 or more |
| Engaging time (ms) | 150 or less |
| Releasing time (ms) Note)4 | 50 or less |
| Exciting current (DC) (A) | 1.4±10 % |
| Releasing voltage (DC) (V) | 2 or more |
| Exciting voltage (DC) (V) | 24±2.4 |

• **Permissible load** (For details, refer to P.183)

| | | |
|---|---|---|
| During assembly | Radial load P-direction (N) | 2058 |
| | Thrust load A-direction (N) | 980 |
| | Thrust load B-direction (N) | 1176 |
| During operation | Radial load P-direction (N) | 1470 |
| | Thrust load A, B-direction (N) | 490 |

• For details of Note 1 to Note 5, refer to P.182, P.183.
• Dimensions of Driver, refer to P.45.
*1 Motor specifications: □
*2 The product that the end of driver model designation has "E" is "Position control type". Detail of model designation, refer to P.16.
*3 ◇ in number of applicable driver represents the series. For more information about the part number, please refer to P.16.

## Torque characteristics (at AC400 V of power voltage <Dotted line represents the torque at 10 % less supply voltage.>)

With oil seal

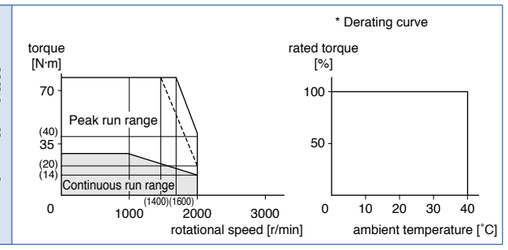


## Dimensions

(For IP67 motor, refer to P.139.)

Mass: Without brake/ 20.0 kg
With brake/ 23.5 kg

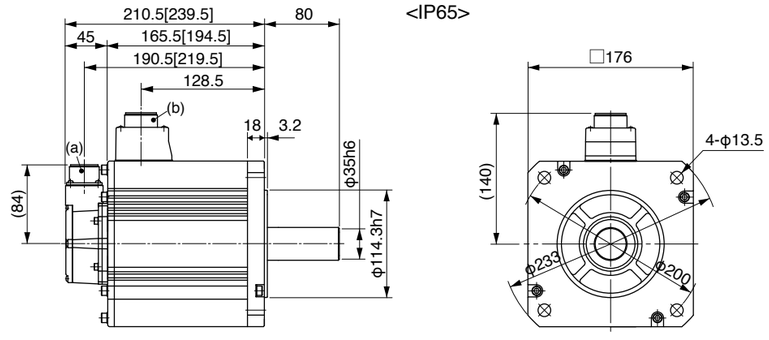


Key way dimensions

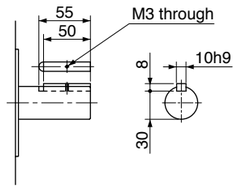


(a) Encoder connector
(b) Motor/Brake connector

* Figures in [ ] represent the dimensions with brake.

[Unit: mm]

**<Cautions>** Reduce the moment of inertia ratio if high speed response operation is required.
Dimensions are subject to change without notice. Contact us or a dealer for the latest information.
Read the Instruction Manual carefully and understand all precautions and remarks before using the products.





# 400 V MGME 4.5 kW [Middle inertia, Middle capacity]

## Specifications

| | | | AC400 V | |
|---|---|---|---|---|
| Motor model *1 | IP65 | | – | – |
| | IP67 | | MGME454G1□ | MGME454S1□ |
| Applicable driver *2 | Model No. | A5Ⅱ, A5 series | MFD◇TA464 | |
| | | A5ⅡE, A5E series | MFD◇TA464E | – |
| | Frame symbol | | F-frame | |
| Power supply capacity (kVA) | | | 7.5 | |
| Rated output (W) | | | 4500 | |
| Rated torque (N·m) | | | 43.0 | |
| Momentary Max. peak torque (N·m) | | | 107 | |
| Rated current (A(rms)) | | | 14.8 | |
| Max. current (A(o-p)) | | | 55 | |
| Regenerative brake frequency (times/min) Note)1 | Without option | | No limit Note)2 | |
| | DV0PM20049×2 | | No limit Note)2 | |
| Rated rotational speed (r/min) | | | 1000 | |
| Max. rotational speed (r/min) | | | 2000 | |
| Moment of inertia of rotor ($\times10^{-4}$ kg·m$^2$) | Without brake | | 79.1 | |
| | With brake | | 84.4 | |
| Recommended moment of inertia ratio of the load and the rotor Note)3 | | | 10 times or less | |
| Rotary encoder specifications Note)5 | | | 20-bit Incremental | 17-bit Absolute |
| | Resolution per single turn | | 1048576 | 131072 |

• **Brake specifications** (For details, refer to P.183)
(This brake will be released when it is energized.
Do not use this for braking the motor in motion.)

| | |
|---|---|
| Static friction torque (N·m) | 58.8 or more |
| Engaging time (ms) | 150 or less |
| Releasing time (ms) Note)4 | 50 or less |
| Exciting current (DC) (A) | 1.4±10 % |
| Releasing voltage (DC) (V) | 2 or more |
| Exciting voltage (DC) (V) | 24±2.4 |

• **Permissible load** (For details, refer to P.183)

| | | |
|---|---|---|
| During assembly | Radial load P-direction (N) | 2058 |
| | Thrust load A-direction (N) | 980 |
| | Thrust load B-direction (N) | 1176 |
| During operation | Radial load P-direction (N) | 1470 |
| | Thrust load A, B-direction (N) | 490 |

• For details of Note 1 to Note 5, refer to P.182, P.183.
• Dimensions of Driver, refer to P.45.
*1 Motor specifications: □
*2 The product that the end of driver model designation has "E" is "Position control type". Detail of model designation, refer to P.16.
*3 ◇ in number of applicable driver represents the series. For more information about the part number, please refer to P.16.

## Torque characteristics (at AC200 V of power voltage <Dotted line represents the torque at 10 % less supply voltage.>)

With oil seal

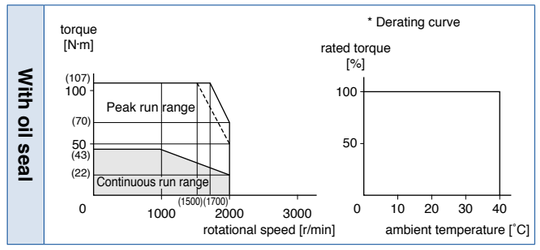


## Dimensions

Mass: Without brake/ 29.4 kg
With brake/ 33.0 kg

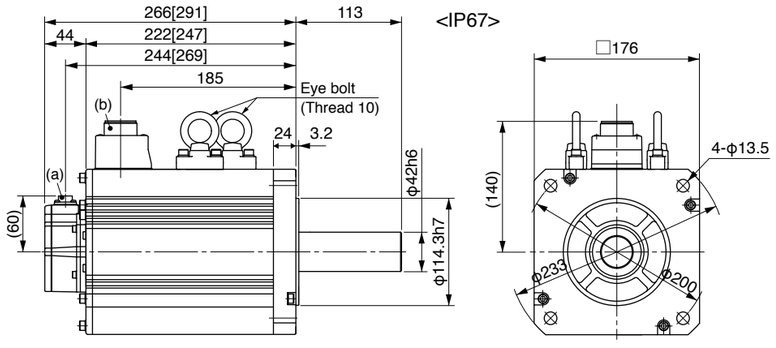


Key way dimensions

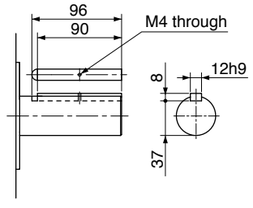


(a) Encoder connector
(b) Motor/Brake connector

* Figures in [ ] represent the dimensions with brake.

[Unit: mm]

**<Cautions>** Reduce the moment of inertia ratio if high speed response operation is required.
Dimensions are subject to change without notice. Contact us or a dealer for the latest information.
Read the Instruction Manual carefully and understand all precautions and remarks before using the products.

# 400 V MGME 6.0 kW [Middle inertia, Middle capacity]

## Specifications

| | | | AC400 V | |
|---|---|---|---|---|
| Motor model *1 | IP65 | | – | – |
| | IP67 | | MGME604G1□ | MGME604S1□ |
| Applicable driver *2 | Model No. | A5Ⅱ, A5 series | MGD◇TB4A2 | |
| | | A5ⅡE, A5E series | – | – |
| | Frame symbol | | G-frame | |
| Power supply capacity (kVA) | | | 9.0 | |
| Rated output (W) | | | 6000 | |
| Rated torque (N·m) | | | 57.3 | |
| Momentary Max. peak torque (N·m) | | | 143 | |
| Rated current (A(rms)) | | | 19.4 | |
| Max. current (A(o-p)) | | | 74 | |
| Regenerative brake frequency (times/min) Note)1 | Without option | | No limit Note)2 | |
| | DV0PM20049×3 | | No limit Note)2 | |
| Rated rotational speed (r/min) | | | 1000 | |
| Max. rotational speed (r/min) | | | 2000 | |
| Moment of inertia of rotor ($\times10^{-4}$ kg·m$^2$) | Without brake | | 101 | |
| | With brake | | 107 | |
| Recommended moment of inertia ratio of the load and the rotor Note)3 | | | 10 times or less | |
| Rotary encoder specifications Note)5 | | | 20-bit Incremental | 17-bit Absolute |
| | Resolution per single turn | | 1048576 | 131072 |

• **Brake specifications** (For details, refer to P.183)
(This brake will be released when it is energized. Do not use this for braking the motor in motion.)

| | |
|---|---|
| Static friction torque (N·m) | 58.8 or more |
| Engaging time (ms) | 150 or less |
| Releasing time (ms) Note)4 | 50 or less |
| Exciting current (DC) (A) | 1.4±10 % |
| Releasing voltage (DC) (V) | 2 or more |
| Exciting voltage (DC) (V) | 24±2.4 |

• **Permissible load** (For details, refer to P.183)

| | | |
|---|---|---|
| During assembly | Radial load P-direction (N) | 2058 |
| | Thrust load A-direction (N) | 980 |
| | Thrust load B-direction (N) | 1176 |
| During operation | Radial load P-direction (N) | 1764 |
| | Thrust load A, B-direction (N) | 588 |

• For details of Note 1 to Note 5, refer to P.182, P.183.
• Dimensions of Driver, refer to P.46.
*1 Motor specifications: □
*2 The product that the end of driver model designation has "E" is "Position control type". Detail of model designation, refer to P.16.
*3 ◇ in number of applicable driver represents the series. For more information about the part number, please refer to P.16.

## Torque characteristics (at AC200 V of power voltage <Dotted line represents the torque at 10 % less supply voltage.>)

With oil seal

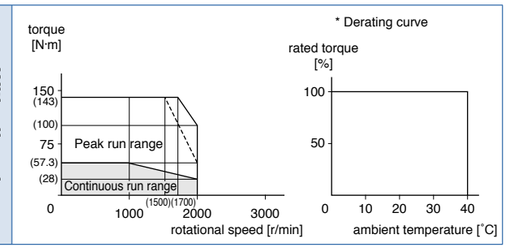


## Dimensions

Mass: Without brake/ 36.4 kg
With brake/ 40.4 kg

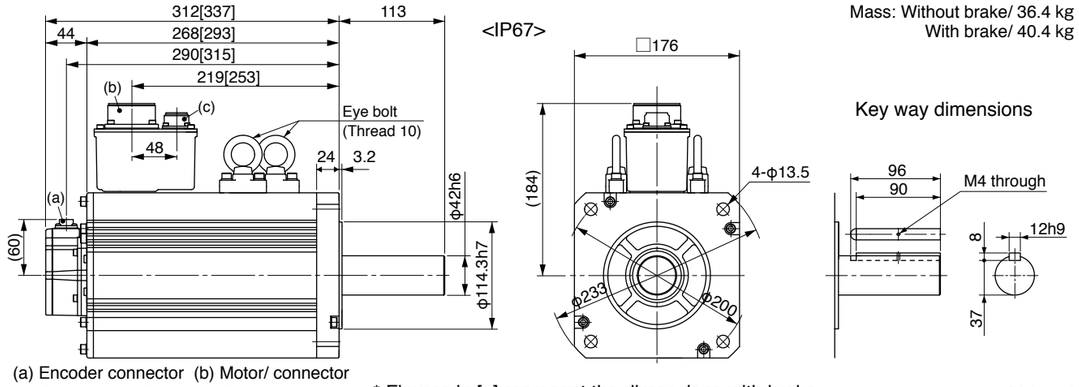


(a) Encoder connector (b) Motor/ connector
(c) Brake connector (only with brake)

* Figures in [ ] represent the dimensions with brake.

[Unit: mm]

**<Cautions>** Reduce the moment of inertia ratio if high speed response operation is required.
Dimensions are subject to change without notice. Contact us or a dealer for the latest information.
Read the Instruction Manual carefully and understand all precautions and remarks before using the products.





# 400 V MHME 1.0 kW [High inertia, Middle capacity]

## Specifications

| | | | AC400 V | |
|---|---|---|---|---|
| Motor model *1 | IP65 | | MHME104GC□ | MHME104SC□ |
| | IP67 | | MHME104G1□ | MHME104S1□ |
| Applicable driver *2 | Model No. | A5Ⅱ, A5 series | MDD◇T2412 | |
| | | A5ⅡE, A5E series | MDD◇T2412E | – |
| | Frame symbol | | D-frame | |
| Power supply capacity (kVA) | | | 1.8 | |
| Rated output (W) | | | 1000 | |
| Rated torque (N·m) | | | 4.77 | |
| Momentary Max. peak torque (N·m) | | | 14.3 | |
| Rated current (A(rms)) | | | 2.9 | |
| Max. current (A(o-p)) | | | 12 | |
| Regenerative brake frequency (times/min) Note)1 | Without option | | 83 | |
| | DV0PM20048 | | No limit Note)2 | |
| Rated rotational speed (r/min) | | | 2000 | |
| Max. rotational speed (r/min) | | | 3000 | |
| Moment of inertia of rotor ($\times10^{-4}$ kg·m$^2$) | Without brake | | 24.7 | |
| | With brake | | 26.0 | |
| Recommended moment of inertia ratio of the load and the rotor Note)3 | | | 5 times or less | |
| Rotary encoder specifications Note)5 | | | 20-bit Incremental | 17-bit Absolute |
| | Resolution per single turn | | 1048576 | 131072 |

• **Brake specifications** (For details, refer to P.183)
(This brake will be released when it is energized. Do not use this for braking the motor in motion.)

| | |
|---|---|
| Static friction torque (N·m) | 4.9 or more |
| Engaging time (ms) | 80 or less |
| Releasing time (ms) Note)4 | 70 or less |
| Exciting current (DC) (A) | 0.59±10 % |
| Releasing voltage (DC) (V) | 2 or more |
| Exciting voltage (DC) (V) | 24±2.4 |

• **Permissible load** (For details, refer to P.183)

| | | |
|---|---|---|
| During assembly | Radial load P-direction (N) | 980 |
| | Thrust load A-direction (N) | 588 |
| | Thrust load B-direction (N) | 686 |
| During operation | Radial load P-direction (N) | 490 |
| | Thrust load A, B-direction (N) | 196 |

• For details of Note 1 to Note 5, refer to P.182, P.183.
• Dimensions of Driver, refer to P.44.
*1 Motor specifications: □
*2 The product that the end of driver model designation has "E" is "Position control type". Detail of model designation, refer to P.16.
*3 ◇ in number of applicable driver represents the series. For more information about the part number, please refer to P.16.

## Torque characteristics (at AC400 V of power voltage <Dotted line represents the torque at 10 % less supply voltage.>)

With oil seal

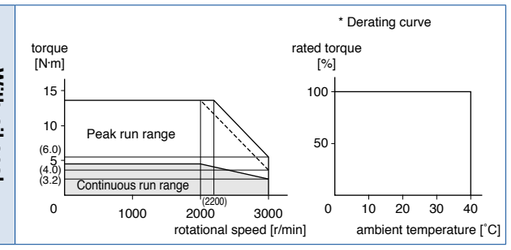


## Dimensions

(For IP67 motor, refer to P.140.)

Mass: Without brake/ 6.7 kg
With brake/ 8.1 kg

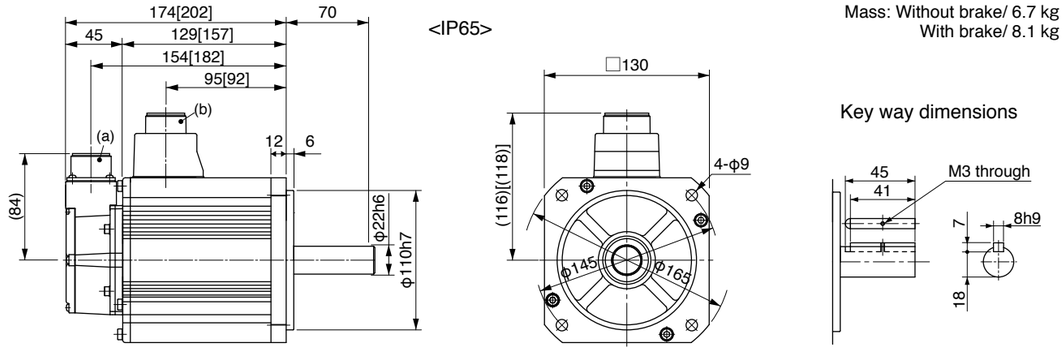


(a) Encoder connector
(b) Motor/Brake connector

* Figures in [ ] represent the dimensions with brake.

[Unit: mm]

**<Cautions>** Reduce the moment of inertia ratio if high speed response operation is required.
Dimensions are subject to change without notice. Contact us or a dealer for the latest information.
Read the Instruction Manual carefully and understand all precautions and remarks before using the products.

# 400 V MHME 1.5 kW [High inertia, Middle capacity]

## Specifications

| | | | AC400 V | |
|---|---|---|---|---|
| Motor model *1 | IP65 | | MHME154GC□ | MHME154SC□ |
| | IP67 | | MHME154G1□ | MHME154S1□ |
| Applicable driver *2 | Model No. | A5Ⅱ, A5 series | MDD◇T3420 | |
| | | A5ⅡE, A5E series | MDD◇T3420E | – |
| | Frame symbol | | D-frame | |
| Power supply capacity (kVA) | | | 2.3 | |
| Rated output (W) | | | 1500 | |
| Rated torque (N·m) | | | 7.16 | |
| Momentary Max. peak torque (N·m) | | | 21.5 | |
| Rated current (A(rms)) | | | 4.7 | |
| Max. current (A(o-p)) | | | 20 | |
| Regenerative brake frequency (times/min) Note)1 | Without option | | 22 | |
| | DV0PM20048 | | 130 | |
| Rated rotational speed (r/min) | | | 2000 | |
| Max. rotational speed (r/min) | | | 3000 | |
| Moment of inertia of rotor ($\times10^{-4}$ kg·m$^2$) | Without brake | | 37.1 | |
| | With brake | | 38.4 | |
| Recommended moment of inertia ratio of the load and the rotor Note)3 | | | 5 times or less | |
| Rotary encoder specifications Note)5 | | | 20-bit Incremental | 17-bit Absolute |
| | Resolution per single turn | | 1048576 | 131072 |

• **Brake specifications** (For details, refer to P.183)
(This brake will be released when it is energized.
Do not use this for braking the motor in motion.)

| | |
|---|---|
| Static friction torque (N·m) | 13.7 or more |
| Engaging time (ms) | 100 or less |
| Releasing time (ms) Note)4 | 50 or less |
| Exciting current (DC) (A) | 0.79±10 % |
| Releasing voltage (DC) (V) | 2 or more |
| Exciting voltage (DC) (V) | 24±2.4 |

• **Permissible load** (For details, refer to P.183)

| | | |
|---|---|---|
| During assembly | Radial load P-direction (N) | 980 |
| | Thrust load A-direction (N) | 588 |
| | Thrust load B-direction (N) | 686 |
| During operation | Radial load P-direction (N) | 490 |
| | Thrust load A, B-direction (N) | 196 |

• For details of Note 1 to Note 5, refer to P.182, P.183.
• Dimensions of Driver, refer to P.44.
*1 Motor specifications: □
*2 The product that the end of driver model designation has "E" is "Position control type". Detail of model designation, refer to P.16.
*3 ◇ in number of applicable driver represents the series. For more information about the part number, please refer to P.16.

## Torque characteristics (at AC400 V of power voltage <Dotted line represents the torque at 10 % less supply voltage.>)

With oil seal

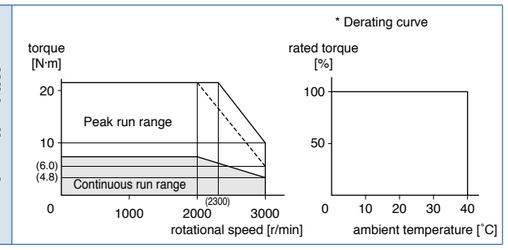


## Dimensions

(For IP67 motor, refer to P.140.)

Mass: Without brake/ 8.6 kg
With brake/ 10.1 kg

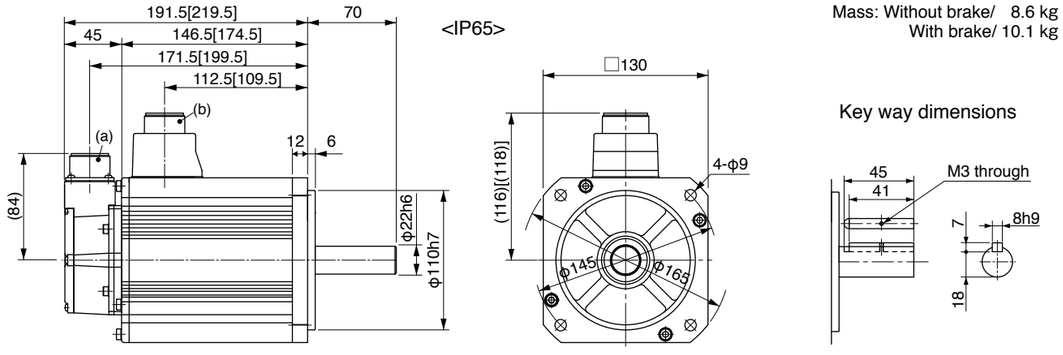


(a) Encoder connector
(b) Motor/Brake connector

* Figures in [ ] represent the dimensions with brake.

[Unit: mm]

**<Cautions>** Reduce the moment of inertia ratio if high speed response operation is required.
Dimensions are subject to change without notice. Contact us or a dealer for the latest information.
Read the Instruction Manual carefully and understand all precautions and remarks before using the products.





# 400 V MHME 2.0 kW [High inertia, Middle capacity]

## Specifications

| | | | AC400 V | |
|---|---|---|---|---|
| Motor model *1 | IP65 | | MHME204GC□ | MHME204SC□ |
| | IP67 | | MHME204G1□ | MHME204S1□ |
| Applicable driver *2 | Model No. | A5Ⅱ, A5 series | MED◇T4430 | |
| | | A5ⅡE, A5E series | MED◇T4430E | – |
| | Frame symbol | | E-frame | |
| Power supply capacity (kVA) | | | 3.3 | |
| Rated output (W) | | | 2000 | |
| Rated torque (N·m) | | | 9.55 | |
| Momentary Max. peak torque (N·m) | | | 28.6 | |
| Rated current (A(rms)) | | | 5.5 | |
| Max. current (A(o-p)) | | | 24 | |
| Regenerative brake frequency (times/min) Note)1 | Without option | | 45 | |
| | DV0PM20048 | | 142 | |
| Rated rotational speed (r/min) | | | 2000 | |
| Max. rotational speed (r/min) | | | 3000 | |
| Moment of inertia of rotor ($\times10^{-4}$ kg·m$^2$) | Without brake | | 57.8 | |
| | With brake | | 59.6 | |
| Recommended moment of inertia ratio of the load and the rotor Note)3 | | | 5 times or less | |
| Rotary encoder specifications Note)5 | | | 20-bit Incremental | 17-bit Absolute |
| | Resolution per single turn | | 1048576 | 131072 |

• **Brake specifications** (For details, refer to P.183)
(This brake will be released when it is energized.
Do not use this for braking the motor in motion.)

| | |
|---|---|
| Static friction torque (N·m) | 24.5 or more |
| Engaging time (ms) | 80 or less |
| Releasing time (ms) Note)4 | 25 or less |
| Exciting current (DC) (A) | 1.3±10 % |
| Releasing voltage (DC) (V) | 2 or more |
| Exciting voltage (DC) (V) | 24±2.4 |

• **Permissible load** (For details, refer to P.183)

| | | |
|---|---|---|
| During assembly | Radial load P-direction (N) | 1666 |
| | Thrust load A-direction (N) | 784 |
| | Thrust load B-direction (N) | 980 |
| During operation | Radial load P-direction (N) | 784 |
| | Thrust load A, B-direction (N) | 343 |

• For details of Note 1 to Note 5, refer to P.182, P.183.
• Dimensions of Driver, refer to P.45.
*1 Motor specifications: □
*2 The product that the end of driver model designation has "E" is "Position control type". Detail of model designation, refer to P.16.
*3 ◇ in number of applicable driver represents the series. For more information about the part number, please refer to P.16.

## Torque characteristics (at AC400 V of power voltage <Dotted line represents the torque at 10 % less supply voltage.>)

With oil seal

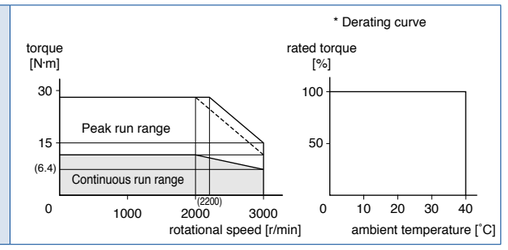


## Dimensions

(For IP67 motor, refer to P.140.)

Mass: Without brake/ 12.2 kg
With brake/ 15.5 kg

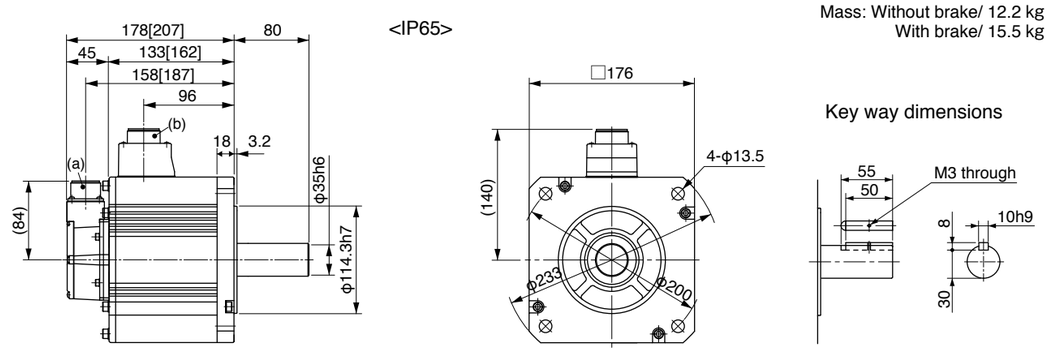


(a) Encoder connector
(b) Motor/Brake connector

* Figures in [ ] represent the dimensions with brake.

[Unit: mm]

**<Cautions>** Reduce the moment of inertia ratio if high speed response operation is required.
Dimensions are subject to change without notice. Contact us or a dealer for the latest information.
Read the Instruction Manual carefully and understand all precautions and remarks before using the products.

# 400 V MHME 3.0 kW [High inertia, Middle capacity]

## Specifications

| | | | AC400 V | |
|---|---|---|---|---|
| Motor model *1 | IP65 | | MHME304GC□ | MHME304SC□ |
| | IP67 | | MHME304G1□ | MHME304S1□ |
| Applicable driver *2 | Model No. | A5Ⅱ, A5 series | MFD◇T5440 | |
| | | A5ⅡE, A5E series | MFD◇T5440E | – |
| | Frame symbol | | F-frame | |
| Power supply capacity (kVA) | | | 4.5 | |
| Rated output (W) | | | 3000 | |
| Rated torque (N·m) | | | 14.3 | |
| Momentary Max. peak torque (N·m) | | | 43.0 | |
| Rated current (A(rms)) | | | 8.0 | |
| Max. current (A(o-p)) | | | 34 | |
| Regenerative brake frequency (times/min) Note)1 | Without option | | 19 | |
| | DV0PM20049×2 | | 142 | |
| Rated rotational speed (r/min) | | | 2000 | |
| Max. rotational speed (r/min) | | | 3000 | |
| Moment of inertia of rotor ($\times10^{-4}$ kg·m$^2$) | Without brake | | 90.5 | |
| | With brake | | 92.1 | |
| Recommended moment of inertia ratio of the load and the rotor Note)3 | | | 5 times or less | |
| Rotary encoder specifications Note)5 | | | 20-bit Incremental | 17-bit Absolute |
| | Resolution per single turn | | 1048576 | 131072 |

• **Brake specifications** (For details, refer to P.183)
(This brake will be released when it is energized.
Do not use this for braking the motor in motion.)

| | |
|---|---|
| Static friction torque (N·m) | 24.5 or more |
| Engaging time (ms) | 80 or less |
| Releasing time (ms) Note)4 | 25 or less |
| Exciting current (DC) (A) | 1.3±10 % |
| Releasing voltage (DC) (V) | 2 or more |
| Exciting voltage (DC) (V) | 24±2.4 |

• **Permissible load** (For details, refer to P.183)

| | | |
|---|---|---|
| During assembly | Radial load P-direction (N) | 1666 |
| | Thrust load A-direction (N) | 784 |
| | Thrust load B-direction (N) | 980 |
| During operation | Radial load P-direction (N) | 784 |
| | Thrust load A, B-direction (N) | 343 |

• For details of Note 1 to Note 5, refer to P.182, P.183.
• Dimensions of Driver, refer to P.45.
*1 Motor specifications: □
*2 The product that the end of driver model designation has "E" is "Position control type". Detail of model designation, refer to P.16.
*3 ◇ in number of applicable driver represents the series. For more information about the part number, please refer to P.16.

## Torque characteristics (at AC400 V of power voltage <Dotted line represents the torque at 10 % less supply voltage.>)

With oil seal

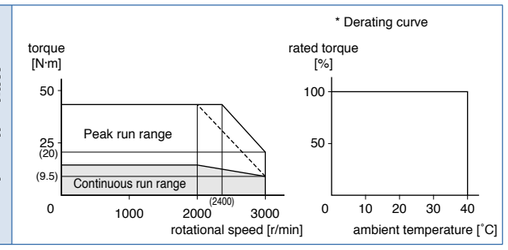


## Dimensions

(For IP67 motor, refer to P.140.)

Mass: Without brake/ 16.0 kg
With brake/ 19.2 kg

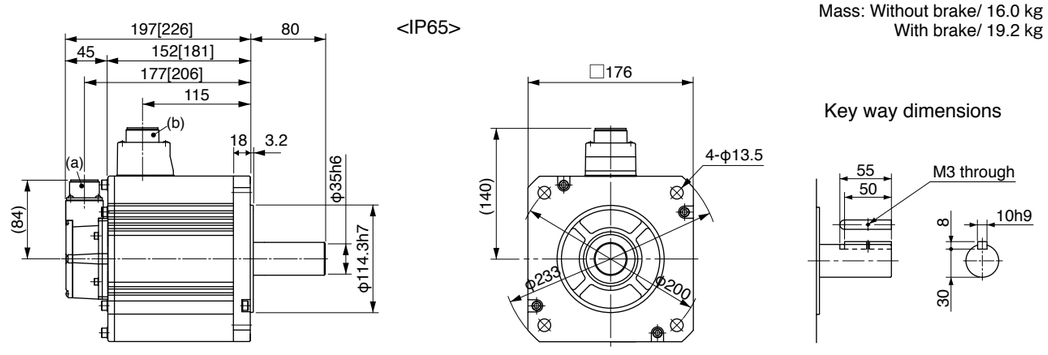


(a) Encoder connector
(b) Motor/Brake connector

* Figures in [ ] represent the dimensions with brake.

[Unit: mm]

**<Cautions>** Reduce the moment of inertia ratio if high speed response operation is required.
Dimensions are subject to change without notice. Contact us or a dealer for the latest information.
Read the Instruction Manual carefully and understand all precautions and remarks before using the products.





# 400 V MHME 4.0 kW [High inertia, Middle capacity]

## Specifications

| | | | AC400 V | |
|---|---|---|---|---|
| Motor model *1 | IP65 | | MHME404GC□ | MHME404SC□ |
| | IP67 | | MHME404G1□ | MHME404S1□ |
| Applicable driver *2 | Model No. | A5Ⅱ, A5 series | MFD◇TA464 | |
| | | A5ⅡE, A5E series | MFD◇TA464E | – |
| | Frame symbol | | F-frame | |
| Power supply capacity (kVA) | | | 6.8 | |
| Rated output (W) | | | 4000 | |
| Rated torque (N·m) | | | 19.1 | |
| Momentary Max. peak torque (N·m) | | | 57.3 | |
| Rated current (A(rms)) | | | 10.5 | |
| Max. current (A(o-p)) | | | 45 | |
| Regenerative brake frequency (times/min) Note)1 | Without option | | 17 | |
| | DV0PM20049×2 | | 125 | |
| Rated rotational speed (r/min) | | | 2000 | |
| Max. rotational speed (r/min) | | | 3000 | |
| Moment of inertia of rotor ($\times10^{-4}$ kg·m$^2$) | Without brake | | 112 | |
| | With brake | | 114 | |
| Recommended moment of inertia ratio of the load and the rotor Note)3 | | | 5 times or less | |
| Rotary encoder specifications Note)5 | | | 20-bit Incremental | 17-bit Absolute |
| | Resolution per single turn | | 1048576 | 131072 |

• **Brake specifications** (For details, refer to P.183)
(This brake will be released when it is energized.
Do not use this for braking the motor in motion.)

| | |
|---|---|
| Static friction torque (N·m) | 24.5 or more |
| Engaging time (ms) | 80 or less |
| Releasing time (ms) Note)4 | 25 or less |
| Exciting current (DC) (A) | 1.3±10 % |
| Releasing voltage (DC) (V) | 2 or more |
| Exciting voltage (DC) (V) | 24±2.4 |

• **Permissible load** (For details, refer to P.183)

| | | |
|---|---|---|
| During assembly | Radial load P-direction (N) | 1666 |
| | Thrust load A-direction (N) | 784 |
| | Thrust load B-direction (N) | 980 |
| During operation | Radial load P-direction (N) | 784 |
| | Thrust load A, B-direction (N) | 343 |

• For details of Note 1 to Note 5, refer to P.182, P.183.
• Dimensions of Driver, refer to P.45.
*1 Motor specifications: □
*2 The product that the end of driver model designation has "E" is "Position control type". Detail of model designation, refer to P.16.
*3 ◇ in number of applicable driver represents the series. For more information about the part number, please refer to P.16.

## Torque characteristics (at AC400 V of power voltage <Dotted line represents the torque at 10 % less supply voltage.>)

With oil seal

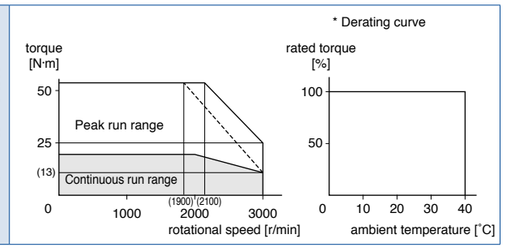


## Dimensions

(For IP67 motor, refer to P.140.)

Mass: Without brake/ 18.6 kg
With brake/ 21.8 kg

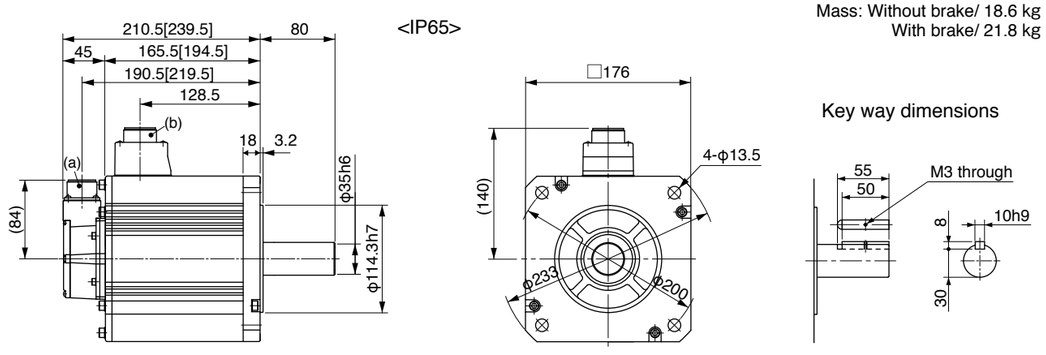


(a) Encoder connector
(b) Motor/Brake connector

* Figures in [ ] represent the dimensions with brake.

[Unit: mm]

**<Cautions>** Reduce the moment of inertia ratio if high speed response operation is required.
Dimensions are subject to change without notice. Contact us or a dealer for the latest information.
Read the Instruction Manual carefully and understand all precautions and remarks before using the products.

# 400 V MHME 5.0 kW [High inertia, Middle capacity]

## Specifications

| | | | AC400 V | |
|---|---|---|---|---|
| Motor model *1 | IP65 | | MHME504GC□ | MHME504SC□ |
| | IP67 | | MHME504G1□ | MHME504S1□ |
| Applicable driver *2 | Model No. | A5Ⅱ, A5 series | MFD◇TA464 | |
| | | A5ⅡE, A5E series | MFD◇TA464E | – |
| | Frame symbol | | F-frame | |
| Power supply capacity (kVA) | | | 7.5 | |
| Rated output (W) | | | 5000 | |
| Rated torque (N·m) | | | 23.9 | |
| Momentary Max. peak torque (N·m) | | | 71.6 | |
| Rated current (A(rms)) | | | 13.0 | |
| Max. current (A(o-p)) | | | 55 | |
| Regenerative brake frequency (times/min) Note)1 | Without option | | 10 | |
| | DV0PM20049×2 | | 76 | |
| Rated rotational speed (r/min) | | | 2000 | |
| Max. rotational speed (r/min) | | | 3000 | |
| Moment of inertia of rotor ($\times 10^{-4}$ kg·m$^2$) | Without brake | | 162 | |
| | With brake | | 164 | |
| Recommended moment of inertia ratio of the load and the rotor Note)3 | | | 5 times or less | |
| Rotary encoder specifications Note)5 | | | 20-bit Incremental | 17-bit Absolute |
| | Resolution per single turn | | 1048576 | 131072 |

• **Brake specifications** (For details, refer to P.183)
(This brake will be released when it is energized.
Do not use this for braking the motor in motion.)

| | |
|---|---|
| Static friction torque (N·m) | 24.5 or more |
| Engaging time (ms) | 80 or less |
| Releasing time (ms) Note)4 | 25 or less |
| Exciting current (DC) (A) | 1.3±10 % |
| Releasing voltage (DC) (V) | 2 or more |
| Exciting voltage (DC) (V) | 24±2.4 |

• **Permissible load** (For details, refer to P.183)

| | | |
|---|---|---|
| During assembly | Radial load P-direction (N) | 1666 |
| | Thrust load A-direction (N) | 784 |
| | Thrust load B-direction (N) | 980 |
| During operation | Radial load P-direction (N) | 784 |
| | Thrust load A, B-direction (N) | 343 |

• For details of Note 1 to Note 5, refer to P.182, P.183.
• Dimensions of Driver, refer to P.45.
*1 Motor specifications: □
*2 The product that the end of driver model designation has "E" is "Position control type". Detail of model designation, refer to P.16.
*3 ◇ in number of applicable driver represents the series. For more information about the part number, please refer to P.16.

## Torque characteristics (at AC400 V of power voltage <Dotted line represents the torque at 10 % less supply voltage.>)

With oil seal

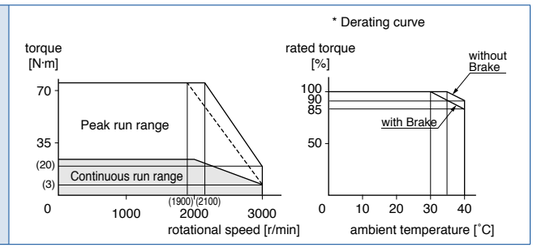


## Dimensions

(For IP67 motor, refer to P.140.)

Mass: Without brake/ 23.0 kg
With brake/ 26.2 kg

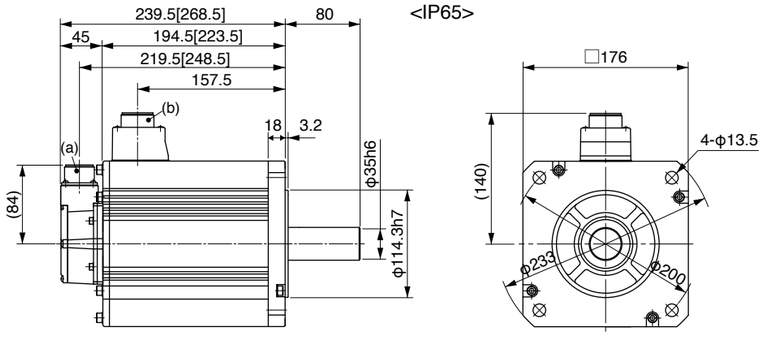


Key way dimensions

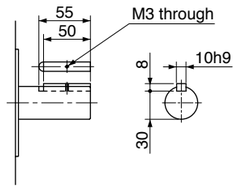


(a) Encoder connector
(b) Motor/Brake connector

* Figures in [ ] represent the dimensions with brake.

[Unit: mm]

**<Cautions>** Reduce the moment of inertia ratio if high speed response operation is required.
Dimensions are subject to change without notice. Contact us or a dealer for the latest information.
Read the Instruction Manual carefully and understand all precautions and remarks before using the products.





# 400 V MHME 7.5 kW [High inertia, Middle capacity]

## Specifications

| | | | AC400 V | |
|---|---|---|---|---|
| Motor model *1 | IP65 | | – | – |
| | IP67 | | MHME754G1□ | MHME754S1□ |
| Applicable driver *2 | Model No. | A5Ⅱ, A5 series | MGD◇TB4A2 | |
| | | A5ⅡE, A5E series | – | – |
| | Frame symbol | | G-frame | |
| Power supply capacity (kVA) | | | 9.0 | |
| Rated output (W) | | | 7500 | |
| Rated torque (N·m) | | | 47.8 | |
| Momentary Max. peak torque (N·m) | | | 119 | |
| Rated current (A(rms)) | | | 22.0 | |
| Max. current (A(o-p)) | | | 83 | |
| Regenerative brake frequency (times/min) Note)1 | Without option | | No limit Note)2 | |
| | DV0PM20049×3 | | No limit Note)2 | |
| Rated rotational speed (r/min) | | | 1500 | |
| Max. rotational speed (r/min) | | | 3000 | |
| Moment of inertia of rotor ($\times 10^{-4}$ kg·m$^2$) | Without brake | | 273 | |
| | With brake | | 279 | |
| Recommended moment of inertia ratio of the load and the rotor Note)3 | | | 5 times or less | |
| Rotary encoder specifications Note)5 | | | 20-bit Incremental | 17-bit Absolute |
| | Resolution per single turn | | 1048576 | 131072 |

• **Brake specifications** (For details, refer to P.183)
(This brake will be released when it is energized.
Do not use this for braking the motor in motion.)

| | |
|---|---|
| Static friction torque (N·m) | 58.8 or more |
| Engaging time (ms) | 150 or less |
| Releasing time (ms) Note)4 | 50 or less |
| Exciting current (DC) (A) | 1.4±10 % |
| Releasing voltage (DC) (V) | 2 or more |
| Exciting voltage (DC) (V) | 24±2.4 |

• **Permissible load** (For details, refer to P.183)

| | | |
|---|---|---|
| During assembly | Radial load P-direction (N) | 2058 |
| | Thrust load A-direction (N) | 980 |
| | Thrust load B-direction (N) | 1176 |
| During operation | Radial load P-direction (N) | 1176 |
| | Thrust load A, B-direction (N) | 490 |

• For details of Note 1 to Note 5, refer to P.182, P.183.
• Dimensions of Driver, refer to P.46.
*1 Motor specifications: □
*2 The product that the end of driver model designation has "E" is "Position control type". Detail of model designation, refer to P.16.
*3 ◇ in number of applicable driver represents the series. For more information about the part number, please refer to P.16.

## Torque characteristics (at AC400 V of power voltage <Dotted line represents the torque at 10 % less supply voltage.>)

With oil seal

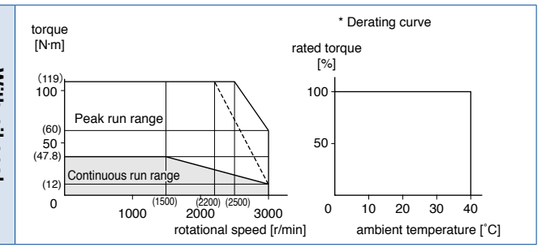


## Dimensions

Mass: Without brake/ 42.3 kg
With brake/ 46.2 kg

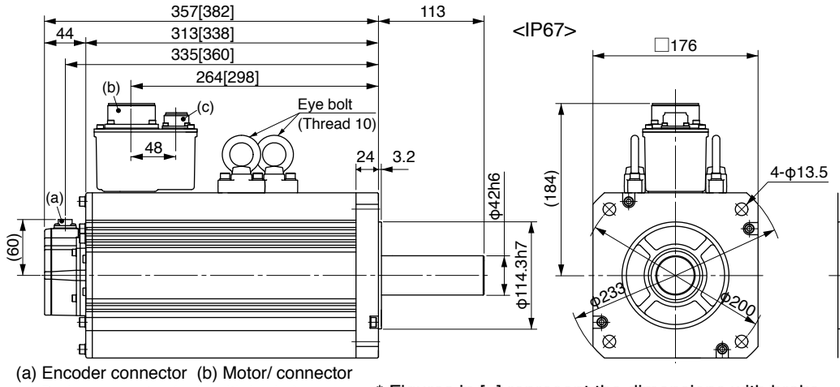


Key way dimensions

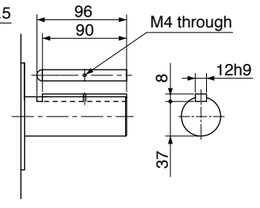


(a) Encoder connector (b) Motor/ connector
(c) Brake connector (only with brake)

* Figures in [ ] represent the dimensions with brake.

[Unit: mm]

**<Cautions>** Reduce the moment of inertia ratio if high speed response operation is required.
Dimensions are subject to change without notice. Contact us or a dealer for the latest information.
Read the Instruction Manual carefully and understand all precautions and remarks before using the products.

# IP67 motor (MSME 200 V/ 400 V type)

## • MSME084□1 *

[Unit: mm]

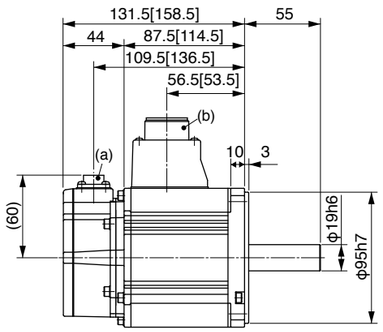


(a) Encoder connector
(b) Motor/Brake connector

* Figures in [ ] represent the dimensions with brake.

## • MSME10□□1 *

[Unit: mm]

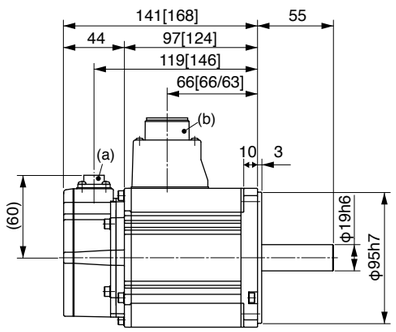


(a) Encoder connector (b) Motor/Brake connector

* Figures in [ ] represent the dimensions with brake.
If you find two figures in [ ] ,left figure is for 200 V and right figure is for 400 V.

## • MSME15□□1 *

[Unit: mm]

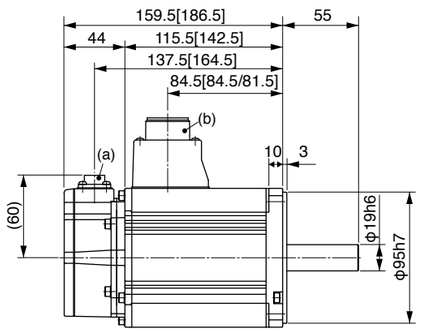


(a) Encoder connector (b) Motor/Brake connector

* Figures in [ ] represent the dimensions with brake.
If you find two figures in [ ] ,left figure is for 200 V and right figure is for 400 V.

## • MSME20□□1 *

[Unit: mm]

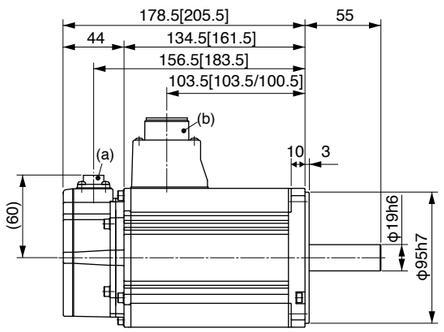


(a) Encoder connector (b) Motor/Brake connector

* Figures in [ ] represent the dimensions with brake.
If you find two figures in [ ] ,left figure is for 200 V and right figure is for 400 V.

## • MSME30□□1 *

[Unit: mm]

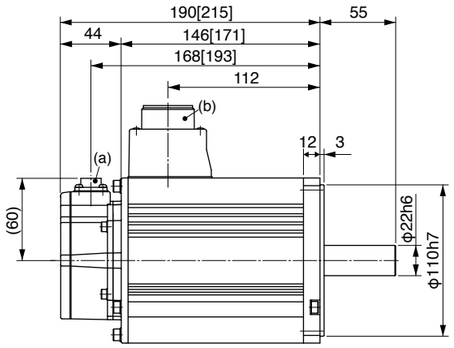


(a) Encoder connector
(b) Motor/Brake connector

* Figures in [ ] represent the dimensions with brake.

## • MSME40□□1 *

[Unit: mm]

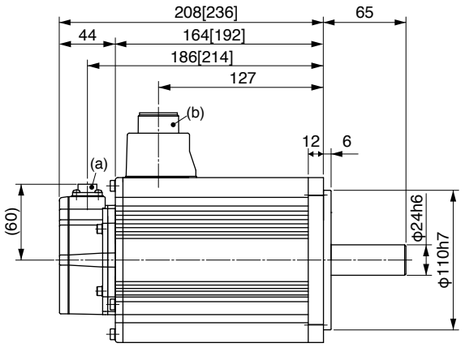


(a) Encoder connector
(b) Motor/Brake connector

* Figures in [ ] represent the dimensions with brake.

* For motor specifications, refer to IP65 motor page.





# IP67 motor (MSME 200 V/ 400 V type / MDME 200 V/ 400 V type)

## • MSME50□□1 *

[Unit: mm]

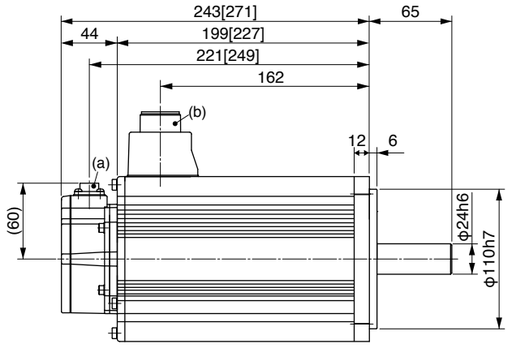


(a) Encoder connector
(b) Motor/Brake connector

* Figures in [ ] represent the dimensions with brake.

## • MDME044□1 *

[Unit: mm]

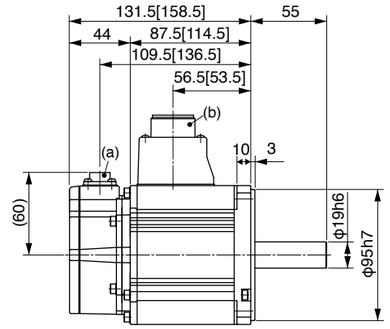


(a) Encoder connector
(b) Motor/Brake connector

* Figures in [ ] represent the dimensions with brake.

## • MDME064□1 *

[Unit: mm]

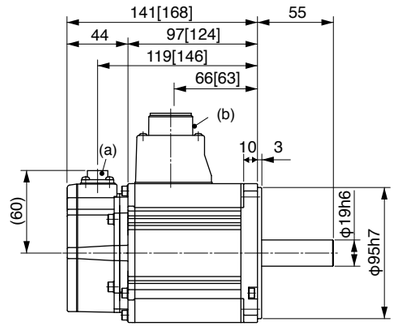


(a) Encoder connector
(b) Motor/Brake connector

* Figures in [ ] represent the dimensions with brake.

## • MDME10□□1 *

[Unit: mm]

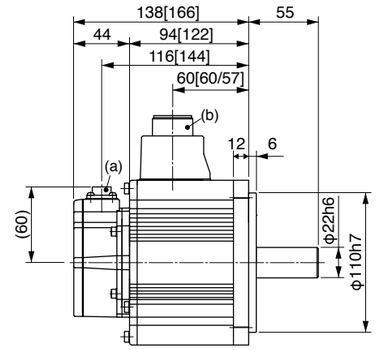


(a) Encoder connector (b) Motor/Brake connector

* Figures in [ ] represent the dimensions with brake.
If you find two figures in [ ] ,left figure is for 200 V and right figure is for 400 V.

## • MDME15□□1 *

[Unit: mm]

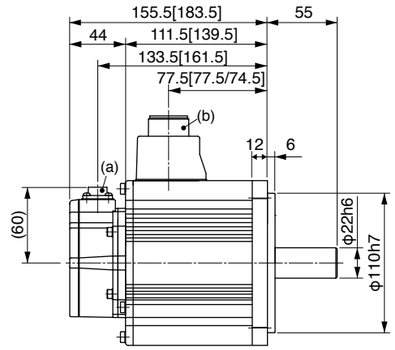


(a) Encoder connector (b) Motor/Brake connector

* Figures in [ ] represent the dimensions with brake.
If you find two figures in [ ] ,left figure is for 200 V and right figure is for 400 V.

## • MDME20□□1 *

[Unit: mm]

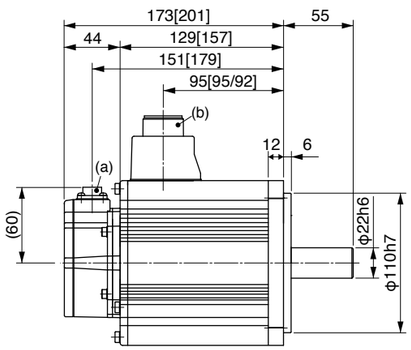


(a) Encoder connector (b) Motor/Brake connector

* Figures in [ ] represent the dimensions with brake.
If you find two figures in [ ] ,left figure is for 200 V and right figure is for 400 V.

* For motor specifications, refer to IP65 motor page.

# IP67 motor (MDME 200 V/ 400 V type / MGME 200 V/ 400 V type)

• **MDME30□□1＊** [Unit: mm]

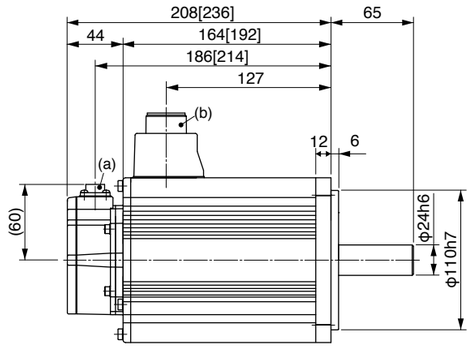


(a) Encoder connector
(b) Motor/Brake connector

* Figures in [ ] represent the dimensions with brake.

• **MDME40□□1＊** [Unit: mm]

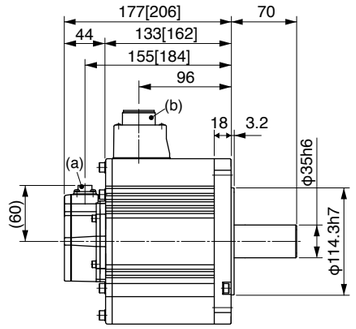


(a) Encoder connector
(b) Motor/Brake connector

* Figures in [ ] represent the dimensions with brake.

• **MDME50□□1＊** [Unit: mm]

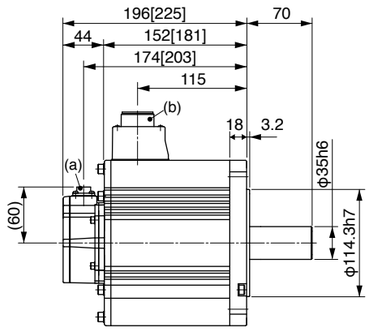


(a) Encoder connector
(b) Motor/Brake connector

* Figures in [ ] represent the dimensions with brake.

• **MGME09□□1＊** [Unit: mm]

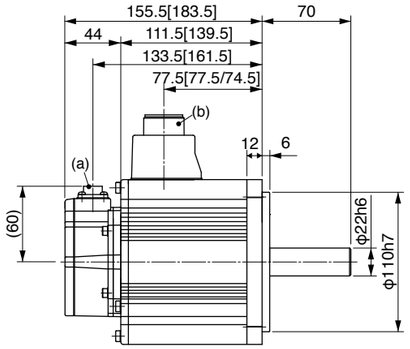


(a) Encoder connector (b) Motor/Brake connector

* Figures in [ ] represent the dimensions with brake.
If you find two figures in [ ] ,left figure is for 200 V and right figure is for 400 V.

• **MGME20□□1＊** [Unit: mm]

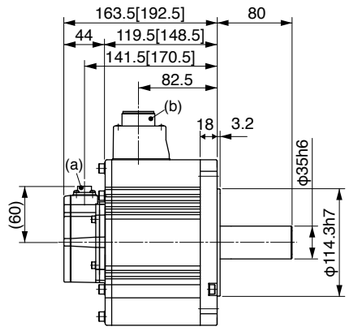


(a) Encoder connector
(b) Motor/Brake connector

* Figures in [ ] represent the dimensions with brake.

• **MGME30□□1＊** [Unit: mm]

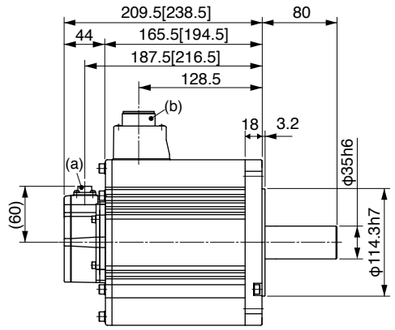


(a) Encoder connector
(b) Motor/Brake connector

* Figures in [ ] represent the dimensions with brake.

* For motor specifications, refer to IP65 motor page.





# IP67 motor (MHME 200 V/ 400 V type)

• **MHME10□□1＊** [Unit: mm]

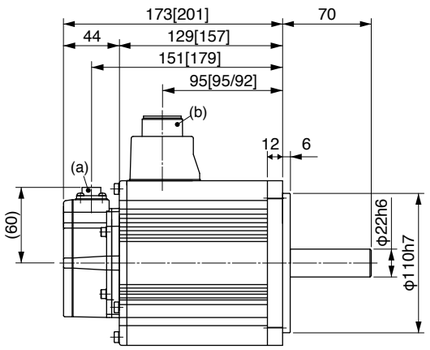


(a) Encoder connector (b) Motor/Brake connector

* Figures in [ ] represent the dimensions with brake.
If you find two figures in [ ] ,left figure is for 200 V and right figure is for 400 V.

• **MHME15□□1＊** [Unit: mm]

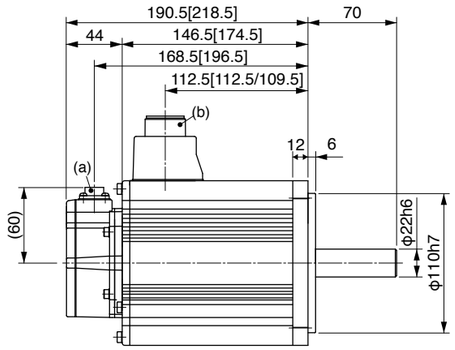


(a) Encoder connector (b) Motor/Brake connector

* Figures in [ ] represent the dimensions with brake.
If you find two figures in [ ] ,left figure is for 200 V and right figure is for 400 V.

• **MHME20□□1＊** [Unit: mm]

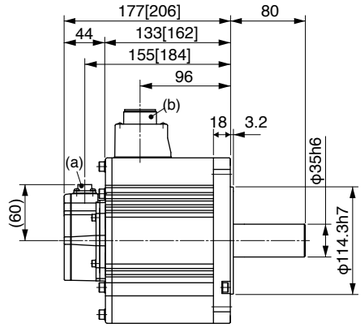


(a) Encoder connector
(b) Motor/Brake connector

* Figures in [ ] represent the dimensions with brake.

• **MHME30□□1＊** [Unit: mm]

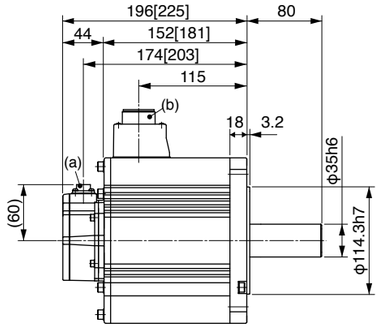


(a) Encoder connector
(b) Motor/Brake connector

* Figures in [ ] represent the dimensions with brake.

• **MHME40□□1＊** [Unit: mm]

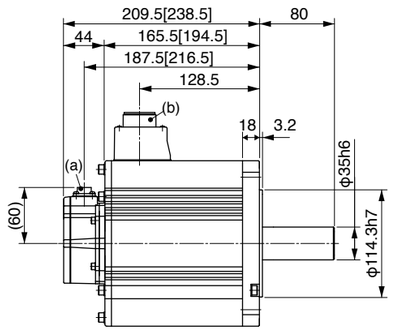


(a) Encoder connector
(b) Motor/Brake connector

* Figures in [ ] represent the dimensions with brake.

• **MHME50□□1＊** [Unit: mm]

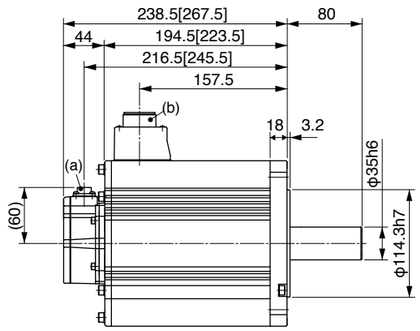


(a) Encoder connector
(b) Motor/Brake connector

* Figures in [ ] represent the dimensions with brake.

* For motor specifications, refer to IP65 motor page.

# Type and Specifications

## Motor Types with Gear Reducer

**MSME**
100 W to 750 W

**MSMD**
100 W to 750 W

**MHMD**
200 W to 750 W

| Reduction ratio | Motor output (W) | | | | Type of reducer |
|---|---|---|---|---|---|
| | 100 | 200 | 400 | 750 | |
| 1/5 | ● | ● | ● | ● | For high precision |
| 1/9 | ● | ● | ● | ● | |
| 1/15 | ● | ● | ● | ● | |
| 1/25 | ● | ● | ● | ● | |

* MHMD 100 W is not prepared.

Efficiency of the gear reducer show the following inclination in relation to output torque and rotational speed.

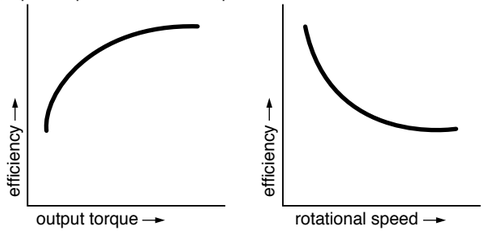


## Specifications of Motor with Gear Reducer

| Items | | Specifications |
|---|---|---|
| Gear reducer | Backlash | 3 minutes or smaller (initial value) at output shaft of the reducer |
| | Composition of gear | Planetary gear |
| | Gear efficiency | 65 % to 85 % |
| | Lubrication | Grease lubrication |
| | Rotational direction at output shaft | Same direction as the motor output shaft |
| | Mounting method | Flange mounting |
| | Permissible moment of inertia of the load (conversion to the motor shaft) | 10 times or smaller than rotor moment of inertia of the motor |
| | Protective structure | IP44 (at gear reducer) |
| Environment | Ambient temperature | 0 °C to 40 °C (free from condensation) |
| | Ambient humidity | 85 %RH (free from condensation) or less |
| | Vibration resistance | 49 m/s$^2$ or less (at motor frame) |
| | Impact resistance | 98 m/s$^2$ or less |





# Model Designation/ The Combination of the Driver and the Motor

* For combination of elements of model number, refer to Index.

## Model Designation

**M S M E 0 1 1 G 3 1 N**

**Motor rated output**

| Symbol | Specifications |
|---|---|
| 01 | 100 W |
| 02 | 200 W |
| 04 | 400 W |
| 08 | 750 W |

| Symbol | Type |
|---|---|
| MSMD | Low inertia 100 W to 750 W |
| MSME | Low inertia 100 W to 750 W |
| MHMD | High inertia 200 W to 750 W |

**Voltage specifications**

| Symbol | Rated output |
|---|---|
| 1 | 100 V |
| 2 | 200 V |

**Motor types with gear reducer**

| Symbol | Reduction ratio | Motor output (W) | | | | Type of reducer |
|---|---|---|---|---|---|---|
| | | 100 | 200 | 400 | 750 | |
| 1N | 1/5 | ● | ● | ● | ● | For high precision |
| 2N | 1/9 | ● | ● | ● | ● | |
| 3N | 1/15 | ● | ● | ● | ● | |
| 4N | 1/25 | ● | ● | ● | ● | |

* MHMD 100 W is not prepared.

**Motor structure**

| Symbol | Shaft | Holding brake | |
|---|---|---|---|
| | Key way | without | with |
| 3 | ● | ● | |
| 4 | ● | | ● |

Rotary encoder specifications

| Symbol | Format | Pulse counts | Resolution | Wire |
|---|---|---|---|---|
| G | Incremental | 20-bit | 1048576 | 5 |
| S | Absolute | 17-bit | 131072 | 7 |

* S: can be used in incremental.

## The Combination of the Driver and the Motor with gear reducer

| Motor output | 100 V | | 200 V | |
|---|---|---|---|---|
| | Part No. of motor with gear reducer | Single phase, 100 V Part No. of driver | Part No. of motor with gear reducer | Single/3-phase, 200 V Part No. of driver |
| 100 W | MSME011□□□N<br>MSMD011□□□N | MADHT1107<br>MADKT1107 | MSME012□□□N<br>MSMD012□□□N | MADHT1505<br>MADKT1505 |
| | | MADHT1107E<br>MADKT1107E | | MADHT1505E<br>MADKT1505E |
| 200 W | MSME021□□□N<br>MSMD021□□□N<br>MHMD021□□□N | MBDHT2110<br>MBDKT2110 | MSME022□□□N<br>MSMD022□□□N<br>MHMD022□□□N | MADHT1507<br>MADKT1507 |
| | | MBDHT2110E<br>MBDKT2110E | | MADHT1507E<br>MADKT1507E |
| 400 W | MSME041□□□N<br>MSMD041□□□N<br>MHMD041□□□N | MCDHT3120<br>MCDKT3120 | MSME042□□□N<br>MSMD042□□□N<br>MHMD042□□□N | MBDHT2510<br>MBDKT2510 |
| | | MCDHT3120E<br>MCDKT3120E | | MBDHT2510E<br>MBDKT2510E |
| 750 W | — | — | MSME082□□□N<br>MSMD082□□□N<br>MHMD082□□□N | MCDHT3520<br>MCDKT3520 |
| | | | | MCDHT3520E<br>MCDKT3520E |

* Motor specifications enter to □□□ of the motor model number. Refer to “Model designation”.

# Table of Motor Specifications

## Table of Motor Specifications

| | Model | Motor Output | Reduction ratio | Output | Rated speed | Max. speed | Rated torque | Peak max. torque | Moment of inertia (motor + reducer/ converted to motor shaft) | | Mass | | Permissible radial load | Permissible thrust load |
|---|---|---|---|---|---|---|---|---|---|---|---|---|---|---|
| | | | | | | | | | w/o brake | w/ brake | w/o brake | w/ brake | | |
| | | (W) | | (W) | (r/min) | (r/min) | (N·m) | (N·m) | J(×10⁻⁴kg·m²) | | (kg) | | (N) | (N) |
| MSME Low inertia | MSME01 □□□ 1N | 100 | 1/5 | 75 | 600 | 1200 | 1.18 | 3.72 | 0.091 | 0.094 | 1.0 | 1.2 | 490 | 245 |
| | MSME01 □□□ 2N | | 1/9 | 80 | 333 | 666 | 2.25 | 6.86 | 0.0853 | 0.0883 | 1.0 | 1.2 | 588 | 294 |
| | MSME01 □□□ 3N | | 1/15 | 80 | 200 | 400 | 3.72 | 11.4 | 0.086 | 0.089 | 1.15 | 1.35 | 784 | 392 |
| | MSME01 □□□ 4N | | 1/25 | 80 | 120 | 240 | 6.27 | 19.0 | 0.0885 | 0.0915 | 2.15 | 2.35 | 1670 | 833 |
| | MSME02 □□□ 1N | 200 | 1/5 | 170 | 600 | 1200 | 2.65 | 8.04 | 0.258 | 0.278 | 1.5 | 1.92 | 490 | 245 |
| | MSME02 □□□ 2N | | 1/9 | 132 | 333 | 666 | 3.72 | 11.3 | 0.408 | 0.428 | 2.48 | 2.9 | 1180 | 588 |
| | MSME02 □□□ 3N | | 1/15 | 132 | 200 | 400 | 6.27 | 18.8 | 0.44 | 0.46 | 2.88 | 3.3 | 1470 | 735 |
| | MSME02 □□□ 4N | | 1/25 | 140 | 120 | 240 | 11.1 | 33.3 | 0.428 | 0.448 | 2.88 | 3.3 | 1670 | 833 |
| | MSME04 □□□ 1N | 400 | 1/5 | 340 | 600 | 1200 | 5.39 | 16.2 | 0.623 | 0.643 | 2.9 | 3.3 | 980 | 490 |
| | MSME04 □□□ 2N | | 1/9 | 332 | 333 | 666 | 9.51 | 28.5 | 0.528 | 0.548 | 2.9 | 3.3 | 1180 | 588 |
| | MSME04 □□□ 3N | | 1/15 | 332 | 200 | 400 | 15.8 | 47.5 | 0.56 | 0.58 | 3.3 | 3.7 | 1470 | 735 |
| | MSME04 □□□ 4N | | 1/25 | 332 | 120 | 240 | 26.4 | 79.2 | 0.56 | 0.58 | 4.4 | 4.8 | 2060 | 1030 |
| | MSME082 □□ 1N | 750 | 1/5 | 672 | 600 | 1200 | 10.7 | 32.1 | 1.583 | 1.683 | 4.4 | 5.2 | 980 | 490 |
| | MSME082 □□ 2N | | 1/9 | 635 | 333 | 666 | 18.2 | 54.7 | 1.52 | 1.62 | 5.7 | 6.5 | 1470 | 735 |
| | MSME082 □□ 3N | | 1/15 | 635 | 200 | 400 | 30.4 | 91.2 | 1.57 | 1.67 | 6.1 | 6.9 | 1760 | 882 |
| | MSME082 □□ 4N | | 1/25 | 635 | 120 | 240 | 50.7 | 152 | 1.52 | 1.62 | 6.1 | 6.9 | 2650 | 1320 |
| MSMD Low inertia | MSMD01 □□□ 1N | 100 | 1/5 | 75 | 600 | 1000 | 1.18 | 3.72 | 0.091 | 0.094 | 1.02 | 1.23 | 490 | 245 |
| | MSMD01 □□□ 2N | | 1/9 | 80 | 333 | 555 | 2.25 | 6.86 | 0.0853 | 0.0883 | 1.02 | 1.23 | 588 | 294 |
| | MSMD01 □□□ 3N | | 1/15 | 80 | 200 | 333 | 3.72 | 11.4 | 0.086 | 0.089 | 1.17 | 1.38 | 784 | 392 |
| | MSMD01 □□□ 4N | | 1/25 | 80 | 120 | 200 | 6.27 | 19.0 | 0.0885 | 0.0915 | 2.17 | 2.38 | 1670 | 833 |
| | MSMD02 □□□ 1N | 200 | 1/5 | 170 | 600 | 1000 | 2.65 | 8.04 | 0.258 | 0.278 | 1.54 | 2.02 | 490 | 245 |
| | MSMD02 □□□ 2N | | 1/9 | 132 | 333 | 555 | 3.72 | 11.3 | 0.408 | 0.428 | 2.52 | 3 | 1180 | 588 |
| | MSMD02 □□□ 3N | | 1/15 | 132 | 200 | 333 | 6.27 | 18.8 | 0.44 | 0.46 | 2.92 | 3.4 | 1470 | 735 |
| | MSMD02 □□□ 4N | | 1/25 | 140 | 120 | 200 | 11.1 | 33.3 | 0.428 | 0.448 | 2.92 | 3.4 | 1670 | 833 |
| | MSMD04 □□□ 1N | 400 | 1/5 | 340 | 600 | 1000 | 5.39 | 16.2 | 0.623 | 0.643 | 2.9 | 3.4 | 980 | 490 |
| | MSMD04 □□□ 2N | | 1/9 | 332 | 333 | 555 | 9.51 | 28.5 | 0.528 | 0.548 | 2.9 | 3.4 | 1180 | 588 |
| | MSMD04 □□□ 3N | | 1/15 | 332 | 200 | 333 | 15.8 | 47.5 | 0.56 | 0.58 | 3.3 | 3.8 | 1470 | 735 |
| | MSMD04 □□□ 4N | | 1/25 | 332 | 120 | 200 | 26.4 | 79.2 | 0.56 | 0.58 | 4.4 | 4.9 | 2060 | 1030 |
| | MSMD082 □□ 1N | 750 | 1/5 | 672 | 600 | 900 | 10.7 | 32.1 | 1.583 | 1.683 | 4.4 | 5.2 | 980 | 490 |
| | MSMD082 □□ 2N | | 1/9 | 635 | 333 | 500 | 18.2 | 54.7 | 1.52 | 1.62 | 5.7 | 6.5 | 1470 | 735 |
| | MSMD082 □□ 3N | | 1/15 | 635 | 200 | 300 | 30.4 | 91.2 | 1.57 | 1.67 | 6.1 | 6.9 | 1760 | 882 |
| | MSMD082 □□ 4N | | 1/25 | 635 | 120 | 180 | 50.7 | 152 | 1.52 | 1.62 | 6.1 | 6.9 | 2650 | 1320 |
| MHMD High inertia | MHMD02 □□□ 1N | 200 | 1/5 | 170 | 600 | 1000 | 2.65 | 8.04 | 0.538 | 0.568 | 1.68 | 2.12 | 490 | 245 |
| | MHMD02 □□□ 2N | | 1/9 | 132 | 333 | 555 | 3.72 | 11.3 | 0.688 | 0.718 | 2.66 | 3.1 | 1180 | 588 |
| | MHMD02 □□□ 3N | | 1/15 | 132 | 200 | 333 | 6.27 | 18.8 | 0.72 | 0.75 | 3.06 | 3.5 | 1470 | 735 |
| | MHMD02 □□□ 4N | | 1/25 | 140 | 120 | 200 | 11.1 | 33.3 | 0.708 | 0.738 | 3.06 | 3.5 | 1670 | 833 |
| | MHMD04 □□□ 1N | 400 | 1/5 | 340 | 600 | 1000 | 5.39 | 16.2 | 1.033 | 1.063 | 3.1 | 3.5 | 980 | 490 |
| | MHMD04 □□□ 2N | | 1/9 | 332 | 333 | 555 | 9.51 | 28.5 | 0.938 | 0.968 | 3.1 | 3.5 | 1180 | 588 |
| | MHMD04 □□□ 3N | | 1/15 | 332 | 200 | 333 | 15.8 | 47.5 | 0.97 | 1.0 | 3.5 | 3.9 | 1470 | 735 |
| | MHMD04 □□□ 4N | | 1/25 | 332 | 120 | 200 | 26.4 | 79.2 | 0.97 | 1.0 | 4.6 | 5.0 | 2060 | 1030 |
| | MHMD082 □□ 1N | 750 | 1/5 | 672 | 600 | 900 | 10.7 | 32.1 | 2.223 | 2.323 | 4.6 | 5.4 | 980 | 490 |
| | MHMD082 □□ 2N | | 1/9 | 635 | 333 | 500 | 18.2 | 54.7 | 2.16 | 2.26 | 5.9 | 6.7 | 1470 | 735 |
| | MHMD082 □□ 3N | | 1/15 | 635 | 200 | 300 | 30.4 | 91.2 | 2.21 | 2.31 | 6.3 | 7.1 | 1760 | 882 |
| | MHMD082 □□ 4N | | 1/25 | 635 | 120 | 180 | 50.7 | 152 | 2.16 | 2.26 | 6.3 | 7.1 | 2650 | 1320 |

* Motor specifications enter to □□□ of the motor model number. Refer to “Model designation”.





# Torque Characteristics of Motor

## MSME series (100 W to 750 W)

| Supply voltage to driver | Reduction ratio / Motor output | 1/5 | 1/9 | 1/15 | 1/25 |
|---|---|---|---|---|---|
| 100 V | 100 W | MSME011□□1N 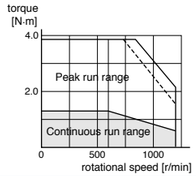 | MSME011□□2N 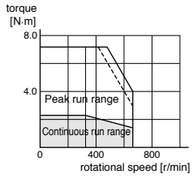 | MSME011□□3N 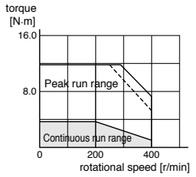 | MSME011□□4N 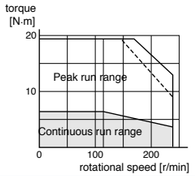 |
| | 200 W | MSME021□□1N 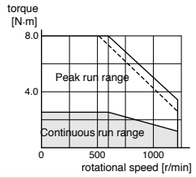 | MSME021□□2N 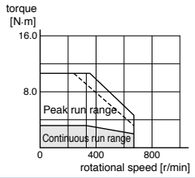 | MSME021□□3N 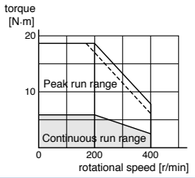 | MSME021□□4N 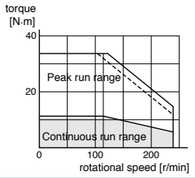 |
| | 400 W | MSME041□□1N 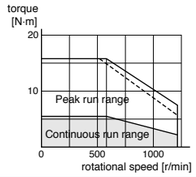 | MSME041□□2N 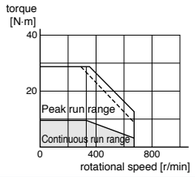 | MSME041□□3N 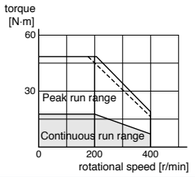 | MSME041□□4N 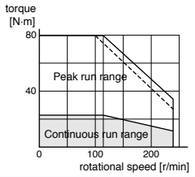 |
| 200 V | 100 W | MSME012□□1N 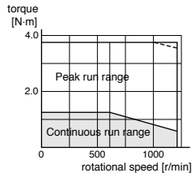 | MSME012□□2N 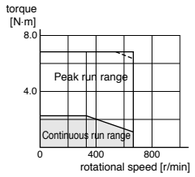 | MSME012□□3N 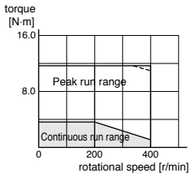 | MSME012□□4N 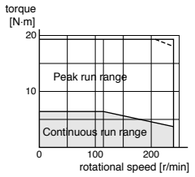 |
| | 200 W | MSME022□□1N 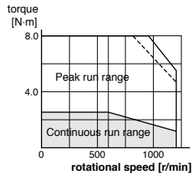 | MSME022□□2N 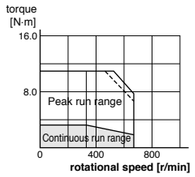 | MSME022□□3N 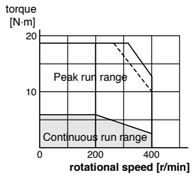 | MSME022□□4N 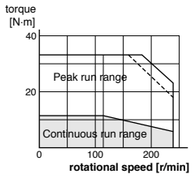 |
| | 400 W | MSME042□□1N 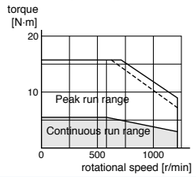 | MSME042□□2N 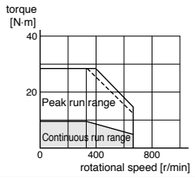 | MSME042□□3N 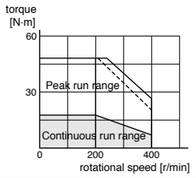 | MSME042□□4N 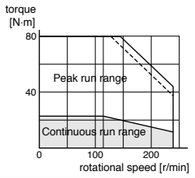 |
| | 750 W | MSME082□□1N 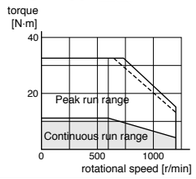 | MSME082□□2N 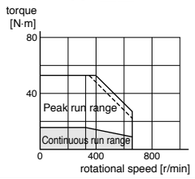 | MSME082□□3N 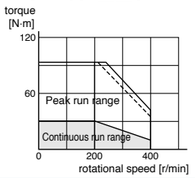 | MSME082□□4N 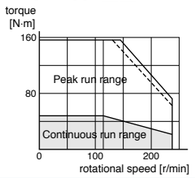 |

Dotted line represents the torque at 10 % less supply voltage.

# Torque Characteristics of Motor

## MSMD series (100 W to 750 W)

| Supply voltage to driver | Reduction ratio / Motor output | 1/5 | 1/9 | 1/15 | 1/25 |
|---|---|---|---|---|---|
| 100 V | 100 W | MSMD011□□1N 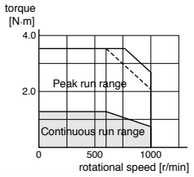 | MSMD011□□2N 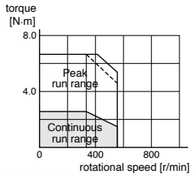 | MSMD011□□3N 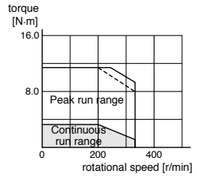 | MSMD011□□4N 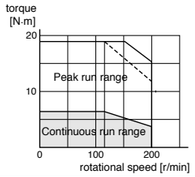 |
| | 200 W | MSMD021□□1N 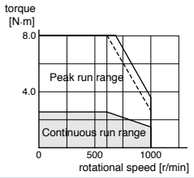 | MSMD021□□2N 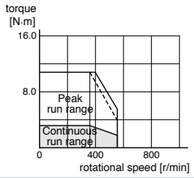 | MSMD021□□3N 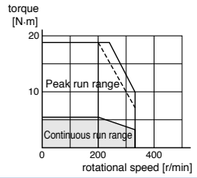 | MSMD021□□4N 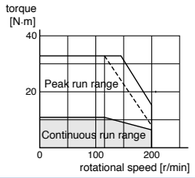 |
| | 400 W | MSMD041□□1N 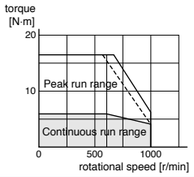 | MSMD041□□2N 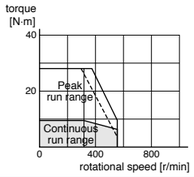 | MSMD041□□3N 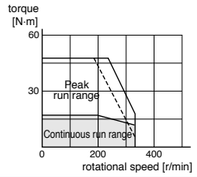 | MSMD041□□4N 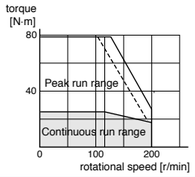 |
| 200 V | 100 W | MSMD012□□1N 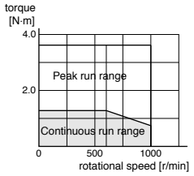 | MSMD012□□2N 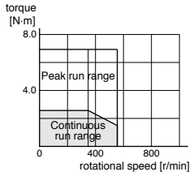 | MSMD012□□3N 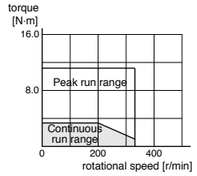 | MSMD012□□4N 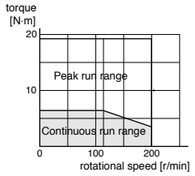 |
| | 200 W | MSMD022□□1N 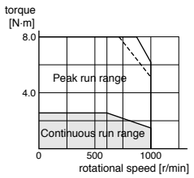 | MSMD022□□2N 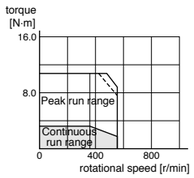 | MSMD022□□3N 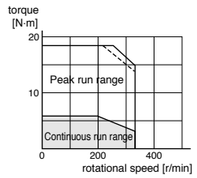 | MSMD022□□4N 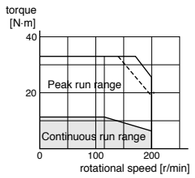 |
| | 400 W | MSMD042□□1N 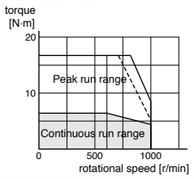 | MSMD042□□2N 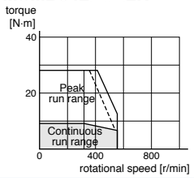 | MSMD042□□3N 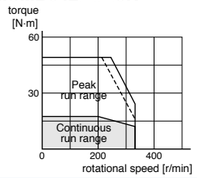 | MSMD042□□4N 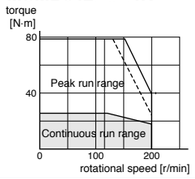 |
| | 750 W | MSMD082□□1N 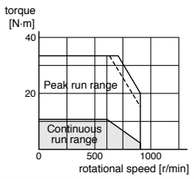 | MSMD082□□2N 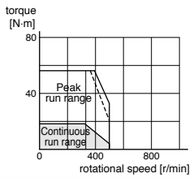 | MSMD082□□3N 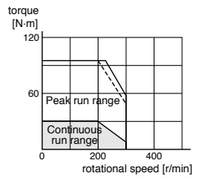 | MSMD082□□4N 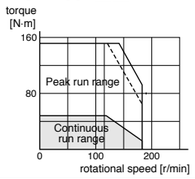 |

Dotted line represents the torque at 10 % less supply voltage.



## MHMD series (200 W to 750 W)

| Supply voltage to driver | Reduction ratio / Motor output | 1/5 | 1/9 | 1/15 | 1/25 |
|---|---|---|---|---|---|
| 100 V | 200 W | MHMD021□□1N 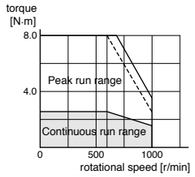 | MHMD021□□2N 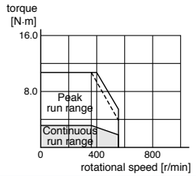 | MHMD021□□3N 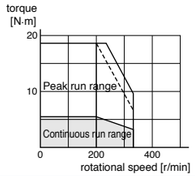 | MHMD021□□4N 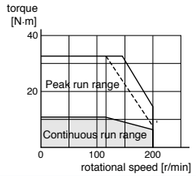 |
| | 400 W | MHMD041□□1N 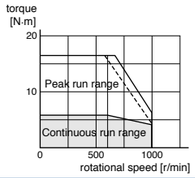 | MHMD041□□2N 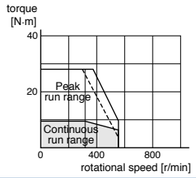 | MHMD041□□3N 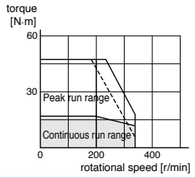 | MHMD041□□4N 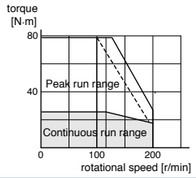 |
| 200 V | 200 W | MHMD022□□1N 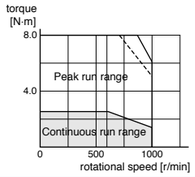 | MHMD022□□2N 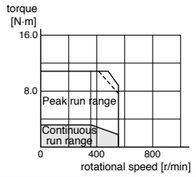 | MHMD022□□3N 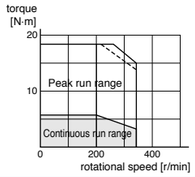 | MHMD022□□4N 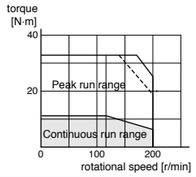 |
| | 400 W | MHMD042□□1N 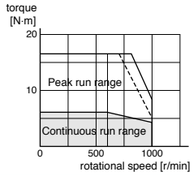 | MHMD042□□2N 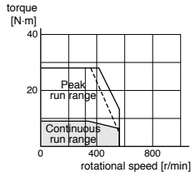 | MHMD042□□3N 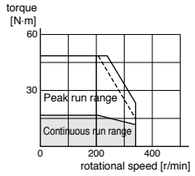 | MHMD042□□4N 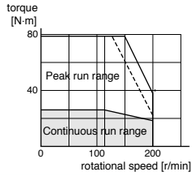 |
| | 750 W | MHMD082□□1N 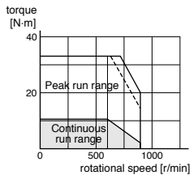 | MHMD082□□2N 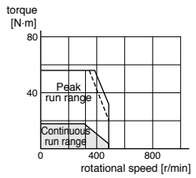 | MHMD082□□3N 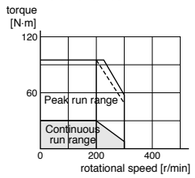 | MHMD082□□4N 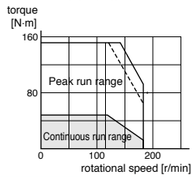 |

Dotted line represents the torque at 10 % less supply voltage.

# Dimensions of Motor

## MSME series

[Unit: mm]

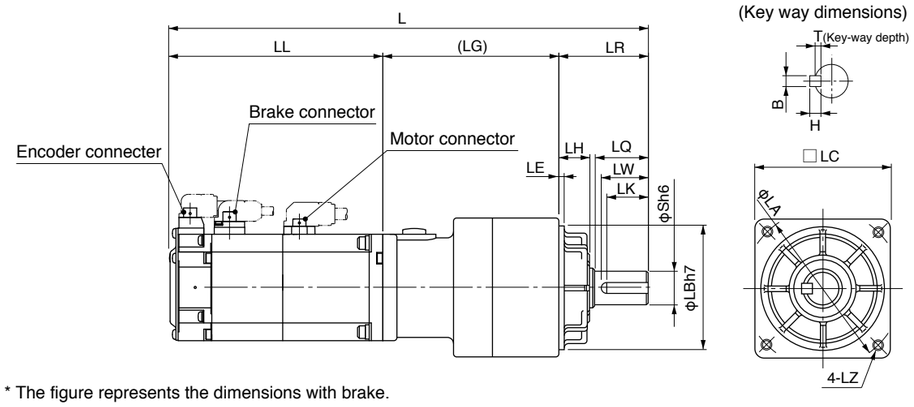


* The figure represents the dimensions with brake.

| Model | Motor output (W) | Reduction ratio | L | LL | LR | LQ | LC | LB | LA | S | LH | LZ | LW | (LG) | LE | Key way B×H×LK | T |
|---|---|---|---|---|---|---|---|---|---|---|---|---|---|---|---|---|---|
| MSME01□□□1N | 100 | 1/5 | 191.5 | 92 | 32 | 20 | 52 | 50 | 60 | 12 | 10 | M5 Depth 12 | 18 | 67.5 | 3 | 4×4×16 | 2.5 |
| | | | 221.5 | 122 | | | | | | | | | | | | | |
| MSME01□□□2N | | 1/9 | 191.5 | 92 | | | | | | | | | | | | | |
| | | | 221.5 | 122 | | | | | | | | | | | | | |
| MSME01□□□3N | | 1/15 | 202 | 92 | | | | | | | | | | 78 | | | |
| | | | 232 | 122 | | | | | | | | | | | | | |
| MSME01□□□4N | | 1/25 | 234 | 92 | 50 | 30 | 78 | 70 | 90 | 19 | 17 | M6 Depth 20 | 26 | 92 | | 6×6×22 | 3.5 |
| | | | 264 | 122 | | | | | | | | | | | | | |
| MSME02□□□1N | 200 | 1/5 | 184 | 79.5 | 32 | 20 | 52 | 50 | 60 | 12 | 10 | M5 Depth 12 | 18 | 72.5 | | 4×4×16 | 2.5 |
| | | | 220.5 | 116 | | | | | | | | | | | | | |
| MSME02□□□2N | | 1/9 | 219 | 79.5 | 50 | 30 | 78 | 70 | 90 | 19 | 17 | M6 Depth 20 | 26 | 89.5 | | 6×6×22 | 3.5 |
| | | | 255.5 | 116 | | | | | | | | | | | | | |
| MSME02□□□3N | | 1/15 | 229.5 | 79.5 | | | | | | | | | | 100 | | | |
| | | | 266 | 116 | | | | | | | | | | | | | |
| MSME02□□□4N | | 1/25 | 229.5 | 79.5 | | | | | | | | | | | | | |
| | | | 266 | 116 | | | | | | | | | | | | | |
| MSME04□□□1N | 400 | 1/5 | 238.5 | 99 | | | | | | | | | | 89.5 | | | |
| | | | 275 | 135.5 | | | | | | | | | | | | | |
| MSME04□□□2N | | 1/9 | 238.5 | 99 | | | | | | | | | | | | | |
| | | | 275 | 135.5 | | | | | | | | | | | | | |
| MSME04□□□3N | | 1/15 | 249 | 99 | | | | | | | | | | 100 | | | |
| | | | 285.5 | 135.5 | | | | | | | | | | | | | |
| MSME04□□□4N | | 1/25 | 264 | 99 | 61 | 40 | 98 | 90 | 115 | 24 | 18 | M8 Depth 20 | 35 | 104 | 5 | 8×7×30 | 4 |
| | | | 300.5 | 135.5 | | | | | | | | | | | | | |
| MSME082□□1N | 750 | 1/5 | 255.7 | 112.2 | 50 | 30 | 78 | 70 | 90 | 19 | 17 | M6 Depth 20 | 26 | 93.5 | 3 | 6×6×22 | 3.5 |
| | | | 291.7 | 148.2 | | | | | | | | | | | | | |
| MSME082□□2N | | 1/9 | 270.7 | 112.2 | 61 | 40 | 98 | 90 | 115 | 24 | 18 | M8 Depth 20 | 35 | 97.5 | 5 | 8×7×30 | 4 |
| | | | 306.7 | 148.2 | | | | | | | | | | | | | |
| MSME082□□3N | | 1/15 | 283.2 | 112.2 | | | | | | | | | | 110 | | | |
| | | | 319.2 | 148.2 | | | | | | | | | | | | | |
| MSME082□□4N | | 1/25 | 283.2 | 112.2 | | | | | | | | | | | | | |
| | | | 319.2 | 148.2 | | | | | | | | | | | | | |

Upper column: without brake
Lower column: with brake



## MSMD series

[Unit: mm]

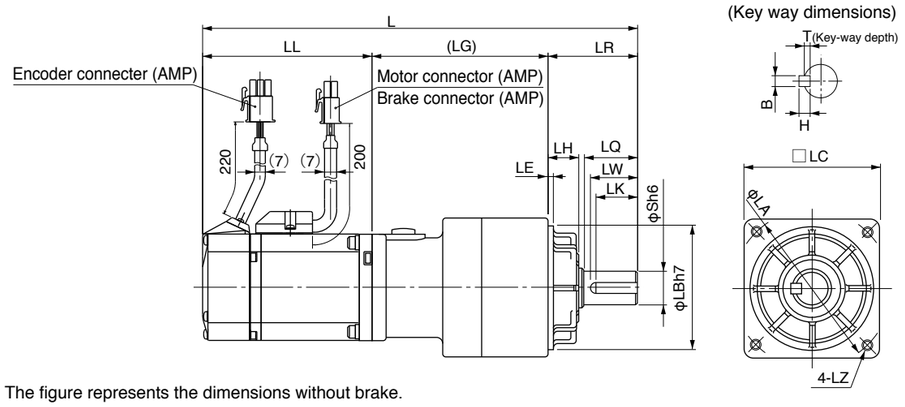


* The figure represents the dimensions without brake.

| Model | Motor output (W) | Reduction ratio | L | LL | LR | LQ | LC | LB | LA | S | LH | LZ | LW | (LG) | LE | Key way B×H×LK | T |
|---|---|---|---|---|---|---|---|---|---|---|---|---|---|---|---|---|---|
| MSMD01□□□1N | 100 | 1/5 | 191.5 | 92 | 32 | 20 | 52 | 50 | 60 | 12 | 10 | M5 Depth 12 | 18 | 67.5 | 3 | 4×4×16 | 2.5 |
| | | | 221.5 | 122 | | | | | | | | | | | | | |
| MSMD01□□□2N | | 1/9 | 191.5 | 92 | | | | | | | | | | | | | |
| | | | 221.5 | 122 | | | | | | | | | | | | | |
| MSMD01□□□3N | | 1/15 | 202 | 92 | | | | | | | | | | 78 | | | |
| | | | 232 | 122 | | | | | | | | | | | | | |
| MSMD01□□□4N | | 1/25 | 234 | 92 | 50 | 30 | 78 | 70 | 90 | 19 | 17 | M6 Depth 20 | 26 | 92 | | 6×6×22 | 3.5 |
| | | | 264 | 122 | | | | | | | | | | | | | |
| MSMD02□□□1N | 200 | 1/5 | 184 | 79.5 | 32 | 20 | 52 | 50 | 60 | 12 | 10 | M5 Depth 12 | 18 | 72.5 | | 4×4×16 | 2.5 |
| | | | 220.5 | 116 | | | | | | | | | | | | | |
| MSMD02□□□2N | | 1/9 | 219 | 79.5 | 50 | 30 | 78 | 70 | 90 | 19 | 17 | M6 Depth 20 | 26 | 89.5 | | 6×6×22 | 3.5 |
| | | | 255.5 | 116 | | | | | | | | | | | | | |
| MSMD02□□□3N | | 1/15 | 229.5 | 79.5 | | | | | | | | | | 100 | | | |
| | | | 266 | 116 | | | | | | | | | | | | | |
| MSMD02□□□4N | | 1/25 | 229.5 | 79.5 | | | | | | | | | | | | | |
| | | | 266 | 116 | | | | | | | | | | | | | |
| MSMD04□□□1N | 400 | 1/5 | 238.5 | 99 | | | | | | | | | | 89.5 | | | |
| | | | 275 | 135.5 | | | | | | | | | | | | | |
| MSMD04□□□2N | | 1/9 | 238.5 | 99 | | | | | | | | | | | | | |
| | | | 275 | 135.5 | | | | | | | | | | | | | |
| MSMD04□□□3N | | 1/15 | 249 | 99 | | | | | | | | | | 100 | | | |
| | | | 285.5 | 135.5 | | | | | | | | | | | | | |
| MSMD04□□□4N | | 1/25 | 264 | 99 | 61 | 40 | 98 | 90 | 115 | 24 | 18 | M8 Depth 20 | 35 | 104 | 5 | 8×7×30 | 4 |
| | | | 300.5 | 135.5 | | | | | | | | | | | | | |
| MSMD082□□1N | 750 | 1/5 | 255.7 | 112.2 | 50 | 30 | 78 | 70 | 90 | 19 | 17 | M6 Depth 20 | 26 | 93.5 | 3 | 6×6×22 | 3.5 |
| | | | 292.7 | 149.2 | | | | | | | | | | | | | |
| MSMD082□□2N | | 1/9 | 270.7 | 112.2 | 61 | 40 | 98 | 90 | 115 | 24 | 18 | M8 Depth 20 | 35 | 97.5 | 5 | 8×7×30 | 4 |
| | | | 307.7 | 149.2 | | | | | | | | | | | | | |
| MSMD082□□3N | | 1/15 | 283.2 | 112.2 | | | | | | | | | | 110 | | | |
| | | | 320.2 | 149.2 | | | | | | | | | | | | | |
| MSMD082□□4N | | 1/25 | 283.2 | 112.2 | | | | | | | | | | | | | |
| | | | 320.2 | 149.2 | | | | | | | | | | | | | |

Upper column: without brake
Lower column: with brake

# Dimensions of Motor

## MHMD series

[Unit: mm]

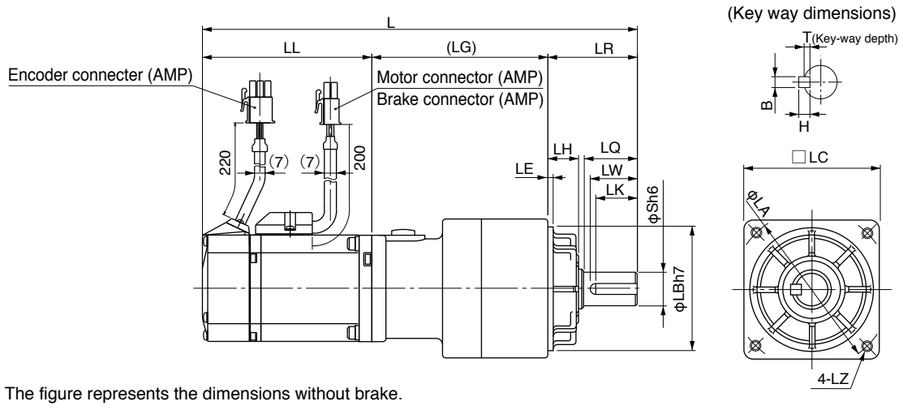


* The figure represents the dimensions without brake.

| Model | Motor output (W) | Reduction ratio | L | LL | LR | LQ | LC | LB | LA | S | LH | LZ | LW | (LG) | LE | Key way B×H×LK | T |
|---|---|---|---|---|---|---|---|---|---|---|---|---|---|---|---|---|---|
| MHMD02□□□1N | 200 | 1/5 | 203.5 | 99 | 32 | 20 | 52 | 50 | 60 | 12 | 10 | M5 Depth 12 | 18 | 72.5 | 3 | 4×4×16 | 2.5 |
| | | | 240 | 135.5 | | | | | | | | | | | | | |
| MHMD02□□□2N | | 1/9 | 238.5 | 99 | 50 | 30 | 78 | 70 | 90 | 19 | 17 | M6 Depth 20 | 26 | 89.5 | | 6×6×22 | 3.5 |
| | | | 275 | 135.5 | | | | | | | | | | | | | |
| MHMD02□□□3N | | 1/15 | 249 | 99 | | | | | | | | | | 100 | | | |
| | | | 285.5 | 135.5 | | | | | | | | | | | | | |
| MHMD02□□□4N | | 1/25 | 249 | 99 | | | | | | | | | | | | | |
| | | | 285.5 | 135.5 | | | | | | | | | | | | | |
| MHMD04□□□1N | 400 | 1/5 | 258 | 118.5 | | | | | | | | | | 89.5 | | | |
| | | | 294.5 | 155 | | | | | | | | | | | | | |
| MHMD04□□□2N | | 1/9 | 258 | 118.5 | | | | | | | | | | | | | |
| | | | 294.5 | 155 | | | | | | | | | | | | | |
| MHMD04□□□3N | | 1/15 | 268.5 | 118.5 | | | | | | | | | | 100 | | | |
| | | | 305 | 155 | | | | | | | | | | | | | |
| MHMD04□□□4N | | 1/25 | 283.5 | 118.5 | 61 | 40 | 98 | 90 | 115 | 24 | 18 | M8 Depth 20 | 35 | 104 | 5 | 8×7×30 | 4 |
| | | | 320 | 155 | | | | | | | | | | | | | |
| MHMD082□□1N | 750 | 1/5 | 270.7 | 127.2 | 50 | 30 | 78 | 70 | 90 | 19 | 17 | M6 Depth 20 | 26 | 93.5 | 3 | 6×6×22 | 3.5 |
| | | | 307.7 | 164.2 | | | | | | | | | | | | | |
| MHMD082□□2N | | 1/9 | 285.7 | 127.2 | 61 | 40 | 98 | 90 | 115 | 24 | 18 | M8 Depth 20 | 35 | 97.5 | 5 | 8×7×30 | 4 |
| | | | 322.7 | 164.2 | | | | | | | | | | | | | |
| MHMD082□□3N | | 1/15 | 298.2 | 127.2 | | | | | | | | | | 110 | | | |
| | | | 335.2 | 164.2 | | | | | | | | | | | | | |
| MHMD082□□4N | | 1/25 | 298.2 | 127.2 | | | | | | | | | | | | | |
| | | | 335.2 | 164.2 | | | | | | | | | | | | | |

Upper column: without brake
Lower column: with brake



MEMO

# Features/ Lineup

## Features

- Line-up IP65 motor: 200 W to 5.0 kW
- Max speed: 5000 r/min (MSMJ, MHMJ)
- Low inertia (MSME) to High inertia (MHME).
- 20-bit incremental encoder (1048576 pulse)
- 17-bit absolute encoder (131072 pulse).

**[Please note]**
Motors displayed at P.151 to P.181 are Special Order Product. Please contact us for more information.

## Motor Lineup

**Small capacity**

**MSMJ**
**Low inertia**
Max. speed : 5000 r/min
: 4500 r/min (750 W)
Rated speed : 3000 r/min
Rated output : 200 W to 750 W
Enclosure : IP65

**MHMJ**
**High inertia**
Max. speed : 5000 r/min
: 4500 r/min (750 W)
Rated speed : 3000 r/min
Rated output : 200 W to 750 W
Enclosure : IP65

**Middle capacity**

**MSME**
**Low inertia**
Max. speed : 5000 r/min
: 4500 r/min
(from 4.0 kW)
Rated speed : 3000 r/min
Rated output : 1.0 kW to 5.0 kW
Enclosure : IP65

**MDME**
**Middle inertia**
Max. speed : 3000 r/min
Rated speed : 2000 r/min
Rated output : IP65 1.0 kW to 5.0 kW
Enclosure : IP65

**MGME**
(Low speed/ High torque type)
**High inertia**
Max. speed : 2000 r/min
Rated speed : 1000 r/min
Rated output : IP65 0.9 kW to 3.0 kW
Enclosure : IP65

**MHME**
**High inertia**
Max. speed : 3000 r/min
Rated speed : 2000 r/min
Rated output : IP65 1.0 kW to 5.0 kW
Enclosure : IP65

### Special Order Product Motor Contents

**MSMJ (200 V)**
200 W to 750 W ..... P.155

**MSME (200 V)**
1.0 kW to 5.0 kW ..... P.158

**MDME (200 V)**
1.0 kW to 5.0 kW ..... P.164

**MGME (200 V)**
0.9 kW to 3.0 kW ..... P.170

**MHMJ (200 V)**
200 W to 750 W ..... P.173

**MHME (200 V)**
1.0 kW to 5.0 kW ..... P.176

**<Cautions>** Please avoid the motor, or equipment containing the motor to be distributed to Japan, or other regions through Japan.





# Model Designation

* For combination of elements of model number, refer to Index.

## Servo Motor

**M S M E 5 0 2 G C C M ∗**

**Special specifications**

**MSMJ, MHMJ**
**Special specifications**

**MSME, MDME, MGME, MHME**
M: Special Order Product

| Symbol | Type |
|---|---|
| MSMJ | Low inertia (200 W to 750 W) |
| MSME | Low inertia (1.0 kW to 5.0 kW) |
| MDME | Middle inertia (1.0 kW to 5.0 kW) |
| MGME | High inertia (0.9 kW to 3.0 kW) |
| MHMJ | High inertia (200 W to 750 W) |
| MHME | High inertia (1.0 kW to 5.0 kW) |

**Motor rated output**

| Symbol | Rated output |
|---|---|
| 02 | 200 W |
| 04 | 400 W |
| 08 | 750 W |
| 09 | 0.9 kW |
| 10 | 1.0 kW |
| 15 | 1.5 kW |
| 20 | 2.0 kW |
| 30 | 3.0 kW |
| 40 | 4.0 kW |
| 50 | 5.0 kW |

**Voltage specifications**
2: 200 V

**Rotary encoder specifications**

| Symbol | Format | Pulse counts | Resolution | Wires |
|---|---|---|---|---|
| G | Incremental | 20-bit | 1048576 | 5 |
| S | Absolute | 17-bit | 131072 | 7 |

* S: can be used in incremental.

**<Cautions>**
Please avoid the motor, or equipment containing the motor to be distributed to Japan, or other regions through Japan.

**Motor specifications**
**MSMJ, MHMJ**

| Symbol | Shaft | | Holding brake | | Oil seal | |
|---|---|---|---|---|---|---|
| | Round | Key-way, center tap | without | with | without | with |
| A | ● | | ● | | ● | |
| B | ● | | | ● | ● | |
| C | ● | | ● | | | ● |
| D | ● | | | ● | | ● |
| S | | ● | ● | | ● | |
| T | | ● | | ● | ● | |
| U | | ● | ● | | | ● |
| V | | ● | | ● | | ● |

**MSME, MDME, MGME, MHME**

| Symbol | Shaft | | Holding brake | | Oil seal | |
|---|---|---|---|---|---|---|
| | Round | Key-way | without | with | without | with |
| C | ● | | ● | | | ● |
| D | ● | | | ● | | ● |
| G | | ● | ● | | | ● |
| H | | ● | | ● | | ● |

**Design order**

| Symbol | Specifications |
|---|---|
| C | IP65 motor (MSME, MDME, MGME, MHME) |
| 1 | IP65 motor (MSMJ, MHMJ) |

## Servo Driver

**Speed, Position, Torque, Full-closed type** **M A D K T 1 5 0 5 ∗ ∗ ∗** — **Special specifications**

**Position control type** **M A D K T 1 5 0 5 E ∗ ∗** — **Special specifications**

**Only position control**

**Frame symbol ***

| Symbol | Frame |
|---|---|
| MAD | Frame A |
| MBD | Frame B |
| MCD | Frame C |
| MDD | Frame D |
| MED | Frame E |
| MFD | Frame F |

**Series**

| Symbol | Velocity, Position, Torque, Full-Closed type | Position control type |
|---|---|---|
| K | A5Ⅱ series | A5ⅡE series |

**Supply voltage specifications**

| Symbol | Specifications |
|---|---|
| 3 | 3-phase, 200 V |
| 5 | Single/3-phase, 200 V |

**Power device Max. current rating**

| Symbol | Current rating |
|---|---|
| T1 | 10 A |
| T2 | 15 A |
| T3 | 30 A |
| T5 | 50 A |
| T7 | 75 A |
| TA | 100 A |
| TB | 150 A |

**Current detector current rating**

| Symbol | Specifications |
|---|---|
| 07 | 7.5 A |
| 10 | 10 A |
| 20 | 20 A |
| 30 | 30 A |
| 40 | 40 A |
| 64 | 64 A |
| 90 | 90 A |
| A2 | 120 A |

# Table of Part Numbers and Options: 0.2 kW to 5.0 kW

| Motor | | | | | | Driver | | | Power capacity (at rated load) (kVA) | Optional parts | | | | | | | | |
|---|---|---|---|---|---|---|---|---|---|---|---|---|---|---|---|---|---|---|
| Motor series | | Power supply | Output (W) | Part No. Note) 1 | Rating/ Spec. (page) | A5Ⅱ series Part No. (Speed, Position, Torque, Full-Closed type) | A5ⅡE series Part No. (Position control type) Note) 2 | Frame | | Encoder Cable: 20-bit Incremental Note) 3 | Encoder Cable: 17-bit Absolute Note) 2,3,7 | | Motor Cable: without Brake Note) 3 | Motor Cable: with Brake Note) 3 | Brake Cable Note) 3 | External Regenerative Resistor | Reactor (Single phase / 3-phase) | Noise Filter (Single phase / 3-phase) |
| Low inertia | MSMJ (Leadwire type) 3000 r/min | Single phase/ 3-phase 200 V | 200 | MSMJ022 □ 1 ＊ | 155 | MADKT1507 | MADKT1507E | A-frame | Approx. 0.5 | MFECA 0**0EAM | MFECA 0**0EAE Note) 4 | | MFMCA 0**0EED | | MFMCB 0**0GET | DV0P4283 | DV0P227 / DV0P220 | DV0P4170 / DV0PM20042 |
| | | | 400 | MSMJ042 □ 1 ＊ | 156 | MBDKT2510 | MBDKT2510E | B-frame | Approx. 0.9 | | | | | | | | DV0P228 / DV0P220 | |
| | | | 750 | MSMJ082 □ 1 ＊ | 157 | MCDKT3520 | MCDKT3520E | C-frame | Approx. 1.3 | | | | | | | | | DV0PM20042 |
| | MSME 3000 r/min | | 1000 | MSME102 □ C ＊ M | 158 | MDDKT5540 | MDDKT5540E | D-frame | Approx. 1.8 | MFECA 0**0ESD | MFECA 0**0ESE | | MFMCD 0**2ECD | MFMCA 0**2FCD | — | DV0P4284 | DV0P228 / DV0P222 | DV0P4220 |
| | | | 1500 | MSME152 □ C ＊ M | 159 | MDDKT5540 | MDDKT5540E | | Approx. 2.3 | | | | | | | | DV0PM20047 / DV0P222 | |
| | | 3-phase 200 V | 2000 | MSME202 □ C ＊ M | 160 | MEDKT7364 | MEDKT7364E | E-frame | Approx. 3.3 | | | | | | | DV0P4285 Note) 5 | DV0P223 | DV0PM20043 |
| | | | 3000 | MSME302 □ C ＊ M | 161 | MFDKTA390 | MFDKTA390E | F-frame | Approx. 4.5 | | | | MFMCA 0**3ECT | MFMCA 0**3FCT | | DV0P4285 ×2 in parallel | DV0P224 | DV0P3410 |
| | | | 4000 | MSME402 □ C ＊ M | 162 | MFDKTB3A2 | MFDKTB3A2E | | Approx. 6 | | | | | | | | DV0P225 | |
| | | | 5000 | MSME502 □ C ＊ M | 163 | MFDKTB3A2 | MFDKTB3A2E | | Approx. 7.5 | | | | | | | | — Note) 6 | |
| Middle inertia | MDME 2000 r/min | Single phase/ 3-phase 200 V | 1000 | MDME102 □ C ＊ M | 164 | MDDKT3530 | MDDKT3530E | D-frame | Approx. 1.8 | | | | MFMCD 0**2ECD | MFMCA 0**2FCD | — | DV0P4284 | DV0P228 / DV0P222 | DV0P4220 |
| | | | 1500 | MDME152 □ C ＊ M | 165 | MDDKT5540 | MDDKT5540E | | Approx. 2.3 | | | | | | | | DV0PM20047 / DV0P222 | |
| | | 3-phase 200 V | 2000 | MDME202 □ C ＊ M | 166 | MEDKT7364 | MEDKT7364E | E-frame | Approx. 3.3 | | | | | | | DV0P4285 Note) 5 | DV0P223 | DV0PM20043 |
| | | | 3000 | MDME302 □ C ＊ M | 167 | MFDKTA390 | MFDKTA390E | F-frame | Approx. 4.5 | | | | MFMCA 0**3ECT | MFMCA 0**3FCT | | DV0P4285 ×2 in parallel | DV0P224 | DV0P3410 |
| | | | 4000 | MDME402 □ C ＊ M | 168 | MFDKTB3A2 | MFDKTB3A2E | | Approx. 6 | | | | | | | | DV0P225 | |
| | | | 5000 | MDME502 □ C ＊ M | 169 | MFDKTB3A2 | MFDKTB3A2E | | Approx. 7.5 | | | | | | | | — Note) 6 | |
| High inertia | MGME (Low speed/ High torque type) 1000 r/min | Single phase/ 3-phase 200 V | 900 | MGME092 □ C ＊ M | 170 | MDDKT5540 | MDDKT5540E | D-frame | Approx. 1.8 | | | | MFMCD 0**2ECD | MFMCA **2FCD | | DV0P4284 | DV0P228 / DV0P221 | DV0P4220 |
| | | 3-phase 200 V | 2000 | MGME202 □ C ＊ M | 171 | MFDKTA390 | MFDKTA390E | F-frame | Approx. 3.8 | | | | MFMCA 0**3ECT | MFMCA 0**3FCT | | DV0P4285 ×2 in parallel | DV0P223 | DV0P3410 |
| | | | 3000 | MGME302 □ C ＊ M | 172 | MFDKTB3A2 | MFDKTB3A2E | | Approx. 4.5 | | | | | | | | DV0P224 | |
| | MHMJ (Leadwire type) 3000 r/min | Single phase/ 3-phase 200 V | 200 | MHMJ022 □ 1 ＊ | 173 | MADKT1507 | MADKT1507E | A-frame | Approx. 0.5 | MFECA 0**0EAM | MFECA 0**0EAE Note) 4 | | MFMCA 0**0EED | | MFMCB 0**0GET | DV0P4283 | DV0P227 / DV0P220 | DV0P4170 / DV0PM20042 |
| | | | 400 | MHMJ042 □ 1 ＊ | 174 | MBDKT2510 | MBDKT2510E | B-frame | Approx. 0.9 | | | | | | | | DV0P228 / DV0P220 | |
| | | | 750 | MHMJ082 □ 1 ＊ | 175 | MCDKT3520 | MCDKT3520E | C-frame | Approx. 1.3 | | | | | | | | | DV0PM20042 |
| | MHME 2000 r/min | | 1000 | MHME102 □ C ＊ M | 176 | MDDKT3530 | MDDKT3530E | D-frame | Approx. 1.8 | MFECA 0**0ESD | MFECA 0**0ESE | | MFMCD 0**2ECD | MFMCA 0**2FCD | — | DV0P4284 | DV0P228 / DV0P222 | DV0P4220 |
| | | | 1500 | MHME152 □ C ＊ M | 177 | MDDKT5540 | MDDKT5540E | | Approx. 2.3 | | | | | | | | DV0PM20047 / DV0P222 | |
| | | 3-phase 200 V | 2000 | MHME202 □ C ＊ M | 178 | MEDKT7364 | MEDKT7364E | E-frame | Approx. 3.3 | | | | MFMCE 0**2ECD | MFMCE 0**2FCD | | DV0P4285 Note) 5 | DV0P223 | DV0PM20043 |
| | | | 3000 | MHME302 □ C ＊ M | 179 | MFDKTA390 | MFDKTA390E | F-frame | Approx. 4.5 | | | | MFMCA 0**3ECT | MFMCA 0**3FCT | | DV0P4285 ×2 in parallel | DV0P224 | DV0P3410 |
| | | | 4000 | MHME402 □ C ＊ M | 180 | MFDKTB3A2 | MFDKTB3A2E | | Approx. 6 | | | | | | | | DV0P225 | |
| | | | 5000 | MHME502 □ C ＊ M | 181 | MFDKTB3A2 | MFDKTB3A2E | | Approx. 7.5 | | | | | | | | — Note) 6 | |

Note) 1 Rotary encoder specifications: □ Motor specification: ＊ (refer to P.152)
Note) 2 Because A5ⅡE series drivers (dedicated for position control) do not support the 17-bit absolute specification, only 20-bit incremental type can be used in combination.
Note) 3 Cable length: ** (03: 3 m, 05: 5 m, 10: 10 m, 20: 20 m), (Example. 3 m: MFECA0030EAM)
Note) 4 When you use a 17-bit absolute encoder as an incremental encoder, please use the encoder cable MFECA0**0EAD.
Note) 5 Other combinations exist, and refer to P.210 for details.
Note) 6 Reactor should be prepared by the user.

**<Cautions>** Please avoid the motor, or equipment containing the motor to be distributed to Japan, or other regions through Japan.



Note) 7 Please note that a battery is not supplied together with 17-bit absolute encoder cable (with battery box).
Please buy the battery part number "DV0P2990" separately.

**・Options**

| Title | | | Part No. | Page |
|---|---|---|---|---|
| Interface Cable | | | DV0P4360 | 197 |
| Interface Conversion Cable | | | DV0P4120 | |
| | | | DV0P4121 | |
| | | | DV0P4130 | |
| | | | DV0P4131 | |
| | | | DV0P4132 | |
| Connector Kit for Power Supply Input Connection | A-frame to D-frame | Single row type | DV0PM20032 | 200 |
| | | Double row type | DV0PM20033 | |
| | E-frame | | DV0PM20044 | |
| Connector Kit for Motor Connection | A-frame to D-frame | | DV0PM20034 | 201 |
| | E-frame | | DV0PM20046 | |
| Connector Kit for Regenerative Resistor | E-frame | | DV0PM20045 | |
| Connector Kit for Motor/Encoder Connection | | | DV0P4290 | 202 |
| | | | DV0P4310 | 204 |
| | | | DV0P4320 | |
| | | | DV0P4330 | 205 |
| | | | DV0P4340 | |
| | | | DV0P4380 | 202 |
| Connector Kit | RS485, RS232 | | DV0PM20024 | 198 |
| | Safety | | DV0PM20025 | |
| | Interface | | DV0P4350 | |
| | External Scale | | DV0PM20026 | 199 |
| | Encoder | | DV0PM20010 | |
| | Analog Monitor Signal | | DV0PM20031 | |
| Battery For Absolute Encoder | | | DV0P2990 | 207 |
| Battery Box Note) 7 | | | DV0P4430 | |
| Mounting Bracket | A-frame | | DV0PM20027 | 208 |
| | B-frame | | DV0PM20028 | |
| | C-frame | | DV0PM20029 | |
| | D-frame | | DV0PM20030 | |
| Encoder Cable | without Battery Box | | MFECA0**0EAD | 188 |
| | | | MFECA0**0EAM | |
| | | | MFECA0**0ESD | 189 |
| | with Battery Box Note) 7 | | MFECA0**0EAE | 188 |
| | | | MFECA0**0ESE | 190 |
| Motor Cable | without Brake | | MFMCA0**0EED | 191 |
| | | | MFMCD0**2ECD | 192 |
| | | | MFMCE0**2ECD | |
| | | | MFMCA0**3ECT | 193 |
| | with Brake | | MFMCA0**2FCD | 194 |
| | | | MFMCA0**3FCT | 195 |
| Brake Cable | | | MFMCB0**0GET | 196 |
| External Regenerative Resistor | A-frame | | DV0P4283 | 210 |
| | B-frame | | | |
| | C-frame | | | |
| | D-frame | | DV0P4284 | |
| | E-frame | | DV0P4285 | |
| | F-frame | | | |
| Reactor | DV0P220, DV0P221, DV0P222, DV0P223, DV0P224, DV0P225, DV0P227, DV0P228, DV0PM20047 | | | 209 |
| Noise Filter | DV0P4170, DV0PM20042 DV0P4220, DV0PM20043 | | | 250 |
| | DV0P3410 | | | 251 |
| Surge Absorber | Single phase | | DV0P4190 | 253 |
| | 3-phase | | DV0P1450 | |
| Noise Filter for Signal Lines | | | DV0P1460 | 254 |

**<Cautions>** Please avoid the motor, or equipment containing the motor to be distributed to Japan, or other regions through Japan.

Special Order Product

# 200 V MSMJ 200 W [Low inertia, Small capacity]

• Please contact us for more information.

## Specifications

| | | | AC200 V | |
|---|---|---|---|---|
| Motor model *1 | IP65 | | MSMJ022G1□ | MSMJ022S1□ |
| | IP67 | | – | – |
| Applicable driver *2 | Model No. | A5Ⅱ series | MADKT1507 | |
| | | A5ⅡE series | MADKT1507E | – |
| | Frame symbol | | A-frame | |
| Power supply capacity (kVA) | | | 0.5 | |
| Rated output (W) | | | 200 | |
| Rated torque (N·m) | | | 0.64 | |
| Momentary Max. peak torque (N·m) | | | 1.91 | |
| Rated current (A(rms)) | | | 1.6 | |
| Max. current (A(o-p)) | | | 6.9 | |
| Regenerative brake frequency (times/min) Note)1 | Without option | | No limit Note)2 | |
| | DV0P4283 | | No limit Note)2 | |
| Rated rotational speed (r/min) | | | 3000 | |
| Max. rotational speed (r/min) | | | 5000 | |
| Moment of inertia of rotor ($\times 10^{-4}$ kg·m$^2$) | Without brake | | 0.14 | |
| | With brake | | 0.16 | |
| Recommended moment of inertia ratio of the load and the rotor Note)3 | | | 30 times or less | |
| Rotary encoder specifications Note)5 | | | 20-bit Incremental | 17-bit Absolute |
| | Resolution per single turn | | 1048576 | 131072 |

• **Brake specifications** (For details, refer to P.183)
(This brake will be released when it is energized. Do not use this for braking the motor in motion.)

| | |
|---|---|
| Static friction torque (N·m) | 1.27 or more |
| Engaging time (ms) | 50 or less |
| Releasing time (ms) Note)4 | 15 or less |
| Exciting current (DC) (A) | 0.36 |
| Releasing voltage (DC) (V) | 1 or more |
| Exciting voltage (DC) (V) | 24±1.2 |

• **Permissible load** (For details, refer to P.183)

| | | |
|---|---|---|
| During assembly | Radial load P-direction (N) | 392 |
| | Thrust load A-direction (N) | 147 |
| | Thrust load B-direction (N) | 196 |
| During operation | Radial load P-direction (N) | 245 |
| | Thrust load A, B-direction (N) | 98 |

• For details of Note 1 to Note 5, refer to P.182, P.183.
• Dimensions of Driver, refer to P.42.
*1 Motor specifications: □
*2 The product that the end of driver model designation has "E" is "Position control type". Detail of model designation, refer to P.152.

## Torque characteristics (at AC200 V of power voltage <Dotted line represents the torque at 10 % less supply voltage.>)

Without oil seal

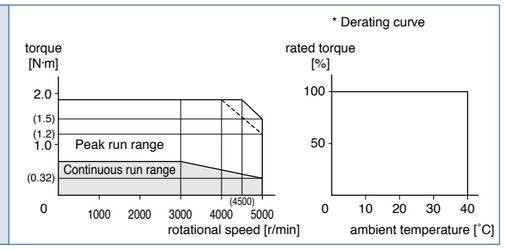


With oil seal

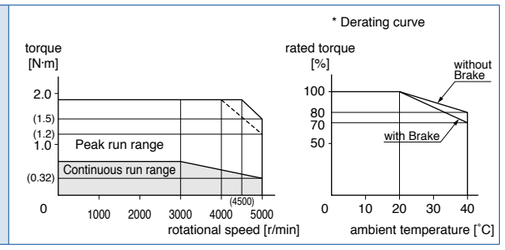


## Dimensions

Mass: Without brake/ 0.82 kg
With brake/ 1.3 kg

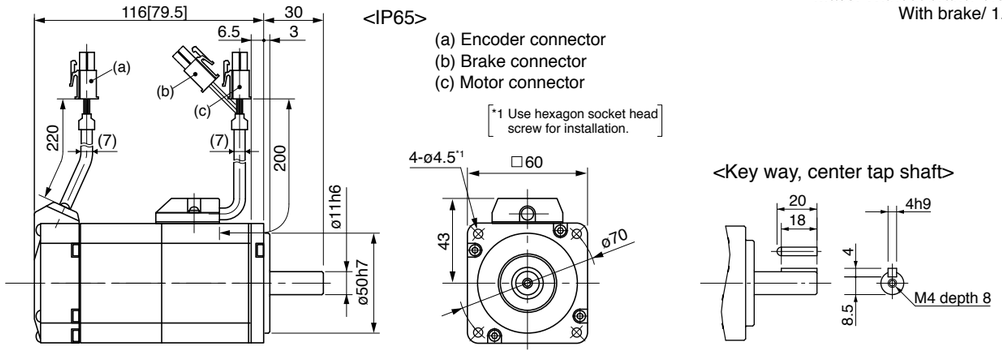


* Figures in [ ] represent the dimensions without brake.

[Unit: mm]

**<Cautions>** Reduce the moment of inertia ratio if high speed response operation is required.
Dimensions are subject to change without notice. Contact us or a dealer for the latest information.
Read the Instruction Manual carefully and understand all precautions and remarks before using the products.
Please avoid the motor, or equipment containing the motor to be distributed to Japan, or other regions through Japan.



Special Order Product

# 200 V MSMJ 400 W [Low inertia, Small capacity]



• Please contact us for more information.

## Specifications

| | | | AC200 V | |
|---|---|---|---|---|
| Motor model *1 | IP65 | | MSMJ042G1□ | MSMJ042S1□ |
| | IP67 | | – | – |
| Applicable driver *2 | Model No. | A5Ⅱ series | MBDKT2510 | |
| | | A5ⅡE series | MBDKT2510E | – |
| | Frame symbol | | B-frame | |
| Power supply capacity (kVA) | | | 0.9 | |
| Rated output (W) | | | 400 | |
| Rated torque (N·m) | | | 1.3 | |
| Momentary Max. peak torque (N·m) | | | 3.8 | |
| Rated current (A(rms)) | | | 2.6 | |
| Max. current (A(o-p)) | | | 11.0 | |
| Regenerative brake frequency (times/min) Note)1 | Without option | | No limit Note)2 | |
| | DV0P4283 | | No limit Note)2 | |
| Rated rotational speed (r/min) | | | 3000 | |
| Max. rotational speed (r/min) | | | 5000 | |
| Moment of inertia of rotor ($\times 10^{-4}$ kg·m$^2$) | Without brake | | 0.26 | |
| | With brake | | 0.28 | |
| Recommended moment of inertia ratio of the load and the rotor Note)3 | | | 30 times or less | |
| Rotary encoder specifications Note)5 | | | 20-bit Incremental | 17-bit Absolute |
| | Resolution per single turn | | 1048576 | 131072 |

• **Brake specifications** (For details, refer to P.183)
(This brake will be released when it is energized. Do not use this for braking the motor in motion.)

| | |
|---|---|
| Static friction torque (N·m) | 1.27 or more |
| Engaging time (ms) | 50 or less |
| Releasing time (ms) Note)4 | 15 or less |
| Exciting current (DC) (A) | 0.36 |
| Releasing voltage (DC) (V) | 1 or more |
| Exciting voltage (DC) (V) | 24±1.2 |

• **Permissible load** (For details, refer to P.183)

| | | |
|---|---|---|
| During assembly | Radial load P-direction (N) | 392 |
| | Thrust load A-direction (N) | 147 |
| | Thrust load B-direction (N) | 196 |
| During operation | Radial load P-direction (N) | 245 |
| | Thrust load A, B-direction (N) | 98 |

• For details of Note 1 to Note 5, refer to P.182, P.183.
• Dimensions of Driver, refer to P.42.
*1 Motor specifications: □
*2 The product that the end of driver model designation has "E" is "Position control type". Detail of model designation, refer to P.152.

## Torque characteristics (at AC200 V of power voltage <Dotted line represents the torque at 10 % less supply voltage.>)

Without oil seal

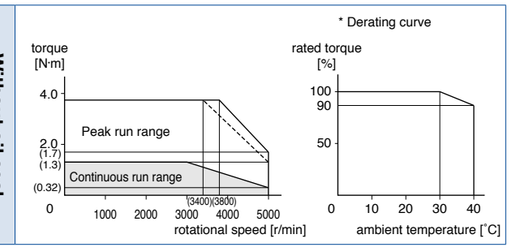


With oil seal

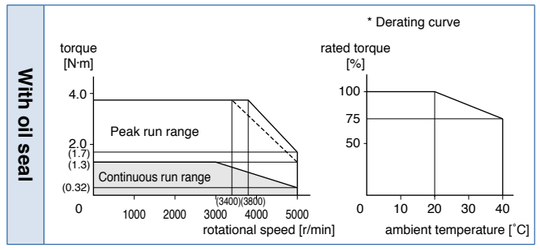


## Dimensions

Mass: Without brake/ 1.2 kg
With brake/ 1.7 kg

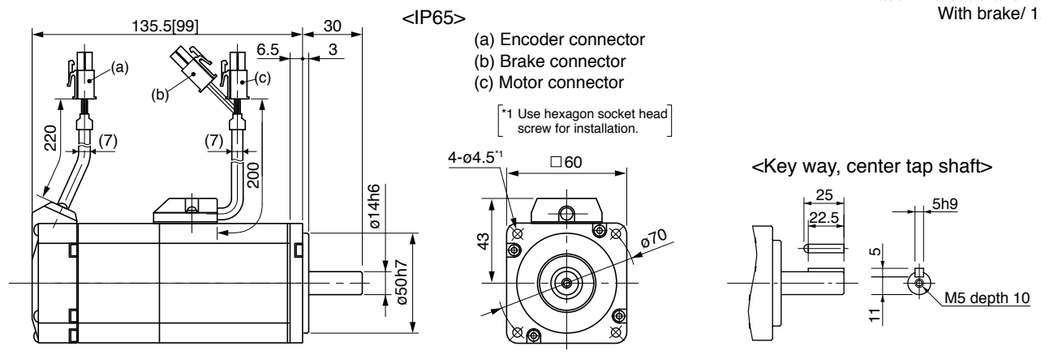


* Figures in [ ] represent the dimensions without brake.

[Unit: mm]

**<Cautions>** Reduce the moment of inertia ratio if high speed response operation is required.
Dimensions are subject to change without notice. Contact us or a dealer for the latest information.
Read the Instruction Manual carefully and understand all precautions and remarks before using the products.
Please avoid the motor, or equipment containing the motor to be distributed to Japan, or other regions through Japan.

Special Order Product

# 200 V MSMJ 750 W [Low inertia, Small capacity]

• Please contact us for more information.

## Specifications

| | | | AC200 V | |
|---|---|---|---|---|
| Motor model *1 | IP65 | | MSMJ082G1□ | MSMJ082S1□ |
| | IP67 | | – | – |
| Applicable driver *2 | Model No. | A5Ⅱ series | MCDKT3520 | |
| | | A5ⅡE series | MCDKT3520E | – |
| | Frame symbol | | C-frame | |
| Power supply capacity (kVA) | | | 1.3 | |
| Rated output (W) | | | 750 | |
| Rated torque (N·m) | | | 2.4 | |
| Momentary Max. peak torque (N·m) | | | 7.1 | |
| Rated current (A(rms)) | | | 4.0 | |
| Max. current (A(o-p)) | | | 17.0 | |
| Regenerative brake frequency (times/min) Note)1 | Without option | | No limit Note)2 | |
| | DV0P4283 | | No limit Note)2 | |
| Rated rotational speed (r/min) | | | 3000 | |
| Max. rotational speed (r/min) | | | 4500 | |
| Moment of inertia of rotor ($\times 10^{-4}$ kg·m$^2$) | Without brake | | 0.87 | |
| | With brake | | 0.97 | |
| Recommended moment of inertia ratio of the load and the rotor Note)3 | | | 20 times or less | |
| Rotary encoder specifications Note)5 | | | 20-bit Incremental | 17-bit Absolute |
| | Resolution per single turn | | 1048576 | 131072 |

• **Brake specifications** (For details, refer to P.183)
(This brake will be released when it is energized. Do not use this for braking the motor in motion.)

| | |
|---|---|
| Static friction torque (N·m) | 2.45 or more |
| Engaging time (ms) | 70 or less |
| Releasing time (ms) Note)4 | 20 or less |
| Exciting current (DC) (A) | 0.42 |
| Releasing voltage (DC) (V) | 1 or more |
| Exciting voltage (DC) (V) | 24±1.2 |

• **Permissible load** (For details, refer to P.183)

| | | |
|---|---|---|
| During assembly | Radial load P-direction (N) | 686 |
| | Thrust load A-direction (N) | 294 |
| | Thrust load B-direction (N) | 392 |
| During operation | Radial load P-direction (N) | 392 |
| | Thrust load A, B-direction (N) | 147 |

• For details of Note 1 to Note 5, refer to P.182, P.183.
• Dimensions of Driver, refer to P.43.
*1 Motor specifications: □
*2 The product that the end of driver model designation has "E" is "Position control type". Detail of model designation, refer to P.152.

## Torque characteristics (at AC200 V of power voltage <Dotted line represents the torque at 10 % less supply voltage.>)

Without oil seal

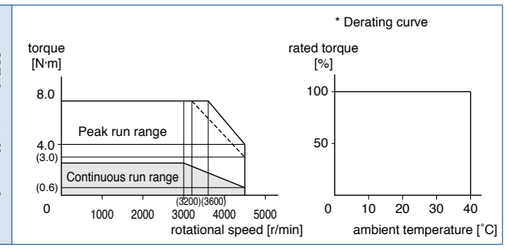


With oil seal

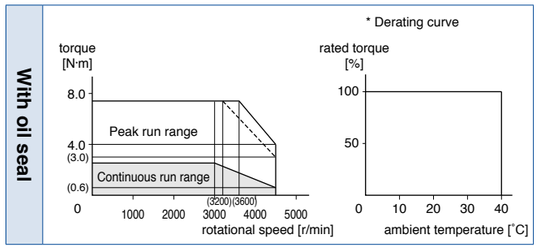


## Dimensions

Mass: Without brake/ 2.3 kg
With brake/ 3.1 kg

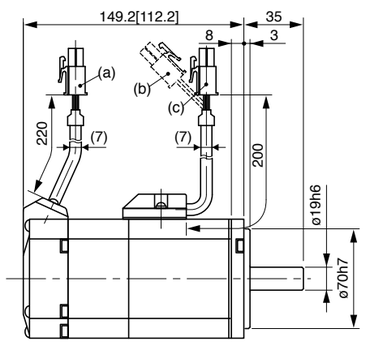


<IP65>

(a) Encoder connector
(b) Brake connector
(c) Motor connector

*1 Use hexagon socket head screw for installation.

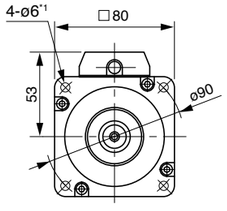


<Key way, center tap shaft>

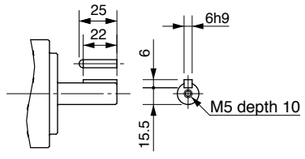


* Figures in [ ] represent the dimensions without brake.

[Unit: mm]

**<Cautions>** Reduce the moment of inertia ratio if high speed response operation is required.
Dimensions are subject to change without notice. Contact us or a dealer for the latest information.
Read the Instruction Manual carefully and understand all precautions and remarks before using the products.
Please avoid the motor, or equipment containing the motor to be distributed to Japan, or other regions through Japan.





Special Order Product

# 200 V MSME 1.0 kW [Low inertia, Middle capacity]

• Please contact us for more information.

## Specifications

| | | | AC200 V | |
|---|---|---|---|---|
| Motor model *1 | IP65 | | MSME102GC□M | MSME102SC□M |
| | IP67 | | – | – |
| Applicable driver *2 | Model No. | A5Ⅱ series | MDDKT5540 | |
| | | A5ⅡE series | MDDKT5540E | – |
| | Frame symbol | | D-frame | |
| Power supply capacity (kVA) | | | 1.8 | |
| Rated output (W) | | | 1000 | |
| Rated torque (N·m) | | | 3.18 | |
| Momentary Max. peak torque (N·m) | | | 9.55 | |
| Rated current (A(rms)) | | | 6.6 | |
| Max. current (A(o-p)) | | | 28 | |
| Regenerative brake frequency (times/min) Note)1 | Without option | | No limit Note)2 | |
| | DV0P4284 | | No limit Note)2 | |
| Rated rotational speed (r/min) | | | 3000 | |
| Max. rotational speed (r/min) | | | 5000 | |
| Moment of inertia of rotor ($\times 10^{-4}$ kg·m$^2$) | Without brake | | 2.03 | |
| | With brake | | 2.35 | |
| Recommended moment of inertia ratio of the load and the rotor Note)3 | | | 15 times or less | |
| Rotary encoder specifications Note)5 | | | 20-bit Incremental | 17-bit Absolute |
| | Resolution per single turn | | 1048576 | 131072 |

• **Brake specifications** (For details, refer to P.183)
(This brake will be released when it is energized. Do not use this for braking the motor in motion.)

| | |
|---|---|
| Static friction torque (N·m) | 7.8 or more |
| Engaging time (ms) | 50 or less |
| Releasing time (ms) Note)4 | 15 or less |
| Exciting current (DC) (A) | 0.81±10 % |
| Releasing voltage (DC) (V) | 2 or more |
| Exciting voltage (DC) (V) | 24±2.4 |

• **Permissible load** (For details, refer to P.183)

| | | |
|---|---|---|
| During assembly | Radial load P-direction (N) | 980 |
| | Thrust load A-direction (N) | 588 |
| | Thrust load B-direction (N) | 686 |
| During operation | Radial load P-direction (N) | 490 |
| | Thrust load A, B-direction (N) | 196 |

• For details of Note 1 to Note 5, refer to P.182, P.183.
• Dimensions of Driver, refer to P.43.
*1 Motor specifications: □
*2 The product that the end of driver model designation has "E" is "Position control type". Detail of model designation, refer to P.152.

## Torque characteristics (at AC200 V of power voltage <Dotted line represents the torque at 10 % less supply voltage.>)

With oil seal

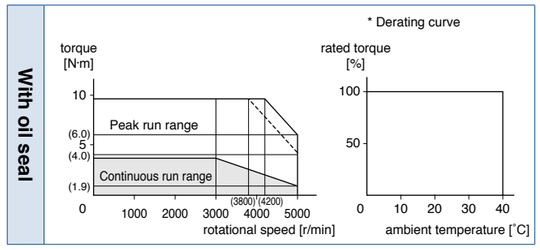


## Dimensions

Mass: Without brake/ 3.5 kg
With brake/ 4.5 kg

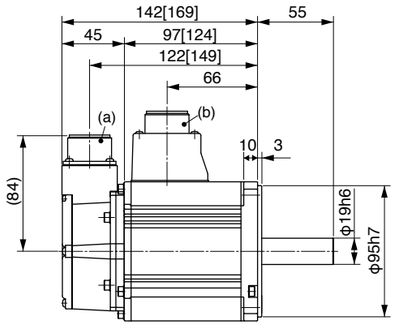


<IP65>

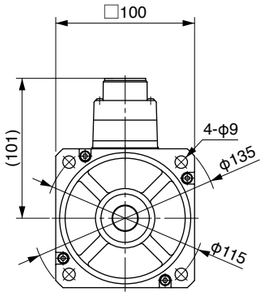


Key way dimensions

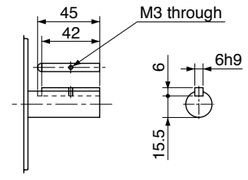


(a) Encoder connector
(b) Motor/Brake connector

* Figures in [ ] represent the dimensions with brake.

[Unit: mm]

**<Cautions>** Reduce the moment of inertia ratio if high speed response operation is required.
Dimensions are subject to change without notice. Contact us or a dealer for the latest information.
Read the Instruction Manual carefully and understand all precautions and remarks before using the products.
Please avoid the motor, or equipment containing the motor to be distributed to Japan, or other regions through Japan.

Special Order Product

# 200 V MSME 1.5 kW [Low inertia, Middle capacity]

• Please contact us for more information.

## Specifications

| | | | AC200 V | |
|---|---|---|---|---|
| Motor model *1 | IP65 | | MSME152GC□M | MSME152SC□M |
| | IP67 | | – | – |
| Applicable driver *2 | Model No. | A5Ⅱ series | MDDKT5540 | |
| | | A5ⅡE series | MDDKT5540E | – |
| | Frame symbol | | D-frame | |
| Power supply capacity (kVA) | | | 2.3 | |
| Rated output (W) | | | 1500 | |
| Rated torque (N·m) | | | 4.77 | |
| Momentary Max. peak torque (N·m) | | | 14.3 | |
| Rated current (A(rms)) | | | 8.2 | |
| Max. current (A(o-p)) | | | 35 | |
| Regenerative brake frequency (times/min) Note)1 | Without option | | No limit Note)2 | |
| | DV0P4284 | | No limit Note)2 | |
| Rated rotational speed (r/min) | | | 3000 | |
| Max. rotational speed (r/min) | | | 5000 | |
| Moment of inertia of rotor ($\times 10^{-4}$ kg·m$^2$) | Without brake | | 2.84 | |
| | With brake | | 3.17 | |
| Recommended moment of inertia ratio of the load and the rotor Note)3 | | | 15 times or less | |
| Rotary encoder specifications Note)5 | | | 20-bit Incremental | 17-bit Absolute |
| | Resolution per single turn | | 1048576 | 131072 |

• **Brake specifications** (For details, refer to P.183)
(This brake will be released when it is energized.
Do not use this for braking the motor in motion.)

| | |
|---|---|
| Static friction torque (N·m) | 7.8 or more |
| Engaging time (ms) | 50 or less |
| Releasing time (ms) Note)4 | 15 or less |
| Exciting current (DC) (A) | 0.81±10 % |
| Releasing voltage (DC) (V) | 2 or more |
| Exciting voltage (DC) (V) | 24±2.4 |

• **Permissible load** (For details, refer to P.183)

| | | |
|---|---|---|
| During assembly | Radial load P-direction (N) | 980 |
| | Thrust load A-direction (N) | 588 |
| | Thrust load B-direction (N) | 686 |
| During operation | Radial load P-direction (N) | 490 |
| | Thrust load A, B-direction (N) | 196 |

• For details of Note 1 to Note 5, refer to P.182, P.183.
• Dimensions of Driver, refer to P.43.
*1 Motor specifications: □
*2 The product that the end of driver model designation has "E" is "Position control type". Detail of model designation, refer to P.152.

## Torque characteristics (at AC200 V of power voltage <Dotted line represents the torque at 10 % less supply voltage.>)

With oil seal

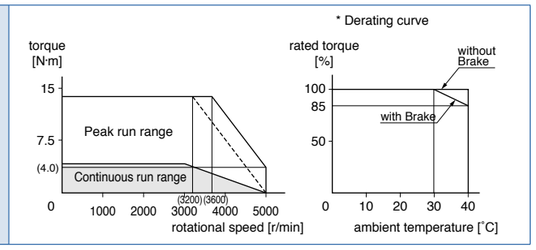


## Dimensions

Mass: Without brake/ 4.4 kg
With brake/ 5.4 kg

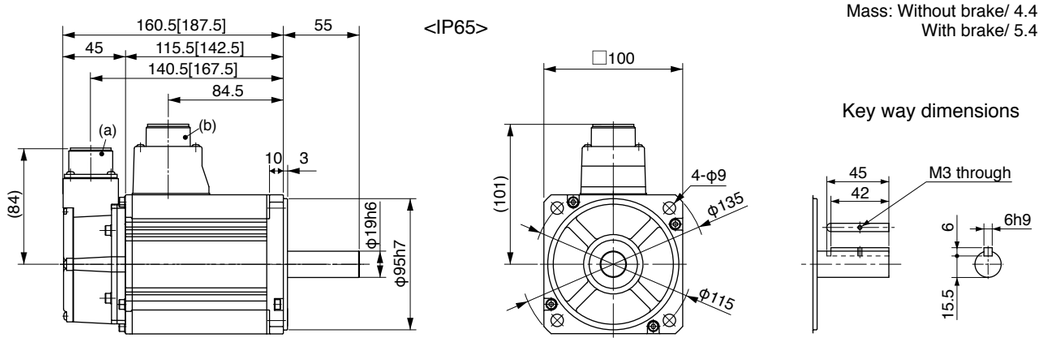


(a) Encoder connector
(b) Motor/Brake connector

* Figures in [ ] represent the dimensions with brake.

[Unit: mm]

**<Cautions>** Reduce the moment of inertia ratio if high speed response operation is required.
Dimensions are subject to change without notice. Contact us or a dealer for the latest information.
Read the Instruction Manual carefully and understand all precautions and remarks before using the products.
Please avoid the motor, or equipment containing the motor to be distributed to Japan, or other regions through Japan.



Special Order Product

# 200 V MSME 2.0 kW [Low inertia, Middle capacity]



• Please contact us for more information.

## Specifications

| | | | AC200 V | |
|---|---|---|---|---|
| Motor model *1 | IP65 | | MSME202GC□M | MSME202SC□M |
| | IP67 | | – | – |
| Applicable driver *2 | Model No. | A5Ⅱ series | MEDKT7364 | |
| | | A5ⅡE series | MEDKT7364E | – |
| | Frame symbol | | E-frame | |
| Power supply capacity (kVA) | | | 3.3 | |
| Rated output (W) | | | 2000 | |
| Rated torque (N·m) | | | 6.37 | |
| Momentary Max. peak torque (N·m) | | | 19.1 | |
| Rated current (A(rms)) | | | 11.3 | |
| Max. current (A(o-p)) | | | 48 | |
| Regenerative brake frequency (times/min) Note)1 | Without option | | No limit Note)2 | |
| | DV0P4285 | | No limit Note)2 | |
| Rated rotational speed (r/min) | | | 3000 | |
| Max. rotational speed (r/min) | | | 5000 | |
| Moment of inertia of rotor ($\times 10^{-4}$ kg·m$^2$) | Without brake | | 3.68 | |
| | With brake | | 4.01 | |
| Recommended moment of inertia ratio of the load and the rotor Note)3 | | | 15 times or less | |
| Rotary encoder specifications Note)5 | | | 20-bit Incremental | 17-bit Absolute |
| | Resolution per single turn | | 1048576 | 131072 |

• **Brake specifications** (For details, refer to P.183)
(This brake will be released when it is energized.
Do not use this for braking the motor in motion.)

| | |
|---|---|
| Static friction torque (N·m) | 7.8 or more |
| Engaging time (ms) | 50 or less |
| Releasing time (ms) Note)4 | 15 or less |
| Exciting current (DC) (A) | 0.81±10 % |
| Releasing voltage (DC) (V) | 2 or more |
| Exciting voltage (DC) (V) | 24±2.4 |

• **Permissible load** (For details, refer to P.183)

| | | |
|---|---|---|
| During assembly | Radial load P-direction (N) | 980 |
| | Thrust load A-direction (N) | 588 |
| | Thrust load B-direction (N) | 686 |
| During operation | Radial load P-direction (N) | 490 |
| | Thrust load A, B-direction (N) | 196 |

• For details of Note 1 to Note 5, refer to P.182, P.183.
• Dimensions of Driver, refer to P.44.
*1 Motor specifications: □
*2 The product that the end of driver model designation has "E" is "Position control type". Detail of model designation, refer to P.152.

## Torque characteristics (at AC200 V of power voltage <Dotted line represents the torque at 10 % less supply voltage.>)

With oil seal

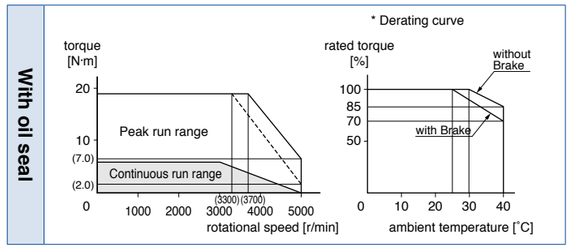


## Dimensions

Mass: Without brake/ 5.3 kg
With brake/ 6.3 kg

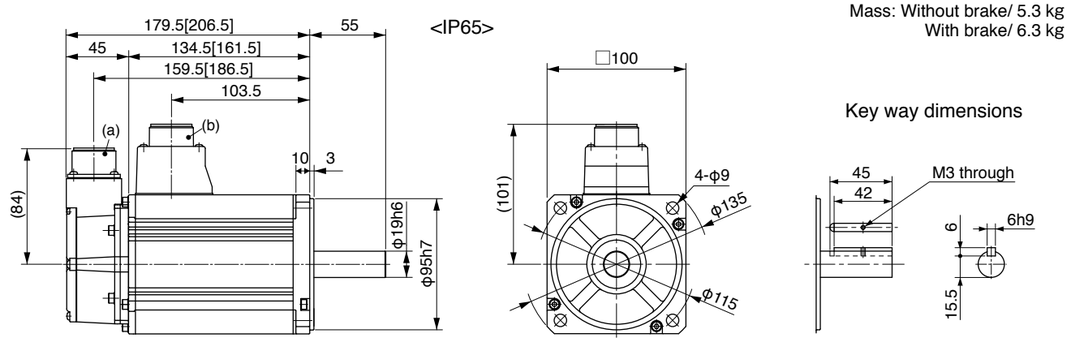


(a) Encoder connector
(b) Motor/Brake connector

* Figures in [ ] represent the dimensions with brake.

[Unit: mm]

**<Cautions>** Reduce the moment of inertia ratio if high speed response operation is required.
Dimensions are subject to change without notice. Contact us or a dealer for the latest information.
Read the Instruction Manual carefully and understand all precautions and remarks before using the products.
Please avoid the motor, or equipment containing the motor to be distributed to Japan, or other regions through Japan.

Special Order Product

# 200 V MSME 3.0 kW [Low inertia, Middle capacity]

• Please contact us for more information.

## Specifications

| | | | AC200 V | |
|---|---|---|---|---|
| Motor model *1 | IP65 | | MSME302GC□M | MSME302SC□M |
| | IP67 | | – | – |
| Applicable driver *2 | Model No. | A5Ⅱ series | MFDKTA390 | |
| | | A5ⅡE series | MFDKTA390E | – |
| | Frame symbol | | F-frame | |
| Power supply capacity (kVA) | | | 4.5 | |
| Rated output (W) | | | 3000 | |
| Rated torque (N·m) | | | 9.55 | |
| Momentary Max. peak torque (N·m) | | | 28.6 | |
| Rated current (A(rms)) | | | 18.1 | |
| Max. current (A(o-p)) | | | 77 | |
| Regenerative brake frequency (times/min) Note)1 | Without option | | No limit Note)2 | |
| | DV0P4285×2 | | No limit Note)2 | |
| Rated rotational speed (r/min) | | | 3000 | |
| Max. rotational speed (r/min) | | | 5000 | |
| Moment of inertia of rotor ($\times 10^{-4}$ kg·m$^2$) | Without brake | | 6.50 | |
| | With brake | | 7.85 | |
| Recommended moment of inertia ratio of the load and the rotor Note)3 | | | 15 times or less | |
| Rotary encoder specifications Note)5 | | | 20-bit Incremental | 17-bit Absolute |
| | Resolution per single turn | | 1048576 | 131072 |

• **Brake specifications** (For details, refer to P.183)
(This brake will be released when it is energized.
Do not use this for braking the motor in motion.)

| | |
|---|---|
| Static friction torque (N·m) | 11.8 or more |
| Engaging time (ms) | 80 or less |
| Releasing time (ms) Note)4 | 15 or less |
| Exciting current (DC) (A) | 0.81±10 % |
| Releasing voltage (DC) (V) | 2 or more |
| Exciting voltage (DC) (V) | 24±2.4 |

• **Permissible load** (For details, refer to P.183)

| | | |
|---|---|---|
| During assembly | Radial load P-direction (N) | 980 |
| | Thrust load A-direction (N) | 588 |
| | Thrust load B-direction (N) | 686 |
| During operation | Radial load P-direction (N) | 490 |
| | Thrust load A, B-direction (N) | 196 |

• For details of Note 1 to Note 5, refer to P.182, P.183.
• Dimensions of Driver, refer to P.45.
*1 Motor specifications: □
*2 The product that the end of driver model designation has "E" is "Position control type". Detail of model designation, refer to P.152.

## Torque characteristics (at AC200 V of power voltage <Dotted line represents the torque at 10 % less supply voltage.>)

With oil seal

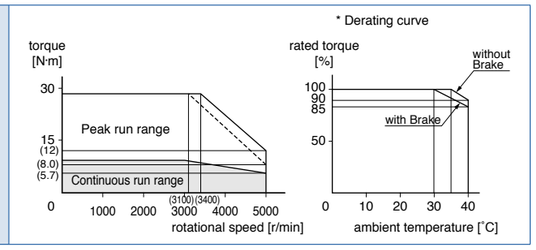


## Dimensions

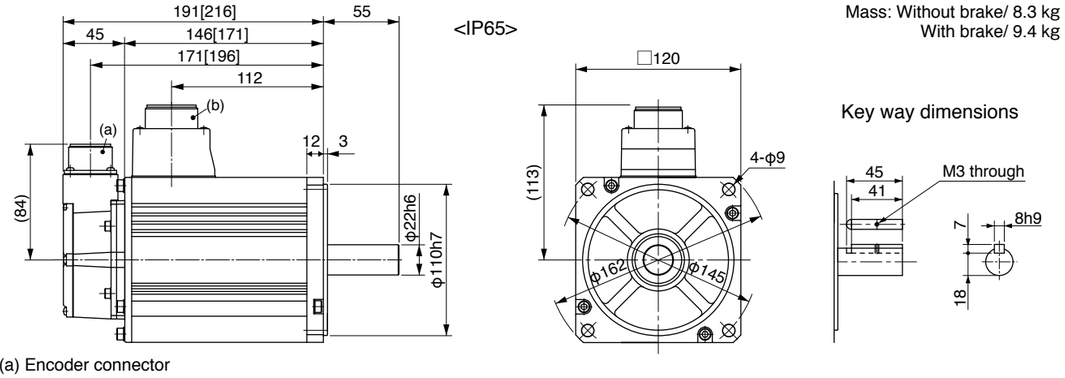


Mass: Without brake/ 8.3 kg
With brake/ 9.4 kg

(a) Encoder connector
(b) Motor/Brake connector

* Figures in [ ] represent the dimensions with brake.

[Unit: mm]

**<Cautions>** Reduce the moment of inertia ratio if high speed response operation is required.
Dimensions are subject to change without notice. Contact us or a dealer for the latest information.
Read the Instruction Manual carefully and understand all precautions and remarks before using the products.
Please avoid the motor, or equipment containing the motor to be distributed to Japan, or other regions through Japan.



Special Order Product

# 200 V MSME 4.0 kW [Low inertia, Middle capacity]



• Please contact us for more information.

## Specifications

| | | | AC200 V | |
|---|---|---|---|---|
| Motor model *1 | IP65 | | MSME402GC□M | MSME402SC□M |
| | IP67 | | – | – |
| Applicable driver *2 | Model No. | A5Ⅱ series | MFDKTB3A2 | |
| | | A5ⅡE series | MFDKTB3A2E | – |
| | Frame symbol | | F-frame | |
| Power supply capacity (kVA) | | | 6.0 | |
| Rated output (W) | | | 4000 | |
| Rated torque (N·m) | | | 12.7 | |
| Momentary Max. peak torque (N·m) | | | 38.2 | |
| Rated current (A(rms)) | | | 19.6 | |
| Max. current (A(o-p)) | | | 83 | |
| Regenerative brake frequency (times/min) Note)1 | Without option | | No limit Note)2 | |
| | DV0P4285×2 | | No limit Note)2 | |
| Rated rotational speed (r/min) | | | 3000 | |
| Max. rotational speed (r/min) | | | 4500 | |
| Moment of inertia of rotor ($\times 10^{-4}$ kg·m$^2$) | Without brake | | 12.9 | |
| | With brake | | 14.2 | |
| Recommended moment of inertia ratio of the load and the rotor Note)3 | | | 15 times or less | |
| Rotary encoder specifications Note)5 | | | 20-bit Incremental | 17-bit Absolute |
| | Resolution per single turn | | 1048576 | 131072 |

• **Brake specifications** (For details, refer to P.183)
(This brake will be released when it is energized.
Do not use this for braking the motor in motion.)

| | |
|---|---|
| Static friction torque (N·m) | 16.2 or more |
| Engaging time (ms) | 110 or less |
| Releasing time (ms) Note)4 | 50 or less |
| Exciting current (DC) (A) | 0.90±10 % |
| Releasing voltage (DC) (V) | 2 or more |
| Exciting voltage (DC) (V) | 24±2.4 |

• **Permissible load** (For details, refer to P.183)

| | | |
|---|---|---|
| During assembly | Radial load P-direction (N) | 980 |
| | Thrust load A-direction (N) | 588 |
| | Thrust load B-direction (N) | 686 |
| During operation | Radial load P-direction (N) | 784 |
| | Thrust load A, B-direction (N) | 343 |

• For details of Note 1 to Note 5, refer to P.182, P.183.
• Dimensions of Driver, refer to P.45.
*1 Motor specifications: □
*2 The product that the end of driver model designation has "E" is "Position control type". Detail of model designation, refer to P.152.

## Torque characteristics (at AC200 V of power voltage <Dotted line represents the torque at 10 % less supply voltage.>)

With oil seal

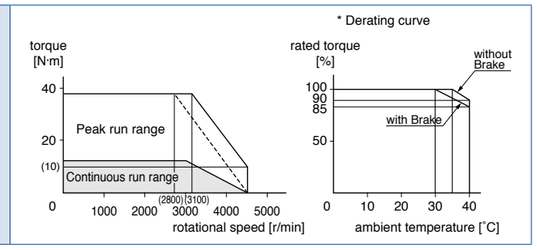


## Dimensions

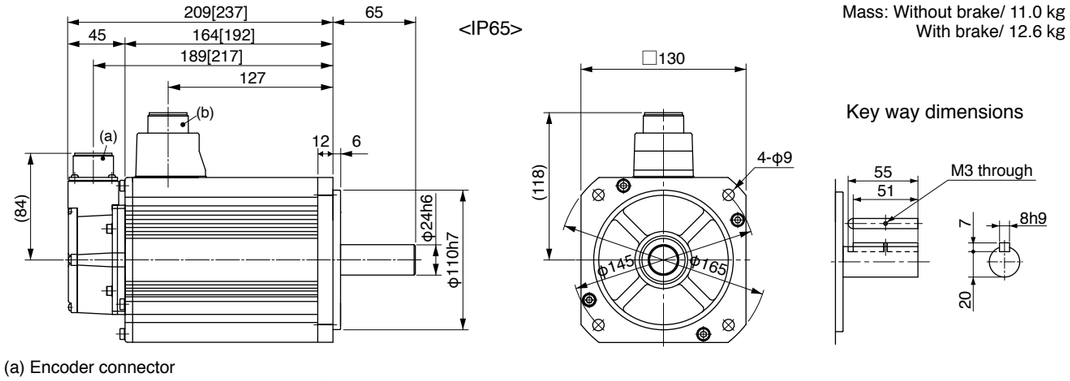


Mass: Without brake/ 11.0 kg
With brake/ 12.6 kg

(a) Encoder connector
(b) Motor/Brake connector

* Figures in [ ] represent the dimensions with brake.

[Unit: mm]

**<Cautions>** Reduce the moment of inertia ratio if high speed response operation is required.
Dimensions are subject to change without notice. Contact us or a dealer for the latest information.
Read the Instruction Manual carefully and understand all precautions and remarks before using the products.
Please avoid the motor, or equipment containing the motor to be distributed to Japan, or other regions through Japan.

Special Order Product

# 200 V MSME 5.0 kW [Low inertia, Middle capacity]

• Please contact us for more information.

## Specifications

| | | | AC200 V | |
|---|---|---|---|---|
| Motor model *1 | IP65 | | MSME502GC□M | MSME502SC□M |
| | IP67 | | – | – |
| Applicable driver *2 | Model No. | A5Ⅱ series | MFDKTB3A2 | |
| | | A5ⅡE series | MFDKTB3A2E | – |
| | Frame symbol | | F-frame | |
| Power supply capacity (kVA) | | | 7.5 | |
| Rated output (W) | | | 5000 | |
| Rated torque (N·m) | | | 15.9 | |
| Momentary Max. peak torque (N·m) | | | 47.7 | |
| Rated current (A(rms)) | | | 24.0 | |
| Max. current (A(o-p)) | | | 102 | |
| Regenerative brake frequency (times/min) Note)1 | Without option | | 357 | |
| | DV0P4285×2 | | No limit Note)2 | |
| Rated rotational speed (r/min) | | | 3000 | |
| Max. rotational speed (r/min) | | | 4500 | |
| Moment of inertia of rotor ($\times10^{-4}$ kg·m$^2$) | Without brake | | 17.4 | |
| | With brake | | 18.6 | |
| Recommended moment of inertia ratio of the load and the rotor Note)3 | | | 15 times or less | |
| Rotary encoder specifications Note)5 | | | 20-bit Incremental | 17-bit Absolute |
| | Resolution per single turn | | 1048576 | 131072 |

• **Brake specifications** (For details, refer to P.183)
(This brake will be released when it is energized.
Do not use this for braking the motor in motion.)

| | |
|---|---|
| Static friction torque (N·m) | 16.2 or more |
| Engaging time (ms) | 110 or less |
| Releasing time (ms) Note)4 | 50 or less |
| Exciting current (DC) (A) | 0.90±10 % |
| Releasing voltage (DC) (V) | 2 or more |
| Exciting voltage (DC) (V) | 24±2.4 |

• **Permissible load** (For details, refer to P.183)

| | | |
|---|---|---|
| During assembly | Radial load P-direction (N) | 980 |
| | Thrust load A-direction (N) | 588 |
| | Thrust load B-direction (N) | 686 |
| During operation | Radial load P-direction (N) | 784 |
| | Thrust load A, B-direction (N) | 343 |

• For details of Note 1 to Note 5, refer to P.182, P.183.
• Dimensions of Driver, refer to P.45.
*1 Motor specifications: □
*2 The product that the end of driver model designation has "E" is "Position control type". Detail of model designation, refer to P.152.

## Torque characteristics (at AC200 V of power voltage <Dotted line represents the torque at 10 % less supply voltage.>)

With oil seal

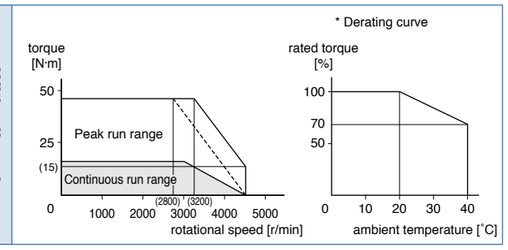


## Dimensions

Mass: Without brake/ 14.0 kg
With brake/ 16.0 kg

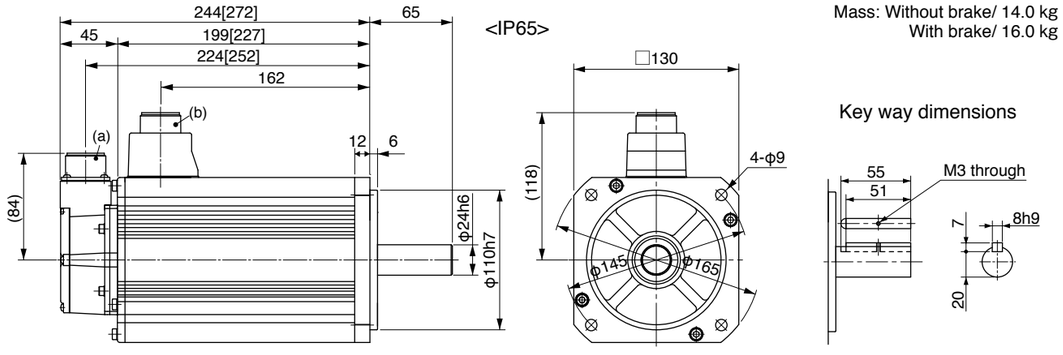


(a) Encoder connector
(b) Motor/Brake connector

* Figures in [ ] represent the dimensions with brake.

[Unit: mm]

**<Cautions>** Reduce the moment of inertia ratio if high speed response operation is required.
Dimensions are subject to change without notice. Contact us or a dealer for the latest information.
Read the Instruction Manual carefully and understand all precautions and remarks before using the products.
Please avoid the motor, or equipment containing the motor to be distributed to Japan, or other regions through Japan.



Special Order Product

# 200 V MDME 1.0 kW [Middle inertia, Middle capacity]



• Please contact us for more information.

## Specifications

| | | | AC200 V | |
|---|---|---|---|---|
| Motor model *1 | IP65 | | MDME102GC□M | MDME102SC□M |
| | IP67 | | – | – |
| Applicable driver *2 | Model No. | A5Ⅱ series | MDDKT3530 | |
| | | A5ⅡE series | MDDKT3530E | – |
| | Frame symbol | | D-frame | |
| Power supply capacity (kVA) | | | 1.8 | |
| Rated output (W) | | | 1000 | |
| Rated torque (N·m) | | | 4.77 | |
| Momentary Max. peak torque (N·m) | | | 14.3 | |
| Rated current (A(rms)) | | | 5.7 | |
| Max. current (A(o-p)) | | | 24 | |
| Regenerative brake frequency (times/min) Note)1 | Without option | | No limit Note)2 | |
| | DV0P4284 | | No limit Note)2 | |
| Rated rotational speed (r/min) | | | 2000 | |
| Max. rotational speed (r/min) | | | 3000 | |
| Moment of inertia of rotor ($\times10^{-4}$ kg·m$^2$) | Without brake | | 4.60 | |
| | With brake | | 5.90 | |
| Recommended moment of inertia ratio of the load and the rotor Note)3 | | | 10 times or less | |
| Rotary encoder specifications Note)5 | | | 20-bit Incremental | 17-bit Absolute |
| | Resolution per single turn | | 1048576 | 131072 |

• **Brake specifications** (For details, refer to P.183)
(This brake will be released when it is energized.
Do not use this for braking the motor in motion.)

| | |
|---|---|
| Static friction torque (N·m) | 4.9 or more |
| Engaging time (ms) | 80 or less |
| Releasing time (ms) Note)4 | 70 or less |
| Exciting current (DC) (A) | 0.59±10 % |
| Releasing voltage (DC) (V) | 2 or more |
| Exciting voltage (DC) (V) | 24±2.4 |

• **Permissible load** (For details, refer to P.183)

| | | |
|---|---|---|
| During assembly | Radial load P-direction (N) | 980 |
| | Thrust load A-direction (N) | 588 |
| | Thrust load B-direction (N) | 686 |
| During operation | Radial load P-direction (N) | 490 |
| | Thrust load A, B-direction (N) | 196 |

• For details of Note 1 to Note 5, refer to P.182, P.183.
• Dimensions of Driver, refer to P.43.
*1 Motor specifications: □
*2 The product that the end of driver model designation has "E" is "Position control type". Detail of model designation, refer to P.152.

## Torque characteristics (at AC200 V of power voltage <Dotted line represents the torque at 10 % less supply voltage.>)

With oil seal

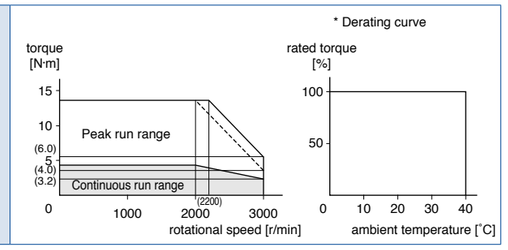


## Dimensions

Mass: Without brake/ 5.2 kg
With brake/ 6.7 kg

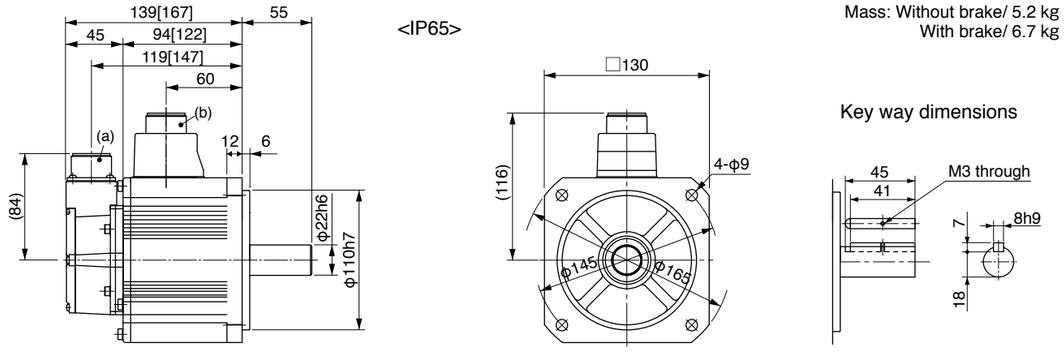


(a) Encoder connector
(b) Motor/Brake connector

* Figures in [ ] represent the dimensions with brake.

[Unit: mm]

**<Cautions>** Reduce the moment of inertia ratio if high speed response operation is required.
Dimensions are subject to change without notice. Contact us or a dealer for the latest information.
Read the Instruction Manual carefully and understand all precautions and remarks before using the products.
Please avoid the motor, or equipment containing the motor to be distributed to Japan, or other regions through Japan.

Special Order Product

# 200 V MDME 1.5 kW [Middle inertia, Middle capacity]

• Please contact us for more information.

## Specifications

| | | | AC200 V | |
|---|---|---|---|---|
| Motor model *1 | IP65 | | MDME152GC□M | MDME152SC□M |
| | IP67 | | – | – |
| Applicable driver *2 | Model No. | A5Ⅱ series | MDDKT5540 | |
| | | A5ⅡE series | MDDKT5540E | – |
| | Frame symbol | | D-frame | |
| Power supply capacity (kVA) | | | 2.3 | |
| Rated output (W) | | | 1500 | |
| Rated torque (N·m) | | | 7.16 | |
| Momentary Max. peak torque (N·m) | | | 21.5 | |
| Rated current (A(rms)) | | | 9.4 | |
| Max. current (A(o-p)) | | | 40 | |
| Regenerative brake frequency (times/min) Note)1 | Without option | | No limit Note)2 | |
| | DV0P4284 | | No limit Note)2 | |
| Rated rotational speed (r/min) | | | 2000 | |
| Max. rotational speed (r/min) | | | 3000 | |
| Moment of inertia of rotor ($\times10^{-4}$ kg·m$^2$) | Without brake | | 6.70 | |
| | With brake | | 7.99 | |
| Recommended moment of inertia ratio of the load and the rotor Note)3 | | | 10 times or less | |
| Rotary encoder specifications Note)5 | | | 20-bit Incremental | 17-bit Absolute |
| | Resolution per single turn | | 1048576 | 131072 |

• **Brake specifications** (For details, refer to P.183)
(This brake will be released when it is energized.
Do not use this for braking the motor in motion.)

| | |
|---|---|
| Static friction torque (N·m) | 13.7 or more |
| Engaging time (ms) | 100 or less |
| Releasing time (ms) Note)4 | 50 or less |
| Exciting current (DC) (A) | 0.79±10 % |
| Releasing voltage (DC) (V) | 2 or more |
| Exciting voltage (DC) (V) | 24±2.4 |

• **Permissible load** (For details, refer to P.183)

| | | |
|---|---|---|
| During assembly | Radial load P-direction (N) | 980 |
| | Thrust load A-direction (N) | 588 |
| | Thrust load B-direction (N) | 686 |
| During operation | Radial load P-direction (N) | 490 |
| | Thrust load A, B-direction (N) | 196 |

• For details of Note 1 to Note 5, refer to P.182, P.183.
• Dimensions of Driver, refer to P.43.
*1 Motor specifications: □
*2 The product that the end of driver model designation has "E" is "Position control type". Detail of model designation, refer to P.152.

## Torque characteristics (at AC200 V of power voltage <Dotted line represents the torque at 10 % less supply voltage.>)

With oil seal

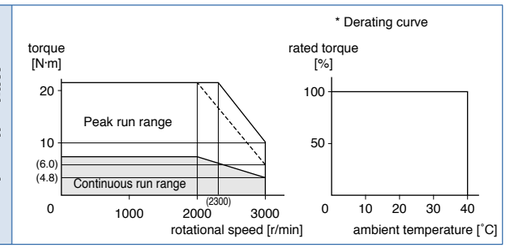


## Dimensions

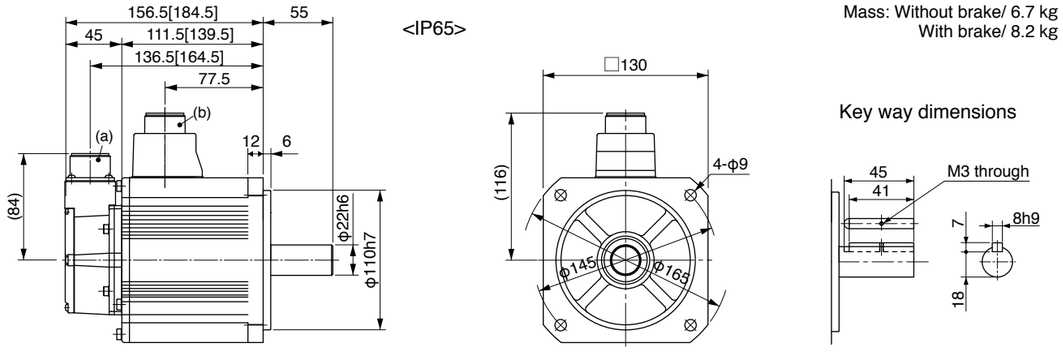


Mass: Without brake/ 6.7 kg
With brake/ 8.2 kg

(a) Encoder connector
(b) Motor/Brake connector

* Figures in [ ] represent the dimensions with brake.

[Unit: mm]

**<Cautions>** Reduce the moment of inertia ratio if high speed response operation is required.
Dimensions are subject to change without notice. Contact us or a dealer for the latest information.
Read the Instruction Manual carefully and understand all precautions and remarks before using the products.
Please avoid the motor, or equipment containing the motor to be distributed to Japan, or other regions through Japan.





Special Order Product

# 200 V MDME 2.0 kW [Middle inertia, Middle capacity]

• Please contact us for more information.

## Specifications

| | | | AC200 V | |
|---|---|---|---|---|
| Motor model *1 | IP65 | | MDME202GC□M | MDME202SC□M |
| | IP67 | | – | – |
| Applicable driver *2 | Model No. | A5Ⅱ series | MEDKT7364 | |
| | | A5ⅡE series | MEDKT7364E | – |
| | Frame symbol | | E-frame | |
| Power supply capacity (kVA) | | | 3.3 | |
| Rated output (W) | | | 2000 | |
| Rated torque (N·m) | | | 9.55 | |
| Momentary Max. peak torque (N·m) | | | 28.6 | |
| Rated current (A(rms)) | | | 11.5 | |
| Max. current (A(o-p)) | | | 49 | |
| Regenerative brake frequency (times/min) Note)1 | Without option | | No limit Note)2 | |
| | DV0P4285 | | No limit Note)2 | |
| Rated rotational speed (r/min) | | | 2000 | |
| Max. rotational speed (r/min) | | | 3000 | |
| Moment of inertia of rotor ($\times10^{-4}$ kg·m$^2$) | Without brake | | 8.72 | |
| | With brake | | 10.0 | |
| Recommended moment of inertia ratio of the load and the rotor Note)3 | | | 10 times or less | |
| Rotary encoder specifications Note)5 | | | 20-bit Incremental | 17-bit Absolute |
| | Resolution per single turn | | 1048576 | 131072 |

• **Brake specifications** (For details, refer to P.183)
(This brake will be released when it is energized.
Do not use this for braking the motor in motion.)

| | |
|---|---|
| Static friction torque (N·m) | 13.7 or more |
| Engaging time (ms) | 100 or less |
| Releasing time (ms) Note)4 | 50 or less |
| Exciting current (DC) (A) | 0.79±10 % |
| Releasing voltage (DC) (V) | 2 or more |
| Exciting voltage (DC) (V) | 24±2.4 |

• **Permissible load** (For details, refer to P.183)

| | | |
|---|---|---|
| During assembly | Radial load P-direction (N) | 980 |
| | Thrust load A-direction (N) | 588 |
| | Thrust load B-direction (N) | 686 |
| During operation | Radial load P-direction (N) | 490 |
| | Thrust load A, B-direction (N) | 196 |

• For details of Note 1 to Note 5, refer to P.182, P.183.
• Dimensions of Driver, refer to P.43.
*1 Motor specifications: □
*2 The product that the end of driver model designation has "E" is "Position control type". Detail of model designation, refer to P.152.

## Torque characteristics (at AC200 V of power voltage <Dotted line represents the torque at 10 % less supply voltage.>)

With oil seal

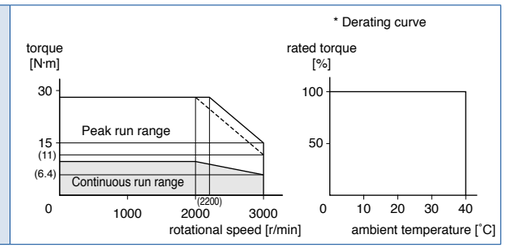


## Dimensions

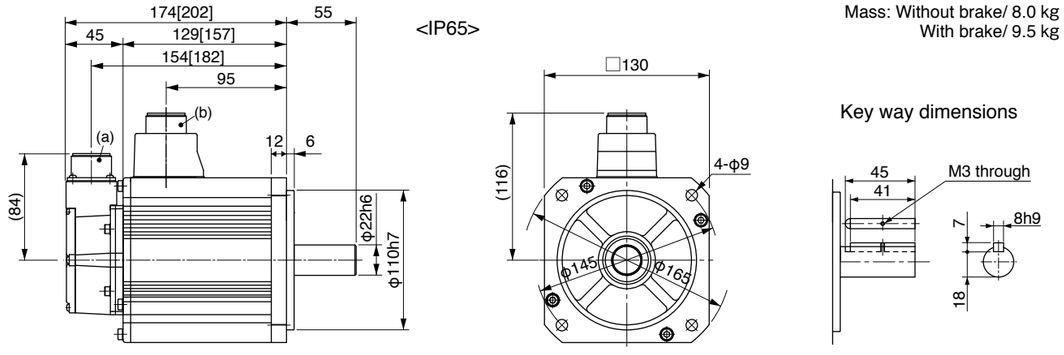


Mass: Without brake/ 8.0 kg
With brake/ 9.5 kg

(a) Encoder connector
(b) Motor/Brake connector

* Figures in [ ] represent the dimensions with brake.

[Unit: mm]

**<Cautions>** Reduce the moment of inertia ratio if high speed response operation is required.
Dimensions are subject to change without notice. Contact us or a dealer for the latest information.
Read the Instruction Manual carefully and understand all precautions and remarks before using the products.
Please avoid the motor, or equipment containing the motor to be distributed to Japan, or other regions through Japan.

Special Order Product

# 200 V MDME 3.0 kW [Middle inertia, Middle capacity]

• Please contact us for more information.

## Specifications

| | | | AC200 V | |
|---|---|---|---|---|
| Motor model *1 | IP65 | | MDME302GC□M | MDME302SC□M |
| | IP67 | | – | – |
| Applicable driver *2 | Model No. | A5Ⅱ series | MFDKTA390 | |
| | | A5ⅡE series | MFDKTA390E | – |
| | Frame symbol | | F-frame | |
| Power supply capacity (kVA) | | | 4.5 | |
| Rated output (W) | | | 3000 | |
| Rated torque (N·m) | | | 14.3 | |
| Momentary Max. peak torque (N·m) | | | 43.0 | |
| Rated current (A(rms)) | | | 17.4 | |
| Max. current (A(o-p)) | | | 74 | |
| Regenerative brake frequency (times/min) Note)1 | Without option | | No limit Note)2 | |
| | DV0P4285×2 | | No limit Note)2 | |
| Rated rotational speed (r/min) | | | 2000 | |
| Max. rotational speed (r/min) | | | 3000 | |
| Moment of inertia of rotor ($\times 10^{-4}$ kg·m$^2$) | Without brake | | 12.9 | |
| | With brake | | 14.2 | |
| Recommended moment of inertia ratio of the load and the rotor Note)3 | | | 10 times or less | |
| Rotary encoder specifications Note)5 | | | 20-bit Incremental | 17-bit Absolute |
| | Resolution per single turn | | 1048576 | 131072 |

• **Brake specifications** (For details, refer to P.183)
(This brake will be released when it is energized. Do not use this for braking the motor in motion.)

| | |
|---|---|
| Static friction torque (N·m) | 16.2 or more |
| Engaging time (ms) | 110 or less |
| Releasing time (ms) Note)4 | 50 or less |
| Exciting current (DC) (A) | 0.90±10 % |
| Releasing voltage (DC) (V) | 2 or more |
| Exciting voltage (DC) (V) | 24±2.4 |

• **Permissible load** (For details, refer to P.183)

| | | |
|---|---|---|
| During assembly | Radial load P-direction (N) | 980 |
| | Thrust load A-direction (N) | 588 |
| | Thrust load B-direction (N) | 686 |
| During operation | Radial load P-direction (N) | 784 |
| | Thrust load A, B-direction (N) | 343 |

• For details of Note 1 to Note 5, refer to P.182, P.183.
• Dimensions of Driver, refer to P.45.
*1 Motor specifications: □
*2 The product that the end of driver model designation has "E" is "Position control type". Detail of model designation, refer to P.152.

## Torque characteristics (at AC200 V of power voltage <Dotted line represents the torque at 10 % less supply voltage.>)

With oil seal

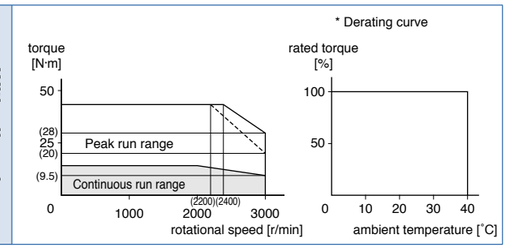


## Dimensions

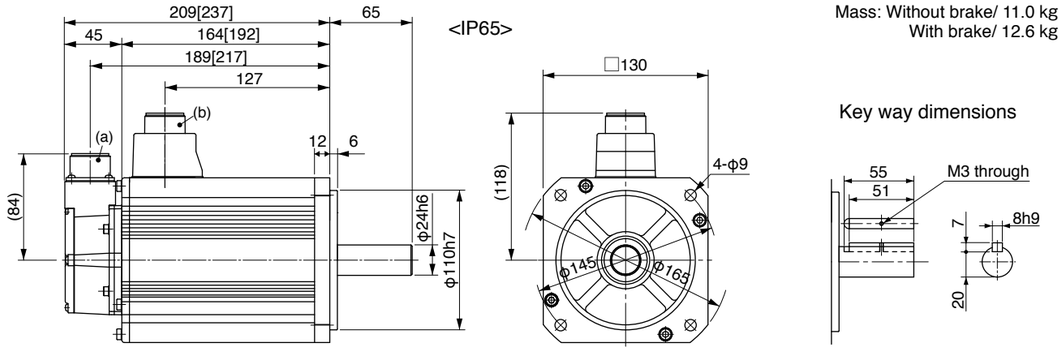


Mass: Without brake/ 11.0 kg
With brake/ 12.6 kg

(a) Encoder connector
(b) Motor/Brake connector

* Figures in [ ] represent the dimensions with brake.

[Unit: mm]

**<Cautions>** Reduce the moment of inertia ratio if high speed response operation is required.
Dimensions are subject to change without notice. Contact us or a dealer for the latest information.
Read the Instruction Manual carefully and understand all precautions and remarks before using the products.
Please avoid the motor, or equipment containing the motor to be distributed to Japan, or other regions through Japan.



Special Order Product

# 200 V MDME 4.0 kW [Middle inertia, Middle capacity]



• Please contact us for more information.

## Specifications

| | | | AC200 V | |
|---|---|---|---|---|
| Motor model *1 | IP65 | | MDME402GC□M | MDME402SC□M |
| | IP67 | | – | – |
| Applicable driver *2 | Model No. | A5Ⅱ series | MFDKTB3A2 | |
| | | A5ⅡE series | MFDKTB3A2E | – |
| | Frame symbol | | F-frame | |
| Power supply capacity (kVA) | | | 6.0 | |
| Rated output (W) | | | 4000 | |
| Rated torque (N·m) | | | 19.1 | |
| Momentary Max. peak torque (N·m) | | | 57.3 | |
| Rated current (A(rms)) | | | 21.0 | |
| Max. current (A(o-p)) | | | 89 | |
| Regenerative brake frequency (times/min) Note)1 | Without option | | No limit Note)2 | |
| | DV0P4285×2 | | No limit Note)2 | |
| Rated rotational speed (r/min) | | | 2000 | |
| Max. rotational speed (r/min) | | | 3000 | |
| Moment of inertia of rotor ($\times 10^{-4}$ kg·m$^2$) | Without brake | | 37.6 | |
| | With brake | | 38.6 | |
| Recommended moment of inertia ratio of the load and the rotor Note)3 | | | 10 times or less | |
| Rotary encoder specifications Note)5 | | | 20-bit Incremental | 17-bit Absolute |
| | Resolution per single turn | | 1048576 | 131072 |

• **Brake specifications** (For details, refer to P.183)
(This brake will be released when it is energized. Do not use this for braking the motor in motion.)

| | |
|---|---|
| Static friction torque (N·m) | 24.5 or more |
| Engaging time (ms) | 80 or less |
| Releasing time (ms) Note)4 | 25 or less |
| Exciting current (DC) (A) | 1.3±10 % |
| Releasing voltage (DC) (V) | 2 or more |
| Exciting voltage (DC) (V) | 24±2.4 |

• **Permissible load** (For details, refer to P.183)

| | | |
|---|---|---|
| During assembly | Radial load P-direction (N) | 1666 |
| | Thrust load A-direction (N) | 784 |
| | Thrust load B-direction (N) | 980 |
| During operation | Radial load P-direction (N) | 784 |
| | Thrust load A, B-direction (N) | 343 |

• For details of Note 1 to Note 5, refer to P.182, P.183.
• Dimensions of Driver, refer to P.45.
*1 Motor specifications: □
*2 The product that the end of driver model designation has "E" is "Position control type". Detail of model designation, refer to P.152.

## Torque characteristics (at AC200 V of power voltage <Dotted line represents the torque at 10 % less supply voltage.>)

With oil seal

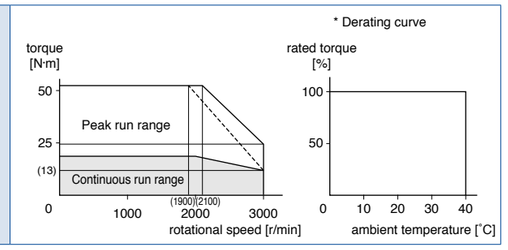


## Dimensions

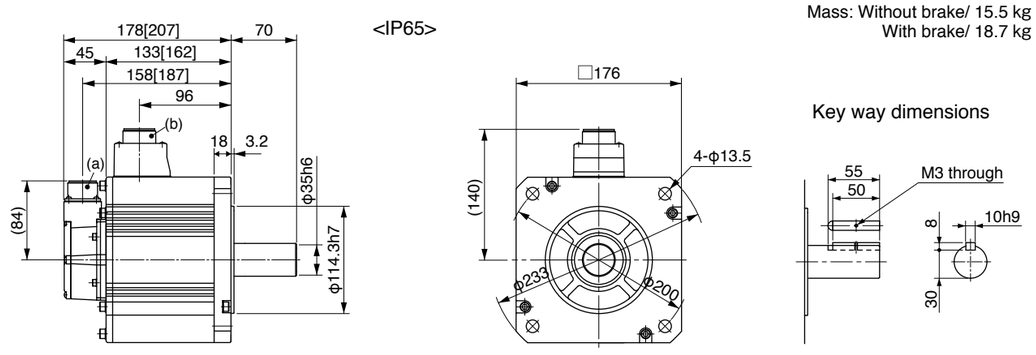


Mass: Without brake/ 15.5 kg
With brake/ 18.7 kg

(a) Encoder connector
(b) Motor/Brake connector

* Figures in [ ] represent the dimensions with brake.

[Unit: mm]

**<Cautions>** Reduce the moment of inertia ratio if high speed response operation is required.
Dimensions are subject to change without notice. Contact us or a dealer for the latest information.
Read the Instruction Manual carefully and understand all precautions and remarks before using the products.
Please avoid the motor, or equipment containing the motor to be distributed to Japan, or other regions through Japan.

Special Order Product

# 200 V MDME 5.0 kW [Middle inertia, Middle capacity]

• Please contact us for more information.

## Specifications

| | | | AC200 V | |
|---|---|---|---|---|
| Motor model *1 | IP65 | | MDME502GC□M | MDME502SC□M |
| | IP67 | | – | – |
| Applicable driver *2 | Model No. | A5Ⅱ series | MFDKTB3A2 | |
| | | A5ⅡE series | MFDKTB3A2E | – |
| | Frame symbol | | F-frame | |
| Power supply capacity (kVA) | | | 7.5 | |
| Rated output (W) | | | 5000 | |
| Rated torque (N·m) | | | 23.9 | |
| Momentary Max. peak torque (N·m) | | | 71.6 | |
| Rated current (A(rms)) | | | 25.9 | |
| Max. current (A(o-p)) | | | 110 | |
| Regenerative brake frequency (times/min) Note)1 | Without option | | 120 | |
| | DV0P4285×2 | | No limit Note)2 | |
| Rated rotational speed (r/min) | | | 2000 | |
| Max. rotational speed (r/min) | | | 3000 | |
| Moment of inertia of rotor ($\times10^{-4}$ kg·m$^2$) | Without brake | | 48.0 | |
| | With brake | | 48.8 | |
| Recommended moment of inertia ratio of the load and the rotor Note)3 | | | 10 times or less | |
| Rotary encoder specifications Note)5 | | | 20-bit Incremental | 17-bit Absolute |
| | Resolution per single turn | | 1048576 | 131072 |

• **Brake specifications** (For details, refer to P.183)
(This brake will be released when it is energized.
Do not use this for braking the motor in motion.)

| | |
|---|---|
| Static friction torque (N·m) | 24.5 or more |
| Engaging time (ms) | 80 or less |
| Releasing time (ms) Note)4 | 25 or less |
| Exciting current (DC) (A) | 1.3±10 % |
| Releasing voltage (DC) (V) | 2 or more |
| Exciting voltage (DC) (V) | 24±2.4 |

• **Permissible load** (For details, refer to P.183)

| | | |
|---|---|---|
| During assembly | Radial load P-direction (N) | 1666 |
| | Thrust load A-direction (N) | 784 |
| | Thrust load B-direction (N) | 980 |
| During operation | Radial load P-direction (N) | 784 |
| | Thrust load A, B-direction (N) | 343 |

• For details of Note 1 to Note 5, refer to P.182, P.183.
• Dimensions of Driver, refer to P.45.
*1 Motor specifications: □
*2 The product that the end of driver model designation has "E" is "Position control type". Detail of model designation, refer to P.152.

## Torque characteristics (at AC200 V of power voltage <Dotted line represents the torque at 10 % less supply voltage.>)

With oil seal

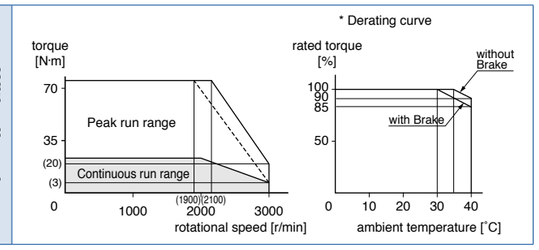


## Dimensions

Mass: Without brake/ 18.6 kg
With brake/ 21.8 kg

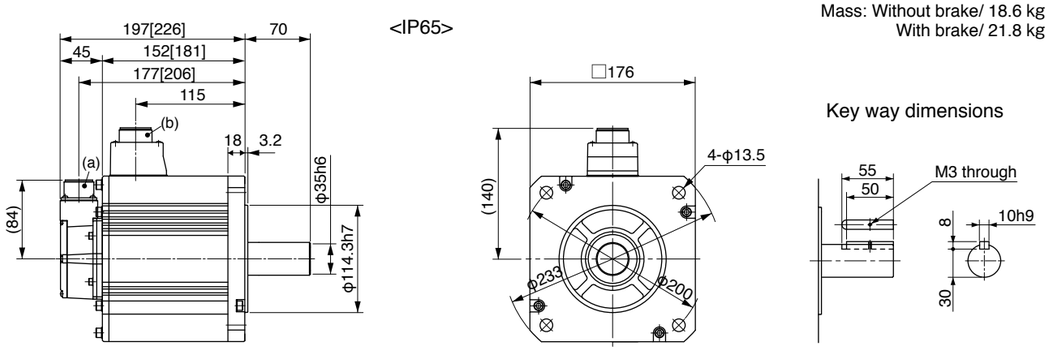


(a) Encoder connector
(b) Motor/Brake connector

* Figures in [ ] represent the dimensions with brake.

[Unit: mm]

**<Cautions>** Reduce the moment of inertia ratio if high speed response operation is required.
Dimensions are subject to change without notice. Contact us or a dealer for the latest information.
Read the Instruction Manual carefully and understand all precautions and remarks before using the products.
Please avoid the motor, or equipment containing the motor to be distributed to Japan, or other regions through Japan.



Special Order Product

# 200 V MGME 0.9 kW [Middle inertia, Middle capacity]



• Please contact us for more information.

## Specifications

| | | | AC200 V | |
|---|---|---|---|---|
| Motor model *1 | IP65 | | MGME092GC□M | MGME092SC□M |
| | IP67 | | – | – |
| Applicable driver *2 | Model No. | A5Ⅱ series | MDDKT5540 | |
| | | A5ⅡE series | MDDKT5540E | – |
| | Frame symbol | | D-frame | |
| Power supply capacity (kVA) | | | 1.8 | |
| Rated output (W) | | | 900 | |
| Rated torque (N·m) | | | 8.59 | |
| Momentary Max. peak torque (N·m) | | | 19.3 | |
| Rated current (A(rms)) | | | 7.6 | |
| Max. current (A(o-p)) | | | 24 | |
| Regenerative brake frequency (times/min) Note)1 | Without option | | No limit Note)2 | |
| | DV0P4284 | | No limit Note)2 | |
| Rated rotational speed (r/min) | | | 1000 | |
| Max. rotational speed (r/min) | | | 2000 | |
| Moment of inertia of rotor ($\times10^{-4}$ kg·m$^2$) | Without brake | | 6.70 | |
| | With brake | | 7.99 | |
| Recommended moment of inertia ratio of the load and the rotor Note)3 | | | 10 times or less | |
| Rotary encoder specifications Note)5 | | | 20-bit Incremental | 17-bit Absolute |
| | Resolution per single turn | | 1048576 | 131072 |

• **Brake specifications** (For details, refer to P.183)
(This brake will be released when it is energized.
Do not use this for braking the motor in motion.)

| | |
|---|---|
| Static friction torque (N·m) | 13.7 or more |
| Engaging time (ms) | 100 or less |
| Releasing time (ms) Note)4 | 50 or less |
| Exciting current (DC) (A) | 0.79±10 % |
| Releasing voltage (DC) (V) | 2 or more |
| Exciting voltage (DC) (V) | 24±2.4 |

• **Permissible load** (For details, refer to P.183)

| | | |
|---|---|---|
| During assembly | Radial load P-direction (N) | 980 |
| | Thrust load A-direction (N) | 588 |
| | Thrust load B-direction (N) | 686 |
| During operation | Radial load P-direction (N) | 686 |
| | Thrust load A, B-direction (N) | 196 |

• For details of Note 1 to Note 5, refer to P.182, P.183.
• Dimensions of Driver, refer to P.43.
*1 Motor specifications: □
*2 The product that the end of driver model designation has "E" is "Position control type". Detail of model designation, refer to P.152.

## Torque characteristics (at AC200 V of power voltage <Dotted line represents the torque at 10 % less supply voltage.>)

With oil seal

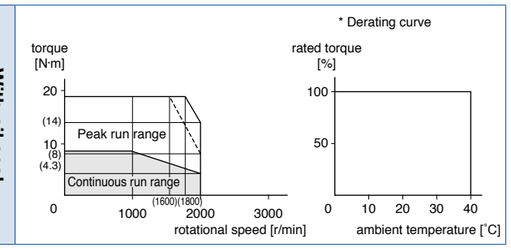


## Dimensions

Mass: Without brake/ 6.7 kg
With brake/ 8.2 kg

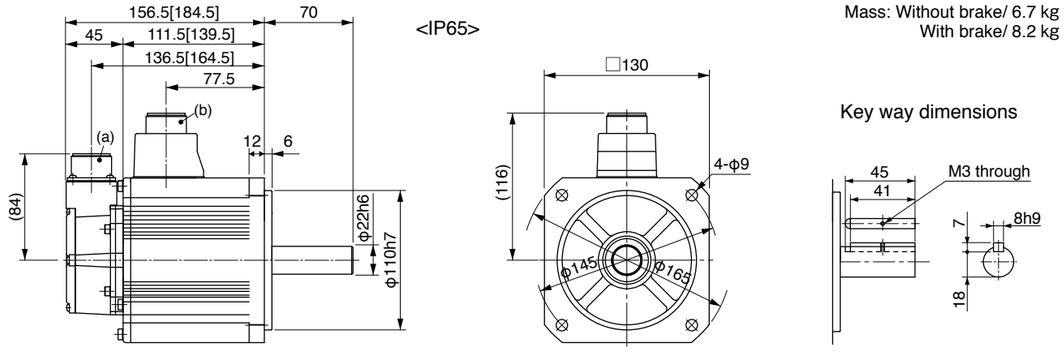


(a) Encoder connector
(b) Motor/Brake connector

* Figures in [ ] represent the dimensions with brake.

[Unit: mm]

**<Cautions>** Reduce the moment of inertia ratio if high speed response operation is required.
Dimensions are subject to change without notice. Contact us or a dealer for the latest information.
Read the Instruction Manual carefully and understand all precautions and remarks before using the products.
Please avoid the motor, or equipment containing the motor to be distributed to Japan, or other regions through Japan.

Special Order Product

# 200 V MGME 2.0 kW [Middle inertia, Middle capacity]

• Please contact us for more information.

## Specifications

| | | | AC200 V | |
|---|---|---|---|---|
| Motor model *1 | IP65 | | MGME202GC□M | MGME202SC□M |
| | IP67 | | – | – |
| Applicable driver *2 | Model No. | A5Ⅱ series | MFDKTA390 | |
| | | A5ⅡE series | MFDKTA390E | – |
| | Frame symbol | | F-frame | |
| Power supply capacity (kVA) | | | 3.8 | |
| Rated output (W) | | | 2000 | |
| Rated torque (N·m) | | | 19.1 | |
| Momentary Max. peak torque (N·m) | | | 47.7 | |
| Rated current (A(rms)) | | | 17.0 | |
| Max. current (A(o-p)) | | | 60 | |
| Regenerative brake frequency (times/min) Note)1 | Without option | | No limit Note)2 | |
| | DV0P4285×2 | | No limit Note)2 | |
| Rated rotational speed (r/min) | | | 1000 | |
| Max. rotational speed (r/min) | | | 2000 | |
| Moment of inertia of rotor ($\times 10^{-4}$ kg·m$^2$) | Without brake | | 30.3 | |
| | With brake | | 31.4 | |
| Recommended moment of inertia ratio of the load and the rotor Note)3 | | | 10 times or less | |
| Rotary encoder specifications Note)5 | | | 20-bit Incremental | 17-bit Absolute |
| | Resolution per single turn | | 1048576 | 131072 |

• **Brake specifications** (For details, refer to P.183)
(This brake will be released when it is energized.
Do not use this for braking the motor in motion.)

| | |
|---|---|
| Static friction torque (N·m) | 24.5 or more |
| Engaging time (ms) | 80 or less |
| Releasing time (ms) Note)4 | 25 or less |
| Exciting current (DC) (A) | 1.3±10 % |
| Releasing voltage (DC) (V) | 2 or more |
| Exciting voltage (DC) (V) | 24±2.4 |

• **Permissible load** (For details, refer to P.183)

| | | |
|---|---|---|
| During assembly | Radial load P-direction (N) | 1666 |
| | Thrust load A-direction (N) | 784 |
| | Thrust load B-direction (N) | 980 |
| During operation | Radial load P-direction (N) | 1176 |
| | Thrust load A, B-direction (N) | 490 |

• For details of Note 1 to Note 5, refer to P.182, P.183.
• Dimensions of Driver, refer to P.45.
*1 Motor specifications: □
*2 The product that the end of driver model designation has "E" is "Position control type". Detail of model designation, refer to P.152.

## Torque characteristics (at AC200 V of power voltage <Dotted line represents the torque at 10 % less supply voltage.>)

With oil seal

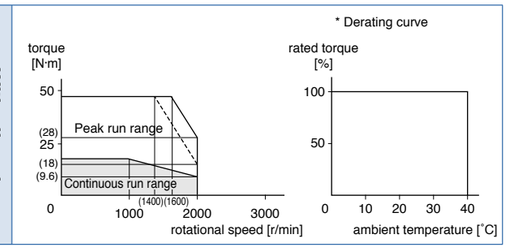


## Dimensions

Mass: Without brake/ 14.0 kg
With brake/ 17.5 kg

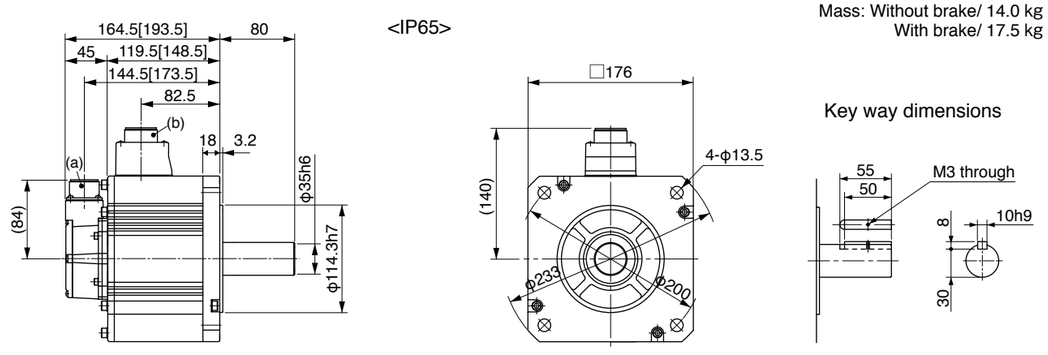


(a) Encoder connector
(b) Motor/Brake connector

* Figures in [ ] represent the dimensions with brake.

[Unit: mm]

**<Cautions>** Reduce the moment of inertia ratio if high speed response operation is required.
Dimensions are subject to change without notice. Contact us or a dealer for the latest information.
Read the Instruction Manual carefully and understand all precautions and remarks before using the products.
Please avoid the motor, or equipment containing the motor to be distributed to Japan, or other regions through Japan.



Special Order Product

# 200 V MGME 3.0 kW [Middle inertia, Middle capacity]



• Please contact us for more information.

## Specifications

| | | | AC200 V | |
|---|---|---|---|---|
| Motor model *1 | IP65 | | MGME302GC□M | MGME302SC□M |
| | IP67 | | – | – |
| Applicable driver *2 | Model No. | A5Ⅱ series | MFDKTB3A2 | |
| | | A5ⅡE series | MFDKTB3A2E | – |
| | Frame symbol | | F-frame | |
| Power supply capacity (kVA) | | | 4.5 | |
| Rated output (W) | | | 3000 | |
| Rated torque (N·m) | | | 28.7 | |
| Momentary Max. peak torque (N·m) | | | 71.7 | |
| Rated current (A(rms)) | | | 22.6 | |
| Max. current (A(o-p)) | | | 80 | |
| Regenerative brake frequency (times/min) Note)1 | Without option | | No limit Note)2 | |
| | DV0P4285×2 | | No limit Note)2 | |
| Rated rotational speed (r/min) | | | 1000 | |
| Max. rotational speed (r/min) | | | 2000 | |
| Moment of inertia of rotor ($\times 10^{-4}$ kg·m$^2$) | Without brake | | 48.4 | |
| | With brake | | 49.2 | |
| Recommended moment of inertia ratio of the load and the rotor Note)3 | | | 10 times or less | |
| Rotary encoder specifications Note)5 | | | 20-bit Incremental | 17-bit Absolute |
| | Resolution per single turn | | 1048576 | 131072 |

• **Brake specifications** (For details, refer to P.183)
(This brake will be released when it is energized.
Do not use this for braking the motor in motion.)

| | |
|---|---|
| Static friction torque (N·m) | 58.8 or more |
| Engaging time (ms) | 150 or less |
| Releasing time (ms) Note)4 | 50 or less |
| Exciting current (DC) (A) | 1.4±10 % |
| Releasing voltage (DC) (V) | 2 or more |
| Exciting voltage (DC) (V) | 24±2.4 |

• **Permissible load** (For details, refer to P.183)

| | | |
|---|---|---|
| During assembly | Radial load P-direction (N) | 2058 |
| | Thrust load A-direction (N) | 980 |
| | Thrust load B-direction (N) | 1176 |
| During operation | Radial load P-direction (N) | 1470 |
| | Thrust load A, B-direction (N) | 490 |

• For details of Note 1 to Note 5, refer to P.182, P.183.
• Dimensions of Driver, refer to P.45.
*1 Motor specifications: □
*2 The product that the end of driver model designation has "E" is "Position control type". Detail of model designation, refer to P.152.

## Torque characteristics (at AC200 V of power voltage <Dotted line represents the torque at 10 % less supply voltage.>)

With oil seal

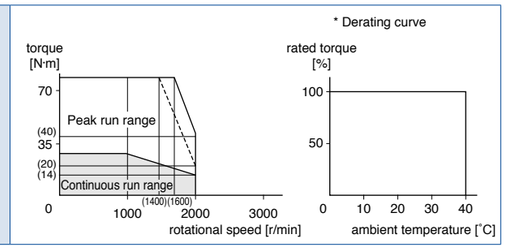


## Dimensions

Mass: Without brake/ 20.0 kg
With brake/ 23.5 kg

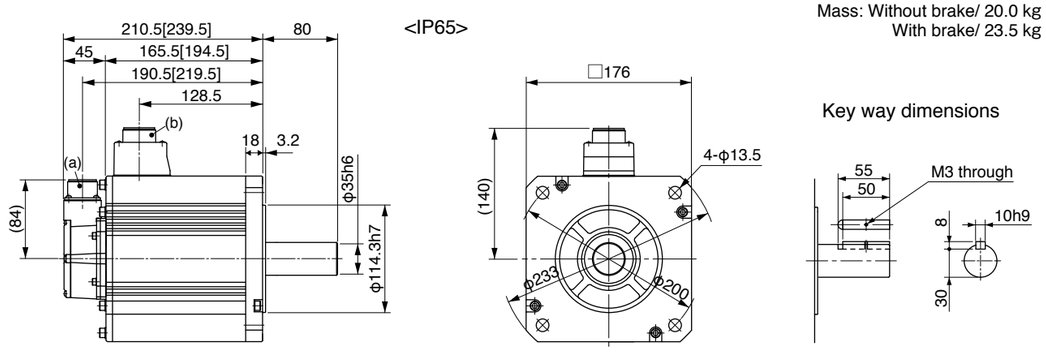


(a) Encoder connector
(b) Motor/Brake connector

* Figures in [ ] represent the dimensions with brake.

[Unit: mm]

**<Cautions>** Reduce the moment of inertia ratio if high speed response operation is required.
Dimensions are subject to change without notice. Contact us or a dealer for the latest information.
Read the Instruction Manual carefully and understand all precautions and remarks before using the products.
Please avoid the motor, or equipment containing the motor to be distributed to Japan, or other regions through Japan.

Special Order Product

# 200 V MHMJ 200 W [High inertia, Small capacity]

• Please contact us for more information.

## Specifications

| | | | AC200 V | |
|---|---|---|---|---|
| Motor model *1 | IP65 | | MHMJ022G1□ | MHMJ022S1□ |
| | IP67 | | – | – |
| Applicable driver *2 | Model No. | A5Ⅱ series | MADKT1507 | |
| | | A5ⅡE series | MADKT1507E | – |
| | Frame symbol | | A-frame | |
| Power supply capacity (kVA) | | | 0.5 | |
| Rated output (W) | | | 200 | |
| Rated torque (N·m) | | | 0.64 | |
| Momentary Max. peak torque (N·m) | | | 1.91 | |
| Rated current (A(rms)) | | | 1.6 | |
| Max. current (A(o-p)) | | | 6.9 | |
| Regenerative brake frequency (times/min) Note)1 | Without option | | No limit Note)2 | |
| | DV0P4283 | | No limit Note)2 | |
| Rated rotational speed (r/min) | | | 3000 | |
| Max. rotational speed (r/min) | | | 5000 | |
| Moment of inertia of rotor ($\times 10^{-4}$ kg·m$^2$) | Without brake | | 0.42 | |
| | With brake | | 0.45 | |
| Recommended moment of inertia ratio of the load and the rotor Note)3 | | | 30 times or less | |
| Rotary encoder specifications Note)5 | | | 20-bit Incremental | 17-bit Absolute |
| | Resolution per single turn | | 1048576 | 131072 |

• **Brake specifications** (For details, refer to P.183)
(This brake will be released when it is energized. Do not use this for braking the motor in motion.)

| | |
|---|---|
| Static friction torque (N·m) | 1.27 or more |
| Engaging time (ms) | 50 or less |
| Releasing time (ms) Note)4 | 15 or less |
| Exciting current (DC) (A) | 0.36 |
| Releasing voltage (DC) (V) | 1 or more |
| Exciting voltage (DC) (V) | 24±1.2 |

• **Permissible load** (For details, refer to P.183)

| | | |
|---|---|---|
| During assembly | Radial load P-direction (N) | 392 |
| | Thrust load A-direction (N) | 147 |
| | Thrust load B-direction (N) | 196 |
| During operation | Radial load P-direction (N) | 245 |
| | Thrust load A, B-direction (N) | 98 |

• For details of Note 1 to Note 5, refer to P.182, P.183.
• Dimensions of Driver, refer to P.42.
*1 Motor specifications: □
*2 The product that the end of driver model designation has "E" is "Position control type". Detail of model designation, refer to P.152.

## Torque characteristics (at AC200 V of power voltage <Dotted line represents the torque at 10 % less supply voltage.>)

Without oil seal

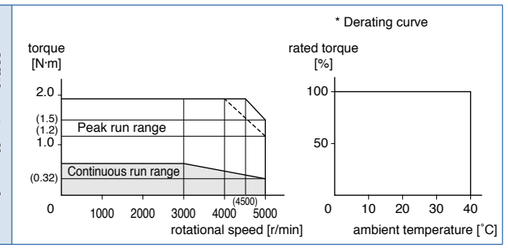


With oil seal

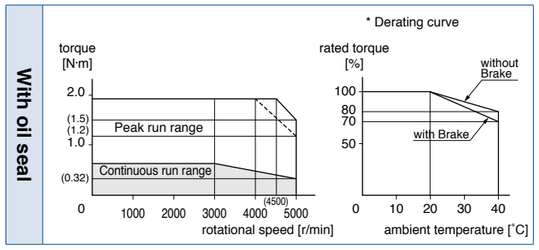


## Dimensions

Mass: Without brake/ 0.96 kg
With brake/ 1.4 kg

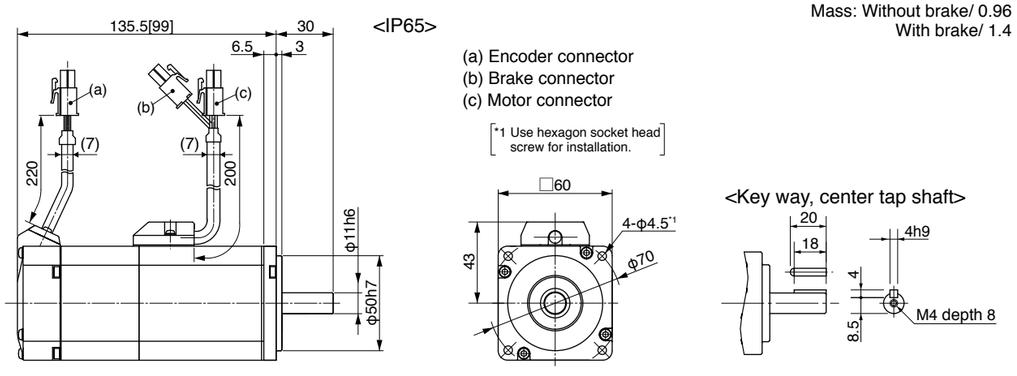


* Figures in [ ] represent the dimensions without brake.

[Unit: mm]

**<Cautions>** Reduce the moment of inertia ratio if high speed response operation is required.
Dimensions are subject to change without notice. Contact us or a dealer for the latest information.
Read the Instruction Manual carefully and understand all precautions and remarks before using the products.
Please avoid the motor, or equipment containing the motor to be distributed to Japan, or other regions through Japan.



Special Order Product

# 200 V MHMJ 400 W [High inertia, Small capacity]



• Please contact us for more information.

## Specifications

| | | | AC200 V | |
|---|---|---|---|---|
| Motor model *1 | IP65 | | MHMJ042G1□ | MHMJ042S1□ |
| | IP67 | | – | – |
| Applicable driver *2 | Model No. | A5Ⅱ series | MBDKT2510 | |
| | | A5ⅡE series | MBDKT2510E | – |
| | Frame symbol | | B-frame | |
| Power supply capacity (kVA) | | | 0.9 | |
| Rated output (W) | | | 400 | |
| Rated torque (N·m) | | | 1.3 | |
| Momentary Max. peak torque (N·m) | | | 3.8 | |
| Rated current (A(rms)) | | | 2.6 | |
| Max. current (A(o-p)) | | | 11.0 | |
| Regenerative brake frequency (times/min) Note)1 | Without option | | No limit Note)2 | |
| | DV0P4283 | | No limit Note)2 | |
| Rated rotational speed (r/min) | | | 3000 | |
| Max. rotational speed (r/min) | | | 5000 | |
| Moment of inertia of rotor ($\times 10^{-4}$ kg·m$^2$) | Without brake | | 0.67 | |
| | With brake | | 0.70 | |
| Recommended moment of inertia ratio of the load and the rotor Note)3 | | | 30 times or less | |
| Rotary encoder specifications Note)5 | | | 20-bit Incremental | 17-bit Absolute |
| | Resolution per single turn | | 1048576 | 131072 |

• **Brake specifications** (For details, refer to P.183)
(This brake will be released when it is energized. Do not use this for braking the motor in motion.)

| | |
|---|---|
| Static friction torque (N·m) | 1.27 or more |
| Engaging time (ms) | 50 or less |
| Releasing time (ms) Note)4 | 15 or less |
| Exciting current (DC) (A) | 0.36 |
| Releasing voltage (DC) (V) | 1 or more |
| Exciting voltage (DC) (V) | 24±1.2 |

• **Permissible load** (For details, refer to P.183)

| | | |
|---|---|---|
| During assembly | Radial load P-direction (N) | 392 |
| | Thrust load A-direction (N) | 147 |
| | Thrust load B-direction (N) | 196 |
| During operation | Radial load P-direction (N) | 245 |
| | Thrust load A, B-direction (N) | 98 |

• For details of Note 1 to Note 5, refer to P.182, P.183.
• Dimensions of Driver, refer to P.42.
*1 Motor specifications: □
*2 The product that the end of driver model designation has "E" is "Position control type". Detail of model designation, refer to P.152.

## Torque characteristics (at AC200 V of power voltage <Dotted line represents the torque at 10 % less supply voltage.>)

Without oil seal

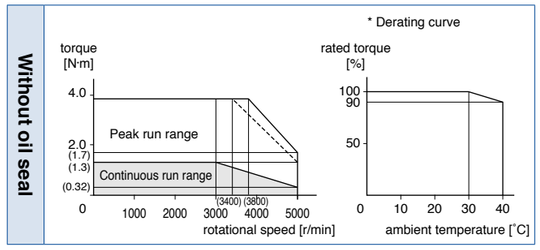


With oil seal

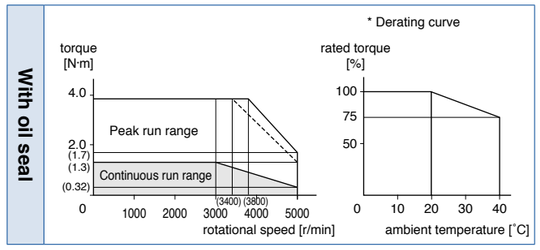


## Dimensions

Mass: Without brake/ 1.4 kg
With brake/ 1.8 kg

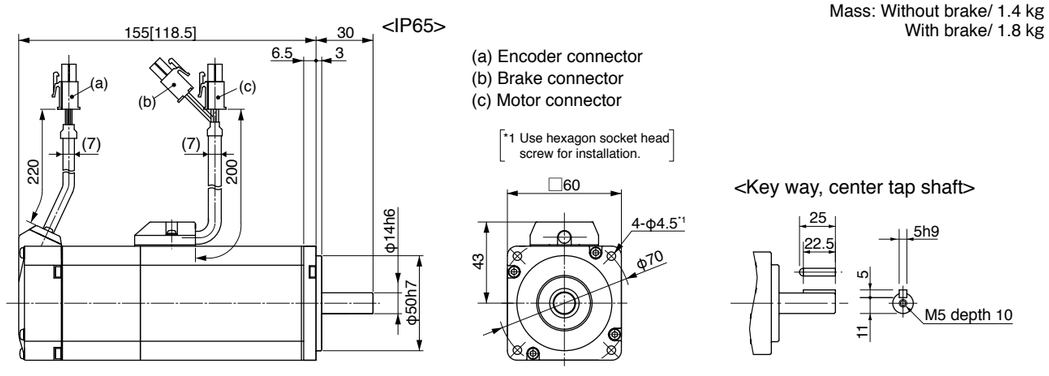


* Figures in [ ] represent the dimensions without brake.

[Unit: mm]

**<Cautions>** Reduce the moment of inertia ratio if high speed response operation is required.
Dimensions are subject to change without notice. Contact us or a dealer for the latest information.
Read the Instruction Manual carefully and understand all precautions and remarks before using the products.
Please avoid the motor, or equipment containing the motor to be distributed to Japan, or other regions through Japan.

Special Order Product

# 200 V MHMJ 750 W [High inertia, Small capacity]

• Please contact us for more information.

## Specifications

| | | | AC200 V | |
|---|---|---|---|---|
| Motor model *1 | IP65 | | MHMJ082G1□ | MHMJ082S1□ |
| | IP67 | | – | – |
| Applicable driver *2 | Model No. | A5Ⅱ series | MCDKT3520 | |
| | | A5ⅡE series | MCDKT3520E | – |
| | Frame symbol | | C-frame | |
| Power supply capacity (kVA) | | | 1.3 | |
| Rated output (W) | | | 750 | |
| Rated torque (N·m) | | | 2.4 | |
| Momentary Max. peak torque (N·m) | | | 7.1 | |
| Rated current (A(rms)) | | | 4.0 | |
| Max. current (A(o-p)) | | | 17.0 | |
| Regenerative brake frequency (times/min) Note)1 | Without option | | No limit Note)2 | |
| | DV0P4283 | | No limit Note)2 | |
| Rated rotational speed (r/min) | | | 3000 | |
| Max. rotational speed (r/min) | | | 4500 | |
| Moment of inertia of rotor ($\times10^{-4}$ kg·m$^2$) | Without brake | | 1.51 | |
| | With brake | | 1.61 | |
| Recommended moment of inertia ratio of the load and the rotor Note)3 | | | 20 times or less | |
| Rotary encoder specifications Note)5 | | | 20-bit Incremental | 17-bit Absolute |
| | Resolution per single turn | | 1048576 | 131072 |

• **Brake specifications** (For details, refer to P.183)
(This brake will be released when it is energized. Do not use this for braking the motor in motion.)

| | |
|---|---|
| Static friction torque (N·m) | 2.45 or more |
| Engaging time (ms) | 70 or less |
| Releasing time (ms) Note)4 | 20 or less |
| Exciting current (DC) (A) | 0.42 |
| Releasing voltage (DC) (V) | 1 or more |
| Exciting voltage (DC) (V) | 24±1.2 |

• **Permissible load** (For details, refer to P.183)

| | | |
|---|---|---|
| During assembly | Radial load P-direction (N) | 686 |
| | Thrust load A-direction (N) | 294 |
| | Thrust load B-direction (N) | 392 |
| During operation | Radial load P-direction (N) | 392 |
| | Thrust load A, B-direction (N) | 147 |

• For details of Note 1 to Note 5, refer to P.182, P.183.
• Dimensions of Driver, refer to P.43.
*1 Motor specifications: □
*2 The product that the end of driver model designation has "E" is "Position control type". Detail of model designation, refer to P.152.

## Torque characteristics (at AC200 V of power voltage <Dotted line represents the torque at 10 % less supply voltage.>)

Without oil seal

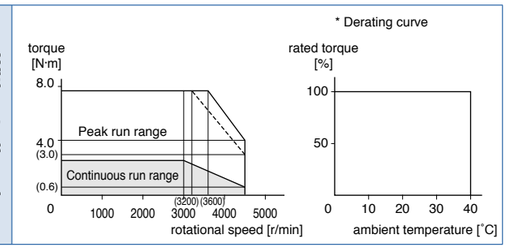


With oil seal

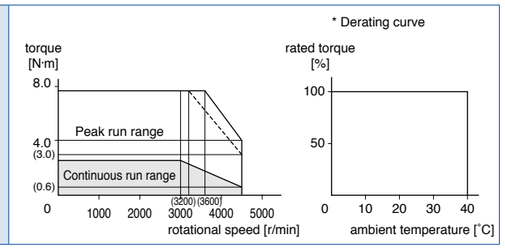


## Dimensions

Mass: Without brake/ 2.5 kg
With brake/ 3.5 kg

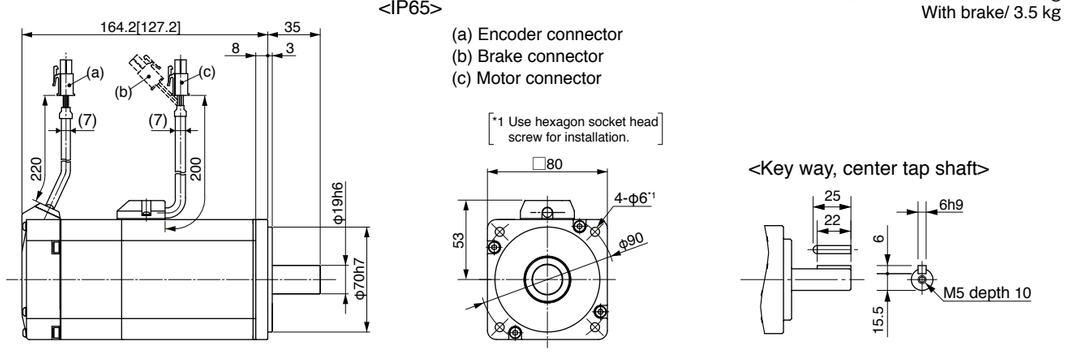


* Figures in [ ] represent the dimensions without brake.

[Unit: mm]

**<Cautions>** Reduce the moment of inertia ratio if high speed response operation is required.
Dimensions are subject to change without notice. Contact us or a dealer for the latest information.
Read the Instruction Manual carefully and understand all precautions and remarks before using the products.
Please avoid the motor, or equipment containing the motor to be distributed to Japan, or other regions through Japan.



Special Order Product

# 200 V MHME 1.0 kW [High inertia, Middle capacity]



• Please contact us for more information.

## Specifications

| | | | AC200 V | |
|---|---|---|---|---|
| Motor model *1 | IP65 | | MHME102GC□M | MHME102SC□M |
| | IP67 | | – | – |
| Applicable driver *2 | Model No. | A5Ⅱ series | MDDKT3530 | |
| | | A5ⅡE series | MDDKT3530E | – |
| | Frame symbol | | D-frame | |
| Power supply capacity (kVA) | | | 1.8 | |
| Rated output (W) | | | 1000 | |
| Rated torque (N·m) | | | 4.77 | |
| Momentary Max. peak torque (N·m) | | | 14.3 | |
| Rated current (A(rms)) | | | 5.7 | |
| Max. current (A(o-p)) | | | 24 | |
| Regenerative brake frequency (times/min) Note)1 | Without option | | 83 | |
| | DV0P4284 | | No limit Note)2 | |
| Rated rotational speed (r/min) | | | 2000 | |
| Max. rotational speed (r/min) | | | 3000 | |
| Moment of inertia of rotor ($\times10^{-4}$ kg·m$^2$) | Without brake | | 24.7 | |
| | With brake | | 26.0 | |
| Recommended moment of inertia ratio of the load and the rotor Note)3 | | | 5 times or less | |
| Rotary encoder specifications Note)5 | | | 20-bit Incremental | 17-bit Absolute |
| | Resolution per single turn | | 1048576 | 131072 |

• **Brake specifications** (For details, refer to P.183)
(This brake will be released when it is energized. Do not use this for braking the motor in motion.)

| | |
|---|---|
| Static friction torque (N·m) | 4.9 or more |
| Engaging time (ms) | 80 or less |
| Releasing time (ms) Note)4 | 70 or less |
| Exciting current (DC) (A) | 0.59±10 % |
| Releasing voltage (DC) (V) | 2 or more |
| Exciting voltage (DC) (V) | 24±2.4 |

• **Permissible load** (For details, refer to P.183)

| | | |
|---|---|---|
| During assembly | Radial load P-direction (N) | 980 |
| | Thrust load A-direction (N) | 588 |
| | Thrust load B-direction (N) | 686 |
| During operation | Radial load P-direction (N) | 490 |
| | Thrust load A, B-direction (N) | 196 |

• For details of Note 1 to Note 5, refer to P.182, P.183.
• Dimensions of Driver, refer to P.43.
*1 Motor specifications: □
*2 The product that the end of driver model designation has "E" is "Position control type". Detail of model designation, refer to P.152.

## Torque characteristics (at AC200 V of power voltage <Dotted line represents the torque at 10 % less supply voltage.>)

With oil seal

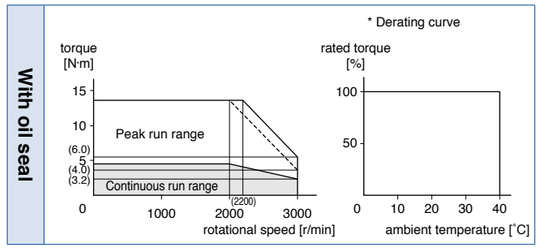


## Dimensions

Mass: Without brake/ 6.7 kg
With brake/ 8.1 kg

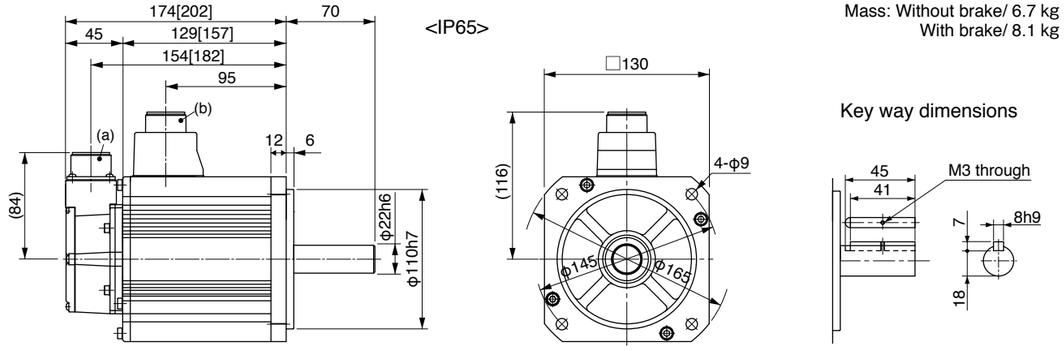


(a) Encoder connector
(b) Motor/Brake connector

* Figures in [ ] represent the dimensions with brake.

[Unit: mm]

**<Cautions>** Reduce the moment of inertia ratio if high speed response operation is required.
Dimensions are subject to change without notice. Contact us or a dealer for the latest information.
Read the Instruction Manual carefully and understand all precautions and remarks before using the products.
Please avoid the motor, or equipment containing the motor to be distributed to Japan, or other regions through Japan.

Special Order Product

# 200 V MHME 1.5 kW [High inertia, Middle capacity]

• Please contact us for more information.

## Specifications

| | | | AC200 V | |
|---|---|---|---|---|
| Motor model *1 | IP65 | | MHME152GC□M | MHME152SC□M |
| | IP67 | | – | – |
| Applicable driver *2 | Model No. | A5Ⅱ series | MDDKT5540 | |
| | | A5ⅡE series | MDDKT5540E | – |
| | Frame symbol | | D-frame | |
| Power supply capacity (kVA) | | | 2.3 | |
| Rated output (W) | | | 1500 | |
| Rated torque (N·m) | | | 7.16 | |
| Momentary Max. peak torque (N·m) | | | 21.5 | |
| Rated current (A(rms)) | | | 9.4 | |
| Max. current (A(o-p)) | | | 40 | |
| Regenerative brake frequency (times/min) Note)1 | Without option | | 22 | |
| | DV0P4284 | | 130 | |
| Rated rotational speed (r/min) | | | 2000 | |
| Max. rotational speed (r/min) | | | 3000 | |
| Moment of inertia of rotor ($\times10^{-4}$ kg·m$^2$) | Without brake | | 37.1 | |
| | With brake | | 38.4 | |
| Recommended moment of inertia ratio of the load and the rotor Note)3 | | | 5 times or less | |
| Rotary encoder specifications Note)5 | | | 20-bit Incremental | 17-bit Absolute |
| | Resolution per single turn | | 1048576 | 131072 |

• **Brake specifications** (For details, refer to P.183)
(This brake will be released when it is energized. Do not use this for braking the motor in motion.)

| | |
|---|---|
| Static friction torque (N·m) | 13.7 or more |
| Engaging time (ms) | 100 or less |
| Releasing time (ms) Note)4 | 50 or less |
| Exciting current (DC) (A) | 0.79±10 % |
| Releasing voltage (DC) (V) | 2 or more |
| Exciting voltage (DC) (V) | 24±2.4 |

• **Permissible load** (For details, refer to P.183)

| | | |
|---|---|---|
| During assembly | Radial load P-direction (N) | 980 |
| | Thrust load A-direction (N) | 588 |
| | Thrust load B-direction (N) | 686 |
| During operation | Radial load P-direction (N) | 490 |
| | Thrust load A, B-direction (N) | 196 |

• For details of Note 1 to Note 5, refer to P.182, P.183.
• Dimensions of Driver, refer to P.43.
*1 Motor specifications: □
*2 The product that the end of driver model designation has "E" is "Position control type". Detail of model designation, refer to P.152.

## Torque characteristics (at AC200 V of power voltage <Dotted line represents the torque at 10 % less supply voltage.>)

With oil seal

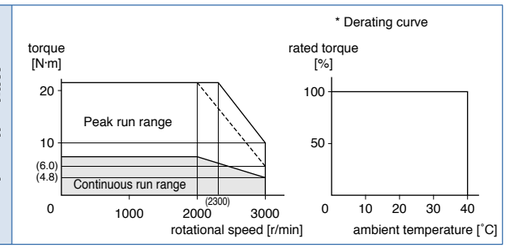


## Dimensions

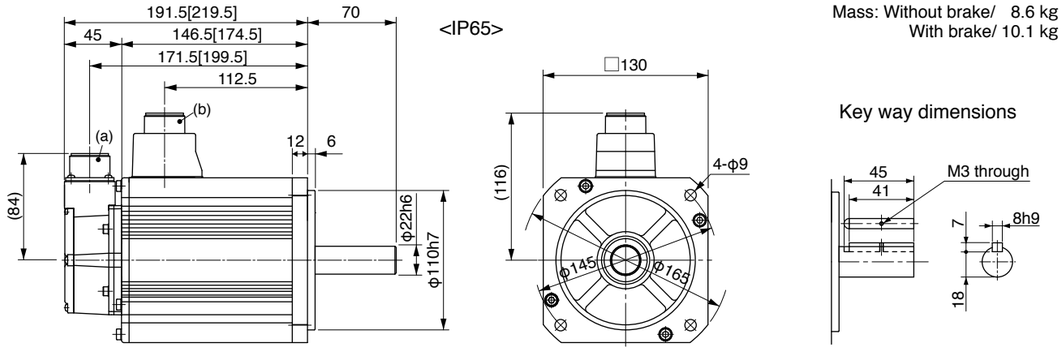


Mass: Without brake/ 8.6 kg
With brake/ 10.1 kg

(a) Encoder connector
(b) Motor/Brake connector

* Figures in [ ] represent the dimensions with brake.

[Unit: mm]

**<Cautions>** Reduce the moment of inertia ratio if high speed response operation is required.
Dimensions are subject to change without notice. Contact us or a dealer for the latest information.
Read the Instruction Manual carefully and understand all precautions and remarks before using the products.
Please avoid the motor, or equipment containing the motor to be distributed to Japan, or other regions through Japan.



Special Order Product

# 200 V MHME 2.0 kW [High inertia, Middle capacity]



• Please contact us for more information.

## Specifications

| | | | AC200 V | |
|---|---|---|---|---|
| Motor model *1 | IP65 | | MHME202GC□M | MHME202SC□M |
| | IP67 | | – | – |
| Applicable driver *2 | Model No. | A5Ⅱ series | MEDKT7364 | |
| | | A5ⅡE series | MEDKT7364E | – |
| | Frame symbol | | E-frame | |
| Power supply capacity (kVA) | | | 3.3 | |
| Rated output (W) | | | 2000 | |
| Rated torque (N·m) | | | 9.55 | |
| Momentary Max. peak torque (N·m) | | | 28.6 | |
| Rated current (A(rms)) | | | 11.1 | |
| Max. current (A(o-p)) | | | 47 | |
| Regenerative brake frequency (times/min) Note)1 | Without option | | 45 | |
| | DV0P4285 | | 142 | |
| Rated rotational speed (r/min) | | | 2000 | |
| Max. rotational speed (r/min) | | | 3000 | |
| Moment of inertia of rotor ($\times10^{-4}$ kg·m$^2$) | Without brake | | 57.8 | |
| | With brake | | 59.6 | |
| Recommended moment of inertia ratio of the load and the rotor Note)3 | | | 5 times or less | |
| Rotary encoder specifications Note)5 | | | 20-bit Incremental | 17-bit Absolute |
| | Resolution per single turn | | 1048576 | 131072 |

• **Brake specifications** (For details, refer to P.183)
(This brake will be released when it is energized. Do not use this for braking the motor in motion.)

| | |
|---|---|
| Static friction torque (N·m) | 24.5 or more |
| Engaging time (ms) | 80 or less |
| Releasing time (ms) Note)4 | 25 or less |
| Exciting current (DC) (A) | 1.3±10 % |
| Releasing voltage (DC) (V) | 2 or more |
| Exciting voltage (DC) (V) | 24±2.4 |

• **Permissible load** (For details, refer to P.183)

| | | |
|---|---|---|
| During assembly | Radial load P-direction (N) | 1666 |
| | Thrust load A-direction (N) | 784 |
| | Thrust load B-direction (N) | 980 |
| During operation | Radial load P-direction (N) | 784 |
| | Thrust load A, B-direction (N) | 343 |

• For details of Note 1 to Note 5, refer to P.182, P.183.
• Dimensions of Driver, refer to P.43.
*1 Motor specifications: □
*2 The product that the end of driver model designation has "E" is "Position control type". Detail of model designation, refer to P.152.

## Torque characteristics (at AC200 V of power voltage <Dotted line represents the torque at 10 % less supply voltage.>)

With oil seal

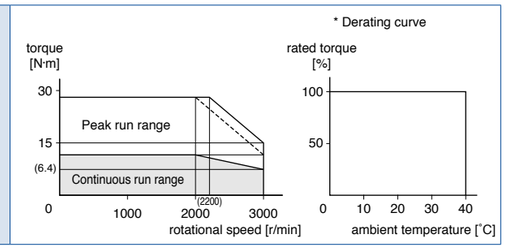


## Dimensions

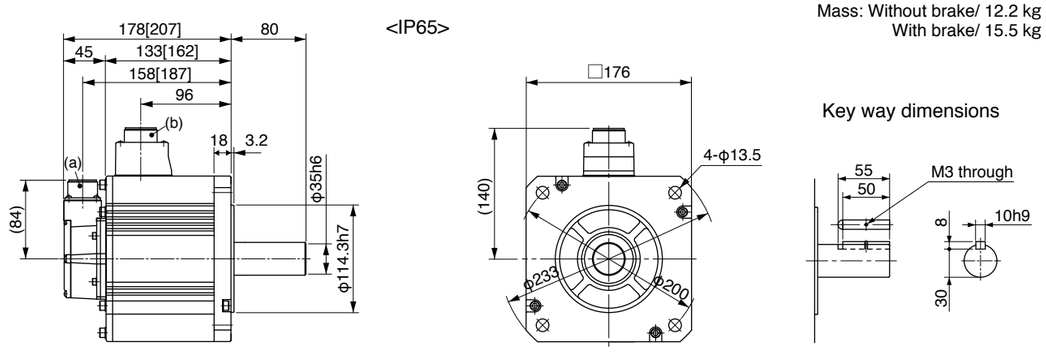


Mass: Without brake/ 12.2 kg
With brake/ 15.5 kg

(a) Encoder connector
(b) Motor/Brake connector

* Figures in [ ] represent the dimensions with brake.

[Unit: mm]

**<Cautions>** Reduce the moment of inertia ratio if high speed response operation is required.
Dimensions are subject to change without notice. Contact us or a dealer for the latest information.
Read the Instruction Manual carefully and understand all precautions and remarks before using the products.
Please avoid the motor, or equipment containing the motor to be distributed to Japan, or other regions through Japan.

Special Order Product

# 200 V MHME 3.0 kW [High inertia, Middle capacity]

• Please contact us for more information.

## Specifications

| | | | AC200 V | |
|---|---|---|---|---|
| Motor model *1 | IP65 | | MHME302GC□M | MHME302SC□M |
| | IP67 | | – | – |
| Applicable driver *2 | Model No. | A5Ⅱ series | MFDKTA390 | |
| | | A5ⅡE series | MFDKTA390E | – |
| | Frame symbol | | F-frame | |
| Power supply capacity (kVA) | | | 4.5 | |
| Rated output (W) | | | 3000 | |
| Rated torque (N·m) | | | 14.3 | |
| Momentary Max. peak torque (N·m) | | | 43.0 | |
| Rated current (A(rms)) | | | 16.0 | |
| Max. current (A(o-p)) | | | 68 | |
| Regenerative brake frequency (times/min) Note)1 | Without option | | 19 | |
| | DV0P4285×2 | | 142 | |
| Rated rotational speed (r/min) | | | 2000 | |
| Max. rotational speed (r/min) | | | 3000 | |
| Moment of inertia of rotor ($\times10^{-4}$ kg·m$^2$) | Without brake | | 90.5 | |
| | With brake | | 92.1 | |
| Recommended moment of inertia ratio of the load and the rotor Note)3 | | | 5 times or less | |
| Rotary encoder specifications Note)5 | | | 20-bit Incremental | 17-bit Absolute |
| | Resolution per single turn | | 1048576 | 131072 |

• **Brake specifications** (For details, refer to P.183)
(This brake will be released when it is energized.
Do not use this for braking the motor in motion.)

| | |
|---|---|
| Static friction torque (N·m) | 24.5 or more |
| Engaging time (ms) | 80 or less |
| Releasing time (ms) Note)4 | 25 or less |
| Exciting current (DC) (A) | 1.3±10 % |
| Releasing voltage (DC) (V) | 2 or more |
| Exciting voltage (DC) (V) | 24±2.4 |

• **Permissible load** (For details, refer to P.183)

| | | |
|---|---|---|
| During assembly | Radial load P-direction (N) | 1666 |
| | Thrust load A-direction (N) | 784 |
| | Thrust load B-direction (N) | 980 |
| During operation | Radial load P-direction (N) | 784 |
| | Thrust load A, B-direction (N) | 343 |

• For details of Note 1 to Note 5, refer to P.182, P.183.
• Dimensions of Driver, refer to P.45.
*1 Motor specifications: □
*2 The product that the end of driver model designation has "E" is "Position control type". Detail of model designation, refer to P.152.

## Torque characteristics (at AC200 V of power voltage <Dotted line represents the torque at 10 % less supply voltage.>)

With oil seal

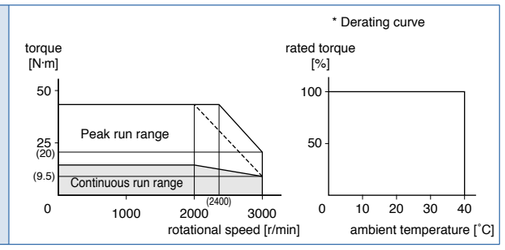


## Dimensions

Mass: Without brake/ 16.0 kg
With brake/ 19.2 kg

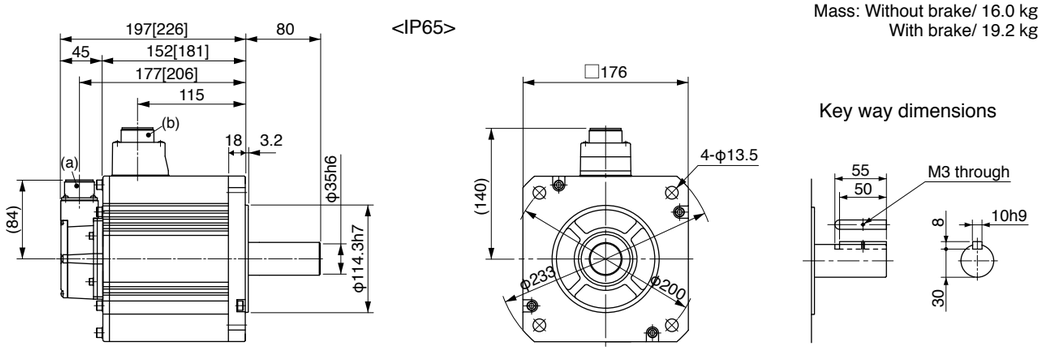


(a) Encoder connector
(b) Motor/Brake connector

* Figures in [ ] represent the dimensions with brake.

[Unit: mm]

**<Cautions>** Reduce the moment of inertia ratio if high speed response operation is required.
Dimensions are subject to change without notice. Contact us or a dealer for the latest information.
Read the Instruction Manual carefully and understand all precautions and remarks before using the products.
Please avoid the motor, or equipment containing the motor to be distributed to Japan, or other regions through Japan.



Special Order Product

# 200 V MHME 4.0 kW [High inertia, Middle capacity]



• Please contact us for more information.

## Specifications

| | | | AC200 V | |
|---|---|---|---|---|
| Motor model *1 | IP65 | | MHME402GC□M | MHME402SC□M |
| | IP67 | | – | – |
| Applicable driver *2 | Model No. | A5Ⅱ series | MFDKTB3A2 | |
| | | A5ⅡE series | MFDKTB3A2E | – |
| | Frame symbol | | F-frame | |
| Power supply capacity (kVA) | | | 6.0 | |
| Rated output (W) | | | 4000 | |
| Rated torque (N·m) | | | 19.1 | |
| Momentary Max. peak torque (N·m) | | | 57.3 | |
| Rated current (A(rms)) | | | 21.0 | |
| Max. current (A(o-p)) | | | 89 | |
| Regenerative brake frequency (times/min) Note)1 | Without option | | 17 | |
| | DV0P4285×2 | | 125 | |
| Rated rotational speed (r/min) | | | 2000 | |
| Max. rotational speed (r/min) | | | 3000 | |
| Moment of inertia of rotor ($\times10^{-4}$ kg·m$^2$) | Without brake | | 112 | |
| | With brake | | 114 | |
| Recommended moment of inertia ratio of the load and the rotor Note)3 | | | 5 times or less | |
| Rotary encoder specifications Note)5 | | | 20-bit Incremental | 17-bit Absolute |
| | Resolution per single turn | | 1048576 | 131072 |

• **Brake specifications** (For details, refer to P.183)
(This brake will be released when it is energized.
Do not use this for braking the motor in motion.)

| | |
|---|---|
| Static friction torque (N·m) | 24.5 or more |
| Engaging time (ms) | 80 or less |
| Releasing time (ms) Note)4 | 25 or less |
| Exciting current (DC) (A) | 1.3±10 % |
| Releasing voltage (DC) (V) | 2 or more |
| Exciting voltage (DC) (V) | 24±2.4 |

• **Permissible load** (For details, refer to P.183)

| | | |
|---|---|---|
| During assembly | Radial load P-direction (N) | 1666 |
| | Thrust load A-direction (N) | 784 |
| | Thrust load B-direction (N) | 980 |
| During operation | Radial load P-direction (N) | 784 |
| | Thrust load A, B-direction (N) | 343 |

• For details of Note 1 to Note 5, refer to P.182, P.183.
• Dimensions of Driver, refer to P.45.
*1 Motor specifications: □
*2 The product that the end of driver model designation has "E" is "Position control type". Detail of model designation, refer to P.152.

## Torque characteristics (at AC200 V of power voltage <Dotted line represents the torque at 10 % less supply voltage.>)

With oil seal

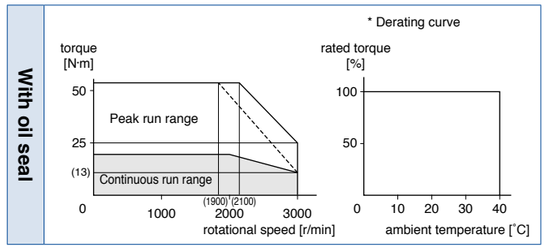


## Dimensions

Mass: Without brake/ 18.6 kg
With brake/ 21.8 kg

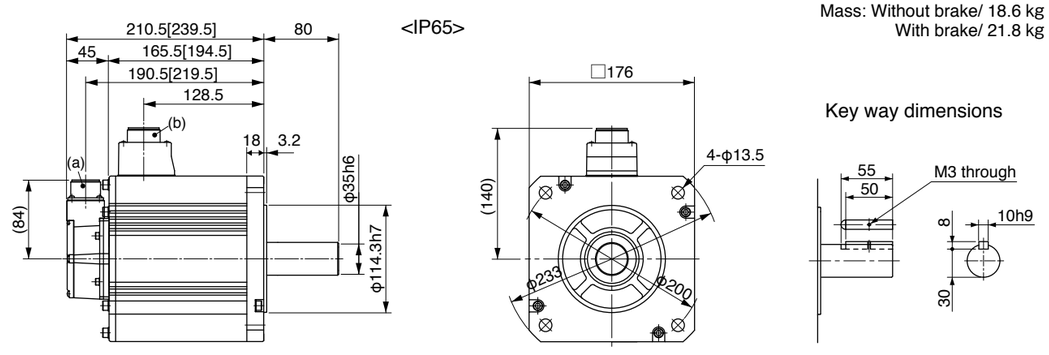


(a) Encoder connector
(b) Motor/Brake connector

* Figures in [ ] represent the dimensions with brake.

[Unit: mm]

**<Cautions>** Reduce the moment of inertia ratio if high speed response operation is required.
Dimensions are subject to change without notice. Contact us or a dealer for the latest information.
Read the Instruction Manual carefully and understand all precautions and remarks before using the products.
Please avoid the motor, or equipment containing the motor to be distributed to Japan, or other regions through Japan.

Special Order Product

# 200 V MHME 5.0 kW [High inertia, Middle capacity]

• Please contact us for more information.

## Specifications

| | | | AC200 V | |
|---|---|---|---|---|
| Motor model *1 | IP65 | | MHME502GC□M | MHME502SC□M |
| | IP67 | | – | – |
| Applicable driver *2 | Model No. | A5Ⅱ series | MFDKTB3A2 | |
| | | A5ⅡE series | MFDKTB3A2E | – |
| | Frame symbol | | F-frame | |
| Power supply capacity (kVA) | | | 7.5 | |
| Rated output (W) | | | 5000 | |
| Rated torque (N·m) | | | 23.9 | |
| Momentary Max. peak torque (N·m) | | | 71.6 | |
| Rated current (A(rms)) | | | 25.9 | |
| Max. current (A(o-p)) | | | 110 | |
| Regenerative brake frequency (times/min) Note)1 | Without option | | 10 | |
| | DV0P4285×2 | | 76 | |
| Rated rotational speed (r/min) | | | 2000 | |
| Max. rotational speed (r/min) | | | 3000 | |
| Moment of inertia of rotor ($\times 10^{-4}$ kg·m$^2$) | Without brake | | 162 | |
| | With brake | | 164 | |
| Recommended moment of inertia ratio of the load and the rotor Note)3 | | | 5 times or less | |
| Rotary encoder specifications Note)5 | | | 20-bit Incremental | 17-bit Absolute |
| | Resolution per single turn | | 1048576 | 131072 |

• **Brake specifications** (For details, refer to P.183)

(This brake will be released when it is energized.
Do not use this for braking the motor in motion.)

| | |
|---|---|
| Static friction torque (N·m) | 24.5 or more |
| Engaging time (ms) | 80 or less |
| Releasing time (ms) Note)4 | 25 or less |
| Exciting current (DC) (A) | 1.3±10 % |
| Releasing voltage (DC) (V) | 2 or more |
| Exciting voltage (DC) (V) | 24±2.4 |

• **Permissible load** (For details, refer to P.183)

| | | |
|---|---|---|
| During assembly | Radial load P-direction (N) | 1666 |
| | Thrust load A-direction (N) | 784 |
| | Thrust load B-direction (N) | 980 |
| During operation | Radial load P-direction (N) | 784 |
| | Thrust load A, B-direction (N) | 343 |

• For details of Note 1 to Note 5, refer to P.182, P.183.
• Dimensions of Driver, refer to P.45.
*1 Motor specifications: □
*2 The product that the end of driver model designation has "E" is "Position control type". Detail of model designation, refer to P.152.

## Torque characteristics (at AC200 V of power voltage <Dotted line represents the torque at 10 % less supply voltage.>)

With oil seal

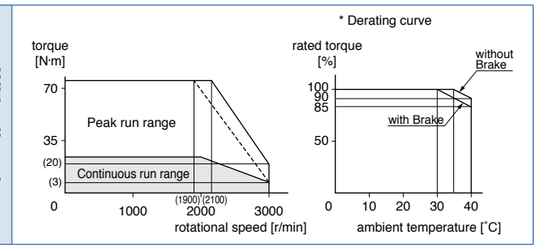


## Dimensions

Mass: Without brake/ 23.0 kg
With brake/ 26.2 kg

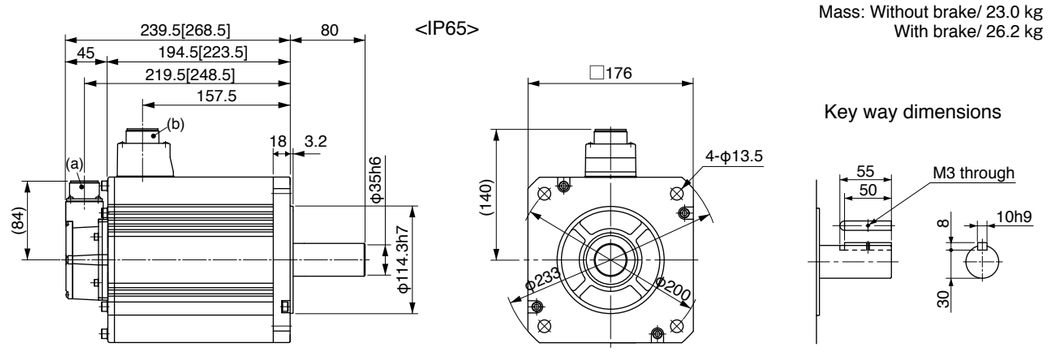


(a) Encoder connector
(b) Motor/Brake connector

* Figures in [ ] represent the dimensions with brake.

[Unit: mm]

**<Cautions>** Reduce the moment of inertia ratio if high speed response operation is required.
Dimensions are subject to change without notice. Contact us or a dealer for the latest information.
Read the Instruction Manual carefully and understand all precautions and remarks before using the products.
Please avoid the motor, or equipment containing the motor to be distributed to Japan, or other regions through Japan.





## Environmental Conditions

| Item | | Conditions |
|---|---|---|
| Ambient temperature *1 | | 0 °C to 40 °C (free from freezing) |
| Ambient humidity | | 20 % to 85 % RH (free from condensation) |
| Storage temperature *2 | | –20 °C to 65 °C (Max.temperature guarantee: 80 °C for 72 hours free from condensation*5) |
| Storage humidity | | 20 % to 85 % RH (free from condensation*5) |
| Vibration | Motor only | 50 W to 5.0 kW : Lower than 49 m/s$^2$ (5 G) at running, 24.5 m/s$^2$ (2.5 G) at stall<br>6.0 kW to 15.0 kW : Lower than 24.5 m/s$^2$ (2.5 G) at running, 24.5 m/s$^2$ (2.5 G) at stall |
| Impact | Motor only | Lower than 98 m/s$^2$ (10 G) |
| Enclosure rating (Motor only) | IP65 *3 | MSMD, MHMD, MSMJ, MHMJ<br>(except rotating portion of output shaft and readwire end.) |
| | | M * ME (IP65 motor: 0.9 kW or more)<br>(except rotating portion of output shaft and connecting pin part of the motor connector and the encoder connector) |
| | IP67 *3*4 | M * ME IP67 motor<br>(except rotating portion of output shaft and connecting pin part of the motor connector and the encoder connector) |
| Altitude | | Lower than 1000 m |

*1 Ambient temperature to be measured at 5 cm away from the motor.
*2 Permissible temperature for short duration such as transportation.
*3 These motors conform to the test conditions specified in EN standards (EN60529, EN60034-5). Do not use these motors in application where water proof performance is required such as continuous wash-down operation.
*4 This condition is applied when the connector mounting screw are tightened to the recommended tightening torque.
*5 Air containing water vapor will become saturated with water vapor as the temperature falls, causing dew.

**<Note>**
Initial setup of rotational direction:
positive = CCW and negative = CW.
Pay an extra attention.

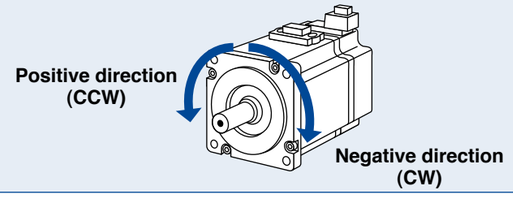


## Notes on [Motor specification] page

Note) 1. **[At AC100 V of power voltage]**
Regenerative brake frequency represents the frequency of the motor's stops from the rated speed with deceleration without load.
• If the load is connected, frequency will be defines as 1/(m+1), where m=load moment of inertia/ rotor moment of inertia.
• When the motor speed exceeds the rated speed, regenerative brake frequency is in inverse proportion to the square of (running speed/rated speed).
• Power supply voltage is AC115 V (at 100 V of the main voltage).
If the supply voltage fluctuates, frequency is in inverse proportion to the square of (Running supply voltage/115) relative to the value in the table.
• When regeneration occurs continuously such cases as running speed frequently changes or vertical feeding, consult us or a dealer.

**[At AC200 V of power voltage]**
Regenerative brake frequency represents the frequency of the motor's stops from the rated speed with deceleration without load.
• If the load is connected, frequency will be defines as 1/(m+1), where m=load moment of inertia/ rotor moment of inertia.
• When the motor speed exceeds the rated speed, regenerative brake frequency is in inverse proportion to the square of (running speed/rated speed).
• Power supply voltage is AC230 V (at 200 V of the main voltage).
If the supply voltage fluctuates, frequency is in inverse proportion to the square of (Running supply voltage/230) relative to the value in the table.
• When regeneration occurs continuously such cases as running speed frequently changes or vertical feeding, consult us or a dealer.

**[At AC400 V of power voltage]**

Regenerative brake frequency represents the frequency of the motor's stops from the rated speed with deceleration without load.

- If the load is connected, frequency will be defines as 1/(m+1), where m=load moment of inertia/ rotor moment of inertia.
- When the motor speed exceeds the rated speed, regenerative brake frequency is in inverse proportion to the square of (running speed/rated speed).
- Power supply voltage is AC460 V (at 400 V of the main voltage).
  If the supply voltage fluctuates, frequency is in inverse proportion to the square of (Running supply voltage/460) relative to the value in the table.
- When regeneration occurs continuously such cases as running speed frequently changes or vertical feeding, consult us or a dealer.

Note) 2. If the effective torque is within the rated torque, there is no limit in generative brake.

Note) 3. Consult us or a dealer if the load moment of inertia exceeds the specified value.

Note) 4. Releasing time values represent the ones with DC-cutoff using a varistor.

Note) 5. The 17-bit absolute encoder can also be used as a 17-bit incremental encoder.

## Permissible Load at Output Shaft

The radial load is defined as a load applied to the output shaft in the right-angle direction. This load is generated when the gear head is coupled to the machine using a chain, belt, etc., but not when the gear head is directly connected to the coupling. As shown in the right figure, the permissible value is determined based on the load applied to the L/2 position of the output shaft. The thrust load is defined as a load applied to the output shaft in the axial direction.

**Because the radial load and thrust load significantly affect the life of the bearing, take care not to allow the load during operation to exceed the permissible radial load and thrust load shown in the table below.**

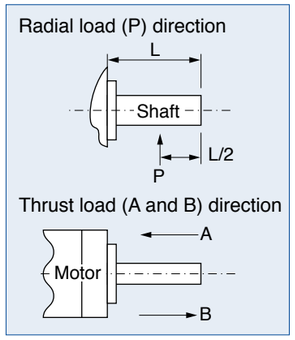


## Built-in Holding Brake

In the applications where the motor drives the vertical axis, this brake would be used to hold and prevent the work (moving load) from falling by gravity while the power to the servo is shut off.

**Use this built-in brake for "Holding" purpose only, that is to hold the stalling status. Never use this for "Brake" purpose to stop the load in motion.**

**• Output Timing of BRK-OFF Signal**

- For the brake release timing at power-on, or braking timing at Servo-OFF/Servo-Alarm while the motor is in motion, refer to the Operating Instructions (Overall).
- With the parameter, Pr4.38 (Setup of mechanical brake action while the motor is in motion), you can set up a time between when the motor enters to a free-run from energized status and when BRK-OFF signal turns off (brake will be engaged), when the Servo-OFF or alarm occurs while the motor is in motion. For details, download a copy of the instruction manual from our website.

**<Note>**

1. The lining sound of the brake (chattering and etc.) might be generated while running the motor with built-in brake, however this does not affect any functionality.
2. Magnetic flux might be generated through the motor shaft while the brake coil is energized (brake is open). Pay an extra attention when magnetic sensors are used nearby the motor.



**• Specifications of Built-in Holding Brake**

| Motor series | Motor output | Static friction torque N·m | Rotor inertia $\times 10^{-4}$ kg·m$^2$ | Engaging time ms | Releasing time ms | Exciting current DC A (at cool-off) | Releasing voltage DC V / Exciting voltage DC V | Permissible work (J) per one braking | Permissible total work $\times 10^3$ J | Permissible angular acceleration rad/s$^2$ |
|---|---|---|---|---|---|---|---|---|---|---|
| MSMD | 50 W, 100 W | 0.29 or more | 0.002 | 35 or less | 20 or less | 0.3 | 1 V or more / 24 ±1.2 | 39.2 | 4.9 | 30000 |
| | 200 W, 400 W | 1.27 or more | 0.018 | 50 or less | 15 or less | 0.36 | | 137 | 44.1 | |
| | 750 W | 2.45 or more | 0.075 | 70 or less | 20 or less | 0.42 | | 196 | 147 | |
| MSME | 50 W, 100 W | 0.29 or more | 0.002 | 35 or less | 20 or less | 0.3 | 1 V or more / 24 ±1.2 | 39.2 | 4.9 | 30000 |
| | 200 W, 400 W | 1.27 or more | 0.018 | 50 or less | 15 or less | 0.36 | | 137 | 44.1 | |
| | 750 W(200 V) | 2.45 or more | 0.075 | 70 or less | 20 or less | 0.42 | | 196 | 147 | |
| | 750 W(400 V) | 2.5 or more | 0.33 | 50 or less | 15 or less (100) | 0.7 | 2 V or more / 24 ±2.4 | 392 | 490 | 10000 |
| | 1.0 kW, 1.5 kW, 2.0 kW | 7.8 or more | | | | 0.81 | | | | |
| | 3.0 kW | 11.8 or more | | 80 or less | | | | | | |
| | 4.0 kW, 5.0 kW | 16.2 or more | 1.35 | 110 or less | 50 or less (130) | 0.9 | | 1470 | 2200 | |
| MDME | 400 W(400 V), 600 W(400 V) | 2.5 or more | 1.35 | 50 or less | 15 or less | 0.7 | 2 V or more / 24 ±2.4 | 392 | 490 | 10000 |
| | 1.0 kW | 4.9 or more | | 80 or less | 70 or less (200) | 0.59 | | 588 | 780 | |
| | 1.5 kW, 2.0 kW | 13.7 or more | | 100 or less | 50 or less (130) | 0.79 | | 1176 | 1500 | |
| | 3.0 kW | 16.2 or more | | 110 or less | | 0.9 | | 1470 | 2200 | |
| | 4.0 kW, 5.0 kW | 24.5 or more | 4.7 | 80 or less | 25 or less (200) | 1.3 | | 1372 | 2900 | 5440 |
| | 7.5 kW | 58.8 or more | | 150 or less | 50 or less | 1.4 | | | | 5000 |
| | 11.0 kW, 15.0 kW | 100 or more | 7.1 | 300 or less | 140 or less | 1.08 | | 2000 | 4000 | 3000 |
| MFME | 1.5 kW | 7.8 or more | 4.7 | 80 or less | 35 or less | 0.83 | 2 V or more / 24 ±2.4 | 1372 | 2900 | 10000 |
| | 2.5 kW | 21.6 or more | 8.75 | 150 or less | 100 or less | 0.75 | | 1470 | 1500 | |
| | 4.5 kW | 31.4 or more | | | | | | | 2200 | |
| MGME | 0.9 kW | 13.7 or more | 1.35 | 100 or less | 50 or less (130) | 0.79 | 2 V or more / 24 ±2.4 | 1176 | 1500 | 10000 |
| | 2.0 kW | 24.5 or more | 4.7 | 80 or less | 25 or less (200) | 1.3 | | 1372 | 2900 | 5440 |
| | 3.0 kW | 58.8 or more | | 150 or less | 50 or less (130) | 1.4 | | | | |
| | 4.5 kW, 6.0 kW | | | | 50 or less | | | | | 5000 |
| MHMD MSMJ MHMJ | 200 W, 400 W | 1.27 or more | 0.018 | 50 or less | 15 or less | 0.36 | 1 V or more / 24 ±1.2 | 137 | 44.1 | 30000 |
| | 750 W | 2.45 or more | 0.075 | 70 or less | 20 or less | 0.42 | | 196 | 147 | |
| MHME | 1.0 kW | 4.9 or more | 1.35 | 80 or less | 70 or less (200) | 0.59 | 2 V or more / 24 ±2.4 | 588 | 780 | 10000 |
| | 1.5 kW | 13.7 or more | | 100 or less | 50 or less (130) | 0.79 | | 1176 | 1500 | |
| | 2.0 kW～5.0 kW | 24.5 or more | 4.7 | 80 or less | 25 or less (200) | 1.3 | | 1372 | 2900 | 5440 |
| | 7.5 kW | 58.8 or more | | 150 or less | 50 or less | 1.4 | | | | 5000 |

- Releasing time values represent the ones with DC-cutoff using a varistor.
  Values in ( ) represent those measured by using a diode (V03C by Hitachi, Ltd.)
- Above values (except static friction torque, releasing voltage and excitation current) represent typical values.
- Backlash of the built-in holding brake is kept ±1˚or smaller at ex-factory point.
- Service life of the number of acceleration/deceleration with the above permissible angular acceleration is more than 10 million times. (Life end is defined as when the brake backlash drastically changes.)

# Cable part No. Designation

## Encoder Cable

| 1 | 2 | 3 | 4 | 5 | 6 | 7 | 8 | 9 | 10 | 11 | 12 |
|---|---|---|---|---|---|---|---|---|---|---|---|
| M | F | E | C | A | 0 | 0 | 5 | 0 | M | J | D |

Type classification

| | |
|---|---|
| MFECA: Encoder cable | |

Cable length

| | |
|---|---|
| 0030 | 3 m |
| 0050 | 5 m |
| 0100 | 10 m |
| 0200 | 20 m |

Cable type

| | |
|---|---|
| E | PVC cable with shield by Oki Electric Cable Co., 0.20 mm² × 4P(8-wire), 3P(6-wire) |
| M | Hitachi Cable, Ltd. Highly bendable type |
| T | Hitachi Cable, Ltd. Standard bendable type |

Cable end (Encoder side)

| | |
|---|---|
| A | Tyco Electronics connector |
| J | Japan Aviation Electronics Industry, Ltd. connector (Direction of motor shaft) |
| K | Japan Aviation Electronics Industry, Ltd. connector (Opposite direction of motor shaft) |
| S | "S" shaped cannonplug |
| T | Japan Aviation Electronics Industry, Ltd. plug connector |

Cable end (Driver side)

| | |
|---|---|
| D | Connector (Incremental) |
| E | Connector (Absolute) |
| M | Connector (MSMD, MHMD) |

## Motor Cable, Brake Cable

| 1 | 2 | 3 | 4 | 5 | 6 | 7 | 8 | 9 | 10 | 11 | 12 |
|---|---|---|---|---|---|---|---|---|---|---|---|
| M | F | M | C | A | 0 | 0 | 5 | 2 | N | J | D |

AC servo motor cable

Type classification

| | |
|---|---|
| A | Standard |
| B | Special |
| ⋮ | Design order |

Cable length

| | |
|---|---|
| 003 | 3 m |
| 005 | 5 m |
| 010 | 10 m |
| 020 | 20 m |

Sectional area of cable core

| | |
|---|---|
| 0 | 0.75 mm² |
| 1 | 1.25 mm² |
| 2 | 2.0 mm² |
| 3 | 3.5 mm² |

Cable end at driver side

| | |
|---|---|
| D | Rod terminal |
| T | Clamp terminal |

Cable end at motor side

| | |
|---|---|
| C | S type cannon plug |
| E | Tyco Electronics connector |
| J | Japan Aviation Electronics Industry, Ltd. connector (Direction of motor shaft) |
| K | Japan Aviation Electronics Industry, Ltd. connector (Opposite direction of motor shaft) |

Cable type

| | |
|---|---|
| E | ROBO-TOP® 4-wire by DYDEN CORPORATION |
| F | ROBO-TOP® 6-wire by DYDEN CORPORATION |
| G | ROBO-TOP® 2-wire by DYDEN CORPORATION |
| N | 4-wire by Hitachi Cable, Ltd. (Highly bendable type) |
| R | 4-wire by Hitachi Cable, Ltd. (Standard bendable type) |
| P | 2-wire by Hitachi Cable, Ltd. (Highly bendable type) |
| S | 2-wire by Hitachi Cable, Ltd. (Standard bendable type) |

ROBO-TOP® is a trade mark of DYDEN CORPORATION





# Specifications of Motor connector

- **When the motors of <MSMD, MHMD, MSMJ, MHMJ> are used, they are connected as shown below.**

Connector: Made by Tyco Electronics (The figures below show connectors for the motor.)

**Connector for encoder**

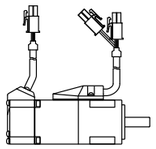

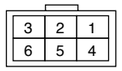


172168-1
20-bit Incremental

| PIN No. | Application |
|---|---|
| 1 | NC |
| 2 | PS |
| 3 | $\overline{PS}$ |
| 4 | E5V |
| 5 | E0V |
| 6 | FG(SHIELD) |

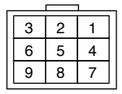


172169-1
17-bit Absolute

| PIN No. | Application |
|---|---|
| 1 | BAT+ |
| 2 | BAT– |
| 3 | FG(SHIELD) |
| 4 | PS |
| 5 | $\overline{PS}$ |
| 6 | NC |
| 7 | E5V |
| 8 | E0V |
| 9 | NC |

**<Remarks>** Do not connect anything to NC.

**Connector for brake**

**Connector for motor**

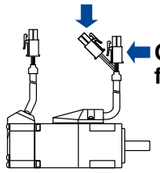

<Connector for motor>

172167-1

| PIN No. | Application |
|---|---|
| 1 | U-phase |
| 2 | V-phase |
| 3 | W-phase |
| 4 | Ground |

<Connector for brake>

172165-1

| PIN No. | Application |
|---|---|
| 1 | Brake |
| 2 | Brake |

* Electromagnetic brake is a nonpolar device.

- **When the motors of <MSME (50 W to 750 W (200 V))> are used, they are connected as shown below.**

Connector: Made by Japan Aviation Electronics Industry, Ltd. (The figures below show connectors for the motor.)

* Do not remove the gasket supplied with the junction cable connector. Securely install the gasket in place. Otherwise, the degree of protection of IP67 will not be guaranteed.

**Connector for encoder**

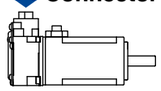

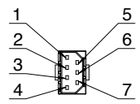


JN6CR07PM2

20-bit Incremental

| PIN No. | Application |
|---|---|
| 1 | FG(SHIELD) |
| 2 | — |
| 3 | E0V |
| 4 | PS |
| 5 | — |
| 6 | E5V |
| 7 | PS |

17-bit Absolute

| PIN No. | Application |
|---|---|
| 1 | FG(SHIELD) |
| 2 | BAT– |
| 3 | E0V |
| 4 | $\overline{PS}$ |
| 5 | BAT+ |
| 6 | E5V |
| 7 | PS |

Tightening torque of the screw (M2) 0.19 N·m to 0.21 N·m

* Be sure to use only the screw supplied with the connector, to avoid damage.

**Connector for motor**

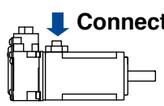

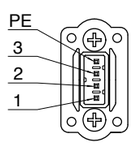


JN8AT04NJ1

| PIN No. | Application |
|---|---|
| 1 | U-phase |
| 2 | V-phase |
| 3 | W-phase |
| PE | Ground |

Tightening torque of the screw (M2) 0.085 N·m to 0.095 N·m (screwed to plastic)

* Be sure to use only the screw supplied with the connector, to avoid damage.

[Motor with brake]

**Connector for brake**

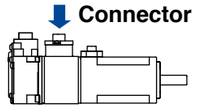

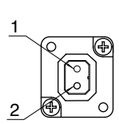


JN4AT02PJM-R

| PIN No. | Application |
|---|---|
| 1 | Brake |
| 2 | Brake |

* Electromagnetic brake is a nonpolar device.

Tightening torque of the screw (M2) 0.19 N·m to 0.21 N·m

* Be sure to use only the screw supplied with the connector, to avoid damage.

# Specifications of Motor connector

- **When the motors of <MSME (750 W(400 V), 1.0 kW to 5.0 kW), MDME, MGME, MHME> are used, they are connected as shown below.**
  Connector: Made by Japan Aviation Electronics Industry, Ltd. (The figures below show connectors for the motor.)

## • Connector for encoder

**IP65 motor**
**Connector for encoder**
**(Large type)**

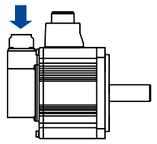

**IP67 motor**
**Connector for encoder**
**(Small type)**

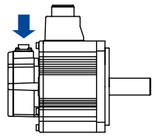

<Encoder connector for IP65 motor>

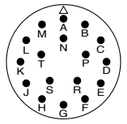


N/MS3102A20-29P

| 20-bit Incremental | | 17-bit Absolute | |
|---|---|---|---|
| PIN No. | Application | PIN No. | Application |
| A | NC | A | NC |
| B | NC | B | NC |
| C | NC | C | NC |
| D | NC | D | NC |
| E | NC | E | NC |
| F | NC | F | NC |
| G | E0V | G | E0V |
| H | E5V | H | E5V |
| J | FG(SHIELD) | J | FG(SHIELD) |
| K | PS | K | PS |
| L | $\overline{PS}$ | L | $\overline{PS}$ |
| M | NC | M | NC |
| N | NC | N | NC |
| P | NC | P | NC |
| R | NC | R | NC |
| S | NC | S | BAT− |
| T | NC | T | BAT+ |

<Encoder connector for IP67 motor>

JN2AS10ML3-R

| 20-bit Incremental | | 17-bit Absolute | |
|---|---|---|---|
| PIN No. | Application | PIN No. | Application |
| 1 | E0V | 1 | E0V |
| 2 | NC | 2 | NC |
| 3 | PS | 3 | PS |
| 4 | E5V | 4 | E5V |
| 5 | NC | 5 | BAT− |
| 6 | NC | 6 | BAT+ |
| 7 | $\overline{PS}$ | 7 | $\overline{PS}$ |
| 8 | NC | 8 | NC |
| 9 | FG(SHIELD) | 9 | FG(SHIELD) |
| 10 | NC | 10 | NC |

**<Remarks>**
Do not connect anything to NC.

## • Connector for motor/brake

**[0.9 kW to 5.0 kW]**

**Connector for motor/brake**

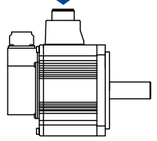

<without Brake>

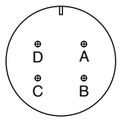


JL04V-2E20-4PE-B-R

MSME 750 W(400 V), 1.0 kW to 2.0 kW
MDME 400 W (400 V), 600 W (400 V), 1.0 kW to 2.0 kW
MGME 0.9 kW
MHME 1.0 kW to 1.5 kW

JL04HV-2E22-22PE-B-R

MSME 3.0 kW to 5.0 kW
MDME 3.0 kW to 5.0 kW
MGME 2.0 kW to 4.5 kW
MHME 2.0 kW to 5.0 kW

| PIN No. | Application |
|---|---|
| A | U-phase |
| B | V-phase |
| C | W-phase |
| D | Ground |

<with Brake>

* Electromagnetic brake is a nonpolar device.

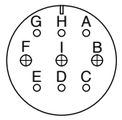


JL04V-2E20-18PE-B-R

**[200 V]**

MSME 1.0 kW to 2.0 kW
MDME 1.0 kW to 2.0 kW
MFME* 1.5 kW
MGME 0.9 kW
MHME 1.0 kW to 1.5 kW

| PIN No. | Application |
|---|---|
| G | Brake |
| H | Brake |
| A | NC |
| F | U-phase |
| I | V-phase |
| B | W-phase |
| E | Ground |
| D | Ground |
| C | NC |

JL04V-2E24-11PE-B-R

**[200 V]**

MSME 3.0 kW to 5.0 kW
MDME 3.0 kW to 5.0 kW
MFME* 2.5 kW, 4.5 kW
MGME 2.0 kW to 4.5 kW
MHME 2.0 kW to 5.0 kW

**[400 V]**

MSME 750 W, 1.0 kW to 5.0 kW
MDME 400 W, 600 W, 1.0 kW to 5.0 kW
MFME* 1.5 kW to 4.5 kW
MGME 0.9 kW to 4.5 kW
MHME 1.0 kW to 5.0 kW

| PIN No. | Application |
|---|---|
| A | Brake |
| B | Brake |
| C | NC |
| D | U-phase |
| E | V-phase |
| F | W-phase |
| G | Ground |
| H | Ground |
| I | NC |

* MFME is common to with or without brake.
<Remarks>
Do not connect anything to NC.

**[6.0 kW or more]**

**Connector for motor**
**Connector for brake**

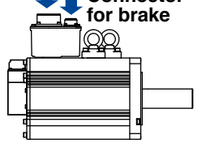

<Motor>

JL04V-2E32-17PE-B-R

MDME 7.5 kW to 15.0 kW
MGME 6.0 kW
MHME 7.5 kW

| PIN No. | Application |
|---|---|
| A | U-phase |
| B | V-phase |
| C | W-phase |
| D | Ground |

<Brake>

N/MS3102A 14S-2P

MDME 7.5 kW to 15.0 kW
MGME 6.0 kW
MHME 7.5 kW

| PIN No. | Application |
|---|---|
| A | Brake |
| B | Brake |
| C | NC |
| D | NC |

* Electromagnetic brake is a nonpolar device.





# Encoder Cable

* It doesn't correspond to IP65 and IP67.

| Part No. | MFECA0 * * 0EAM | Compatible motor output | MSMD 50 W to 750 W, MSMJ 200 W to 750 W, | MHMD 200 W to 750 W MHMJ 200 W to 750 W |
|---|---|---|---|---|
| Specifications | For 20-bit incremental encoder (Without battery box) | | | |

[Unit: mm]

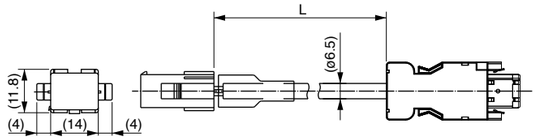


| Title | Part No. | Manufacturer |
|---|---|---|
| Connector (Driver side) | 3E206-0100 KV | Sumitomo 3M (or equivalent) |
| Shell kit | 3E306-3200-008 | |
| Connector (Motor side) | 172160-1 | Tyco Electronics |
| Connector pin | 170365-1 | |
| Cable | 0.20 mm²×3P (6-wire) | Oki Electric Cable Co., Ltd. |

| L (m) | Part No. |
|---|---|
| 3 | MFECA0030EAM |
| 5 | MFECA0050EAM |
| 10 | MFECA0100EAM |
| 20 | MFECA0200EAM |

| Part No. | MFECA0 * * 0EAE | Compatible motor output | MSMD 50 W to 750 W, MSMJ 200 W to 750 W, | MHMD 200 W to 750 W MHMJ 200 W to 750 W |
|---|---|---|---|---|
| Specifications | For 17-bit absolute encoder (With battery box) * | | | |

* Battery is not included. Please buy the absolute encoder battery "DV0P2990" separately.

[Unit: mm]

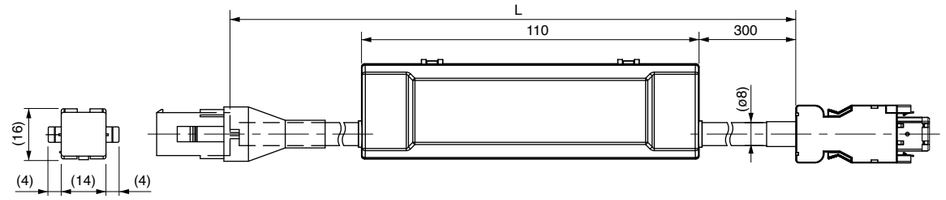


| Title | Part No. | Manufacturer |
|---|---|---|
| Connector (Driver side) | 3E206-0100 KV | Sumitomo 3M (or equivalent) |
| Shell kit | 3E306-3200-008 | |
| Connector (Motor side) | 172161-1 | Tyco Electronics |
| Connector pin | 170365-1 | |
| Cable | 0.20 mm²×4P (8-wire) | Oki Electric Cable Co., Ltd. |

| L (m) | Part No. |
|---|---|
| 3 | MFECA0030EAE |
| 5 | MFECA0050EAE |
| 10 | MFECA0100EAE |
| 20 | MFECA0200EAE |

| Part No. | MFECA0 * * 0EAD | Compatible motor output | MSMD 50 W to 750 W, MSMJ 200 W to 750 W, | MHMD 200 W to 750 W MHMJ 200 W to 750 W |
|---|---|---|---|---|
| Specifications | For 17-bit incremental encoder (Without battery box) | | | |

[Unit: mm]

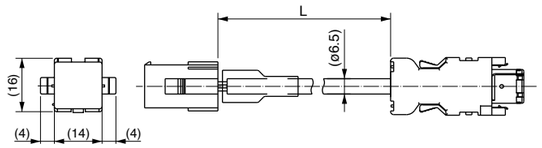


| Title | Part No. | Manufacturer |
|---|---|---|
| Connector (Driver side) | 3E206-0100 KV | Sumitomo 3M (or equivalent) |
| Shell kit | 3E306-3200-008 | |
| Connector (Motor side) | 172161-1 | Tyco Electronics |
| Connector pin | 170365-1 | |
| Cable | 0.20 mm²×3P (6-wire) | Oki Electric Cable Co., Ltd. |

| L (m) | Part No. |
|---|---|
| 3 | MFECA0030EAD |
| 5 | MFECA0050EAD |
| 10 | MFECA0100EAD |
| 20 | MFECA0200EAD |

# Encoder Cable

* It doesn't correspond to IP65 and IP67.

| | | | |
|---|---|---|---|
| Part No. | **MFECA0 * * 0MJD** (Highly bendable type, Direction of motor shaft) | Compatible motor output | MSME 50 W to 750 W (200 V) |
| | **MFECA0 * * 0MKD** (Highly bendable type, Opposite direction of motor shaft) | | |
| | **MFECA0 * * 0TJD** (Standard bendable type, Direction of motor shaft) | | |
| | **MFECA0 * * 0TKD** (Standard bendable type, Opposite direction of motor shaft) | | |
| Specifications | For 20-bit incremental encoder (Without battery box) * 17bit-use is possible | | |

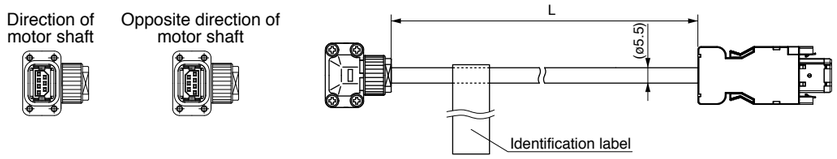


[Unit: mm]

| Title | Part No. | Manufacturer |
|---|---|---|
| Connector (Driver side) | 3E206-0100 KV | Sumitomo 3M (or equivalent) |
| Shell kit | 3E306-3200-008 | |
| Connector (Motor side) | JN6FR07SM1 | Japan Aviation Electronics Ind. |
| Connector pin | LY10-C1-A1-10000 | |
| Cable | AWG24 4-wire, AWG22 2-wire (ø5.5) | Hitachi Cable, Ltd. |

| L (m) | Part No.(ex.) |
|---|---|
| 3 | MFECA0030MJD |
| 5 | MFECA0050MJD |
| 10 | MFECA0100MJD |
| 20 | MFECA0200MJD |

| | | | |
|---|---|---|---|
| Part No. | **MFECA0 * * 0MJE** (Highly bendable type, Direction of motor shaft) | Compatible motor output | MSME 50 W to 750 W (200 V) |
| | **MFECA0 * * 0MKE** (Highly bendable type, Opposite direction of motor shaft) | | |
| | **MFECA0 * * 0TJE** (Standard bendable type, Direction of motor shaft) | | |
| | **MFECA0 * * 0TKE** (Standard bendable type, Opposite direction of motor shaft) | | |
| Specifications | For 17-bit absolute encoder (With battery box) * | | |

* Battery is not included. Please buy the absolute encoder battery "DV0P2990" separately.

[Unit: mm]

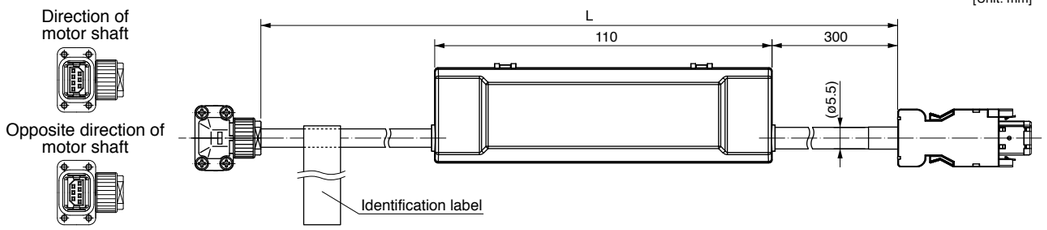


| Title | Part No. | Manufacturer |
|---|---|---|
| Connector (Driver side) | 3E206-0100 KV | Sumitomo 3M (or equivalent) |
| Shell kit | 3E306-3200-008 | |
| Connector (Motor side) | JN6FR07SM1 | Japan Aviation Electronics Ind. |
| Connector pin | LY10-C1-A1-10000 | |
| Cable | AWG24 4-wire, AWG22 2-wire (ø5.5) | Hitachi Cable, Ltd. |

| L (m) | Part No.(ex.) |
|---|---|
| 3 | MFECA0030MJE |
| 5 | MFECA0050MJE |
| 10 | MFECA0100MJE |
| 20 | MFECA0200MJE |

| | | | |
|---|---|---|---|
| Part No. | **MFECA0 * * 0ESD** | Compatible motor output | MDME 400 W(400 V), MDME 600 W(400 V)<br>MSME 750 W(400 V)<br>0.9 kW to 15.0 kW (IP65 Motor) |
| Specifications | For 20-bit incremental encoder (Without battery box) | | |

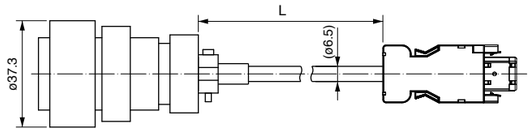


[Unit: mm]

| Title | Part No. | Manufacturer |
|---|---|---|
| Connector (Driver side) | 3E206-0100 KV | Sumitomo 3M (or equivalent) |
| Shell kit | 3E306-3200-008 | |
| Connector (Motor side) | N/MS3106B20-29S | Japan Aviation Electronics Ind. |
| Cable clamp | N/MS3057-12A | |
| Cable | 0.2 mm² ×3P (6-wire) | Oki Electric Cable Co., Ltd. |

| L (m) | Part No. |
|---|---|
| 3 | MFECA0030ESD |
| 5 | MFECA0050ESD |
| 10 | MFECA0100ESD |
| 20 | MFECA0200ESD |



| | | | |
|---|---|---|---|
| Part No. | **MFECA0 * * 0ETD** | Compatible motor output | MDME 400 W(400 V), MDME 600 W(400 V),<br>MSME 750 W(400 V)<br>0.9 kW to 15.0 kW (IP67 Motor) |
| Specifications | For 20-bit incremental encoder (Without battery box) | | |

[Unit: mm]

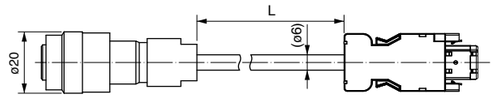


| Title | Part No. | Manufacturer |
|---|---|---|
| Connector (Driver side) | 3E206-0100 KV | Sumitomo 3M (or equivalent) |
| Shell kit | 3E306-3200-008 | |
| Connector (Motor side) | JN2DS10SL1-R | Japan Aviation Electronics Ind. |
| Connector pin | JN1-22-22S-PKG100 | |
| Cable | 0.2 mm²×3P (6-wire) | Oki Electric Cable Co., Ltd. |

| L (m) | Part No. |
|---|---|
| 3 | MFECA0030ETD |
| 5 | MFECA0050ETD |
| 10 | MFECA0100ETD |
| 20 | MFECA0200ETD |

| | | | |
|---|---|---|---|
| Part No. | **MFECA0 * * 0ESE** | Compatible motor output | 0.9 kW to 5.0 kW (IP65 Motor) |
| Specifications | For 17-bit absolute encoder (With battery box) * | | |

* Battery is not included. Please buy the absolute encoder battery "DV0P2990" separately.

[Unit: mm]

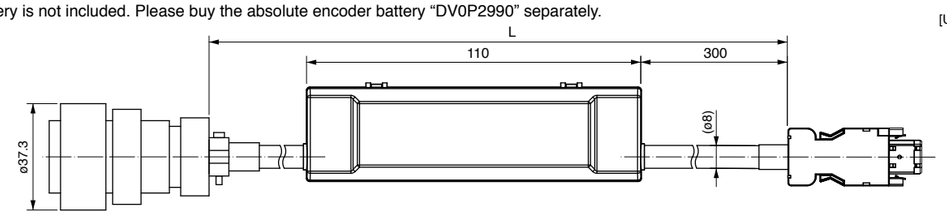


| Title | Part No. | Manufacturer |
|---|---|---|
| Connector (Driver side) | 3E206-0100 KV | Sumitomo 3M (or equivalent) |
| Shell kit | 3E306-3200-008 | |
| Connector (Motor side) | N/MS3106B20-29S | Japan Aviation Electronics Ind. |
| Cable clamp | N/MS3057-12A | |
| Cable | 0.2 mm² ×4P (8-wire) | Oki Electric Cable Co., Ltd. |

| L (m) | Part No. |
|---|---|
| 3 | MFECA0030ESE |
| 5 | MFECA0050ESE |
| 10 | MFECA0100ESE |
| 20 | MFECA0200ESE |

| | | | |
|---|---|---|---|
| Part No. | **MFECA0 * * 0ETE** | Compatible motor output | MDME 400 W(400 V), MDME 600 W(400 V)<br>MSME 750 W(400 V)<br>0.9 kW to 15.0 kW (IP67 Motor) |
| Specifications | For 17-bit absolute encoder (With battery box) * | | |

* Battery is not included. Please buy the absolute encoder battery "DV0P2990" separately.

[Unit: mm]

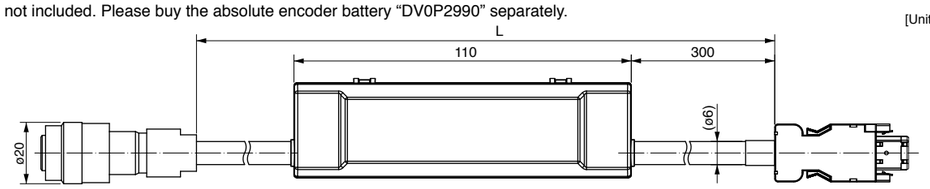


| Title | Part No. | Manufacturer |
|---|---|---|
| Connector (Driver side) | 3E206-0100 KV | Sumitomo 3M (or equivalent) |
| Shell kit | 3E306-3200-008 | |
| Connector (Motor side) | JN2DS10SL1-R | Japan Aviation Electronics Ind. |
| Connector pin | JN1-22-22S-PKG100 | |
| Cable | 0.2 mm² ×3P (6-wire) | Oki Electric Cable Co., Ltd. |

| L (m) | Part No. |
|---|---|
| 3 | MFECA0030ETE |
| 5 | MFECA0050ETE |
| 10 | MFECA0100ETE |
| 20 | MFECA0200ETE |

# Motor Cable (without Brake)

* It doesn't correspond to IP65 and IP67.

| Part No. | MFMCA0 * * 0EED | Applicable model | MSMD 50 W to 750 W, MHMD 200 W to 750 W<br>MSMJ 200 W to 750 W, MHMJ 200 W to 750 W |
|---|---|---|---|

[Unit: mm]

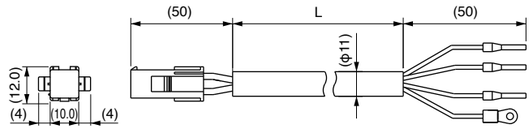


| Title | Part No. | Manufacturer |
|---|---|---|
| Connector | 172159-1 | Tyco Electronics |
| Connector pin | 170366-1 | |
| Rod terminal | AI0.75-8GY | Phoenix Contact |
| Nylon insulated round terminal | N1.25-M4 | J.S.T Mfg. Co., Ltd. |
| Cable | ROBO-TOP 600V 0.75mm² 4-wire | DYDEN CORPORATION |

| L (m) | Part No. |
|---|---|
| 3 | MFMCA0030EED |
| 5 | MFMCA0050EED |
| 10 | MFMCA0100EED |
| 20 | MFMCA0200EED |

| Part No. | | Applicable model | |
|---|---|---|---|
| | MFMCA0 * * 0NJD (Highly bendable type, Direction of motor shaft) | | MSME 50 W to 750 W(200V) |
| | MFMCA0 * * 0NKD (Highly bendable type, Opposite direction of motor shaft) | | MSME 200 W to 750 W(200V) |
| | MFMCA0 * * 0RJD (Standard bendable type, Direction of motor shaft) | | MSME 50 W to 750 W(200V) |
| | MFMCA0 * * 0RKD (Standard bendable type, Opposite direction of motor shaft) | | MSME 200 W to 750 W(200V) |

[Unit: mm]

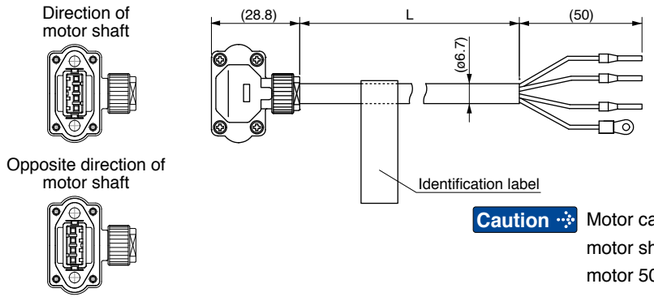


**Caution** Motor cable for opposite direction of motor shaft cannot be used with a motor 50W and 100W.

| Title | Part No. | Manufacturer |
|---|---|---|
| Connector | JN8FT04SJ1 | Japan Aviation Electronics Ind. |
| Connector pin | ST-TMH-S-C1B-3500 | |
| Rod terminal | AI0.75-8GY | Phoenix Contact |
| Nylon insulated round terminal | N1.25-M4 | J.S.T Mfg. Co., Ltd. |
| Cable | AWG18 4-wire (ø6.7) | Hitachi Cable, Ltd. |

| L (m) | Part No.(ex.) |
|---|---|
| 3 | MFMCA0030NJD |
| 5 | MFMCA0050NJD |
| 10 | MFMCA0100NJD |
| 20 | MFMCA0200NJD |

| Part No. | MFMCA0 * * 2ECD | Applicable model | MFME 1.5 kW(200 V) |
|---|---|---|---|

[Unit: mm]

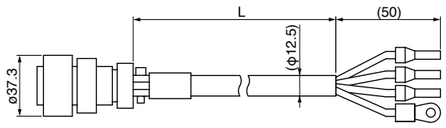


| Title | Part No. | Manufacturer |
|---|---|---|
| Connector | JL04V-6A20-18SE-EB-R | Japan Aviation Electronics Ind. |
| Cable clamp | JL04-2022CK(14)-R | |
| Rod terminal | NTUB-2 | J.S.T Mfg. Co., Ltd. |
| Nylon insulated round terminal | N2-M4 | |
| Cable | ROBO-TOP 600V 2.0mm² 4-wire | DYDEN CORPORATION |

| L (m) | Part No. |
|---|---|
| 3 | MFMCA0032ECD |
| 5 | MFMCA0052ECD |
| 10 | MFMCA0102ECD |
| 20 | MFMCA0202ECD |



| Part No. | MFMCD0 * * 2ECD | Applicable model | MSME 750 W(400 V), 1.0 kW to 2.0 kW,<br>MDME 400 W(400 V), 600 W(400 V), 1.0 kW to 2.0 kW<br>MHME 1.0 kW to 1.5 kW, MGME 0.9 kW<br>(All model 200 V and 400 V commonness) |
|---|---|---|---|

[Unit: mm]

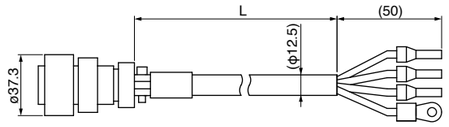


| Title | Part No. | Manufacturer |
|---|---|---|
| Connector | JL04V-6A20-4SE-EB-R | Japan Aviation Electronics Ind. |
| Cable clamp | JL04-2022CK(14)-R | |
| Rod terminal | NTUB-2 | J.S.T Mfg. Co., Ltd. |
| Nylon insulated round terminal | N2-M4 | |
| Cable | ROBO-TOP 600 V 2.0 mm² 4-wire | DYDEN CORPORATION |

| L (m) | Part No. |
|---|---|
| 3 | MFMCD0032ECD |
| 5 | MFMCD0052ECD |
| 10 | MFMCD0102ECD |
| 20 | MFMCD0202ECD |

| Part No. | MFMCE0 * * 2ECD | Applicable model | MHME 2.0 kW<br>(200 V and 400 V commonness) |
|---|---|---|---|

[Unit: mm]

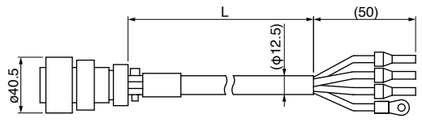


| Title | Part No. | Manufacturer |
|---|---|---|
| Connector | JL04V-6A22-22SE-EB-R | Japan Aviation Electronics Ind. |
| Cable clamp | JL04-2022CK(14)-R | |
| Rod terminal | NTUB-2 | J.S.T Mfg. Co., Ltd. |
| Nylon insulated round terminal | N2-M4 | |
| Cable | ROBO-TOP 600 V 2.0 mm² 4-wire | DYDEN CORPORATION |

| L (m) | Part No. |
|---|---|
| 3 | MFMCE0032ECD |
| 5 | MFMCE0052ECD |
| 10 | MFMCE0102ECD |
| 20 | MFMCE0202ECD |

| Part No. | MFMCF0 * * 2ECD | Applicable model | MFME 1.5 kW(400 V), 2.5 kW(200 V and 400 V commonness) |
|---|---|---|---|

[Unit: mm]

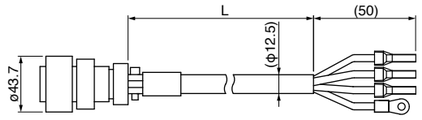


| Title | Part No. | Manufacturer |
|---|---|---|
| Connector | JL04V-6A24-11SE-EB-R | Japan Aviation Electronics Ind. |
| Cable clamp | JL04-2428CK(17)-R | |
| Rod terminal | NTUB-2 | J.S.T Mfg. Co., Ltd. |
| Nylon insulated round terminal | N2-M4 | |
| Cable | ROBO-TOP 600 V 2.0 mm² 4-wire | DYDEN CORPORATION |

| L (m) | Part No. |
|---|---|
| 3 | MFMCF0032ECD |
| 5 | MFMCF0052ECD |
| 10 | MFMCF0102ECD |
| 20 | MFMCF0202ECD |

# Motor Cable (without Brake)

* It doesn't correspond to IP65 and IP67.

| Part No. | MFMCA0 * * 3ECT | Applicable model | MSME 3.0 kW to 5.0 kW, MDME 3.0kW to 5.0 kW<br>MHME 3.0 kW to 5.0 kW, MGME 2.0kW to 4.5 kW<br>(All model 200 V and 400 V commonness) |
|---|---|---|---|

[Unit: mm]

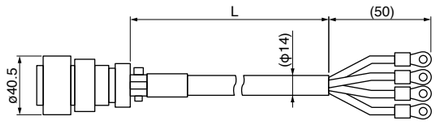


| Title | Part No. | Manufacturer |
|---|---|---|
| Connector | JL04V-6A22-22SE-EB-R | Japan Aviation Electronics Ind. |
| Cable clamp | JL04-2022CK(14)-R | |
| Nylon insulated round terminal | N5.5-5 | J.S.T Mfg. Co., Ltd. |
| Cable | ROBO-TOP 600 V 3.5 mm$^2$ 4-wire | DYDEN CORPORATION |

| L (m) | Part No. |
|---|---|
| 3 | MFMCA0033ECT |
| 5 | MFMCA0053ECT |
| 10 | MFMCA0103ECT |
| 20 | MFMCA0203ECT |

| Part No. | MFMCD0 * * 3ECT | Applicable model | MFME 4.5 kW<br>(200 V and 400 V commonness) |
|---|---|---|---|

[Unit: mm]

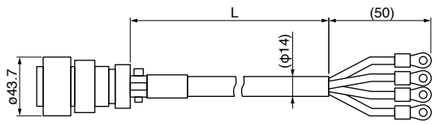


| Title | Part No. | Manufacturer |
|---|---|---|
| Connector | JL04V-6A24-11SE-EB-R | Japan Aviation Electronics Ind. |
| Cable clamp | JL04-2428CK(17)-R | |
| Nylon insulated round terminal | N5.5-5 | J.S.T Mfg. Co., Ltd. |
| Cable | ROBO-TOP 600 V 3.5 mm$^2$ 4-wire | DYDEN CORPORATION |

| L (m) | Part No. |
|---|---|
| 3 | MFMCD0033ECT |
| 5 | MFMCD0053ECT |
| 10 | MFMCD0103ECT |
| 20 | MFMCD0203ECT |





# Motor Cable (with Brake)

* It doesn't correspond to IP65 and IP67.

| Part No. | MFMCA0 * * 2FCD | Applicable model | MSME 1.0 kW to 2.0 kW(200 V),<br>MDME 1.0 kW to 2.0 kW(200 V),<br>MFME 1.5 kW(200 V),<br>MHME 1.0 kW(200 V) to 1.5 kW(200 V)<br>MGME 0.9 kW(200V ) |
|---|---|---|---|

[Unit: mm]

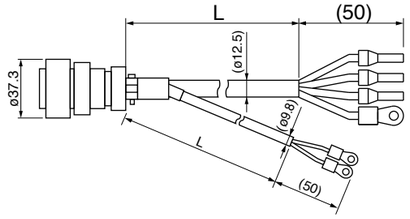


| Title | | Part No. | Manufacturer |
|---|---|---|---|
| Connector | | JL04V-6A20-18SE-EB-R | Japan Aviation Electronics Ind. |
| Cable clamp | | JL04-2022CK(14)-R | |
| Rod terminal | | NTUB-2 | J.S.T Mfg. Co., Ltd. |
| Nylon insulated round terminal | Earth | N2-M4 | J.S.T Mfg. Co., Ltd. |
| | Brake | N1.25-M4 | |
| Cable | | ROBO-TOP 600 V 0.75 mm$^2$ and ROBO-TOP 600 V 2.0 mm$^2$ 6-wire | DYDEN CORPORATION |

| L (m) | Part No. |
|---|---|
| 3 | MFMCA0032FCD |
| 5 | MFMCA0052FCD |
| 10 | MFMCA0102FCD |
| 20 | MFMCA0202FCD |

| Part No. | MFMCE0 * * 2FCD | Applicable model | MSME 750 W(400 V) to 2.0 kW(400 V),<br>MDME 400 W(400 V) to 2.0 kW(400 V),<br>MFME 1.5 kW(400 V), 2.5 kW(200 V/400 V),<br>MGME 0.9 kW(400 V)<br>MHME 1.0 kW(400 V), 1.5 kW(400 V), 2.0 kW(200 V/400 V) |
|---|---|---|---|

[Unit: mm]

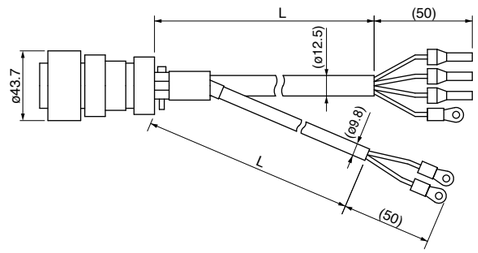


| Title | | Part No. | Manufacturer |
|---|---|---|---|
| Connector | | JL04V-6A24-11SE-EB-R | Japan Aviation Electronics Ind. |
| Cable clamp | | JL04-2428CK(17)-R | |
| Rod terminal | | NTUB-2 | J.S.T Mfg. Co., Ltd. |
| Nylon insulated round terminal | Earth | N2-M4 | J.S.T Mfg. Co., Ltd. |
| | Brake | N1.25-M4 | |
| Cable | | ROBO-TOP 600 V 0.75 mm$^2$ and ROBO-TOP 600 V 2.0 mm$^2$ 6-wire | DYDEN CORPORATION |

| L (m) | Part No. |
|---|---|
| 3 | MFMCE0032FCD |
| 5 | MFMCE0052FCD |
| 10 | MFMCE0102FCD |
| 20 | MFMCE0202FCD |

# Motor Cable (with Brake)

* It doesn't correspond to IP65 and IP67.

| Part No. | MFMCA0 * * 3FCT | Applicable model | MSME 3.0 kW to 5.0 kW, MDME 3.0 kW to 5.0 kW<br>MFME 4.5 kW, MHME 3.0 kW to 5.0 kW<br>MGME 2.0 kW to 4.5 kW<br>(All model 200 V and 400 V commonness) |
|---|---|---|---|

[Unit: mm]

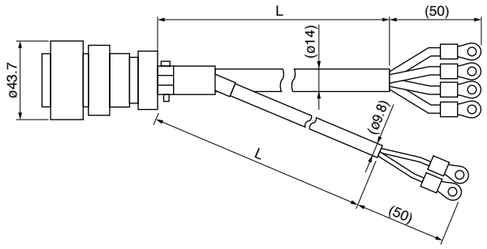


| Title | | Part No. | Manufacturer |
|---|---|---|---|
| Connector | | JL04V-6A24-11SE-EB-R | Japan Aviation Electronics Ind. |
| Cable clamp | | JL04-2428CK(17)-R | |
| Nylon insulated round terminal | Earth | N5.5-5 | J.S.T Mfg. Co., Ltd. |
| | Brake | N1.25-M4 | |
| Cable | | ROBO-TOP 600 V 0.75 mm² and<br>ROBO-TOP 600 V 3.5 mm² 6-wire | DYDEN CORPORATION |

| L (m) | Part No. |
|---|---|
| 3 | MFMCA0033FCT |
| 5 | MFMCA0053FCT |
| 10 | MFMCA0103FCT |
| 20 | MFMCA0203FCT |





# Brake Cable

* It doesn't correspond to IP65 and IP67.

| Part No. | MFMCB0 * * 0GET | Applicable model | MSMD 50 W to 750 W, MHMD 200 W to 750 W<br>MSMJ 200 W to 750 W, MHMJ 200 W to 750 W |
|---|---|---|---|

[Unit: mm]

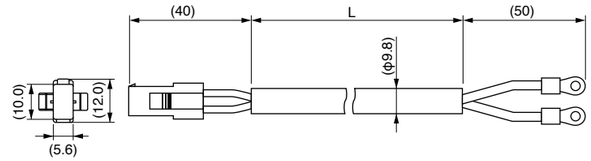


| Title | Part No. | Manufacturer |
|---|---|---|
| Connector | 172157-1 | Tyco Electronics |
| Connector pin | 170366-1, 170362-1 | |
| Nylon insulated round terminal | N1.25-M4 | J.S.T Mfg. Co., Ltd. |
| Cable | ROBO-TOP 600 V 0.75 mm² 2-wire | DYDEN CORPORATION |

| L (m) | Part No. |
|---|---|
| 3 | MFMCB0030GET |
| 5 | MFMCB0050GET |
| 10 | MFMCB0100GET |
| 20 | MFMCB0200GET |

| Part No. | | Applicable model |
|---|---|---|
| | MFMCB0 * * 0PJT (Highly bendable type, Direction of motor shaft) | MSME<br>50 W to 750 W<br>(200 V) |
| | MFMCB0 * * 0PKT (Highly bendable type, Opposite direction of motor shaft) | |
| | MFMCB0 * * 0SJT (Standard bendable type, Direction of motor shaft) | |
| | MFMCB0 * * 0SKT (Standard bendable type, Opposite direction of motor shaft) | |

[Unit: mm]

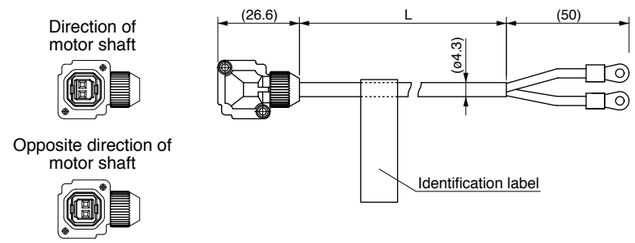


| Title | Part No. | Manufacturer |
|---|---|---|
| Connector | JN4FT02SJMR | Japan Aviation Electronics Ind. |
| Connector pin | ST-TMH-S-C1B-3500 | |
| Nylon insulated round terminal | N1.25-M4 | J.S.T Mfg. Co., Ltd. |
| Cable | AWG22 2-wire (ø4.3) | Hitachi Cable, Ltd. |

| L (m) | Part No. |
|---|---|
| 3 | MFMCB0030PJT |
| 5 | MFMCB0050PJT |
| 10 | MFMCB0100PJT |
| 20 | MFMCB0200PJT |

# Interface Cable

## Cable for Interface

| Part No. | DV0P4360 |
|---|---|

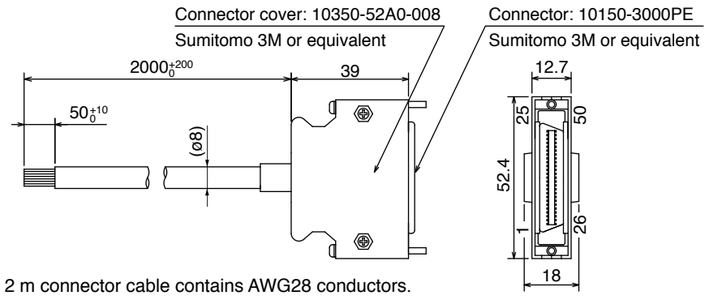


This 2 m connector cable contains AWG28 conductors.

• Table for wiring

| Pin No. | color | Pin No. | color | Pin No. | color | Pin No. | color | Pin No. | color |
|---|---|---|---|---|---|---|---|---|---|
| 1 | Orange (Red1) | 11 | Orange (Black2) | 21 | Orange (Red3) | 31 | Orange (Red4) | 41 | Orange (Red5) |
| 2 | Orange (Black1) | 12 | Yellow (Black1) | 22 | Orange (Black3) | 32 | Orange (Black4) | 42 | Orange (Black5) |
| 3 | Gray (Red1) | 13 | Gray (Red2) | 23 | Gray (Red3) | 33 | Gray (Red4) | 43 | Gray (Red5) |
| 4 | Gray (Black1) | 14 | Gray (Black2) | 24 | Gray (Black3) | 34 | White (Red4) | 44 | White (Red5) |
| 5 | White (Red1) | 15 | White (Red2) | 25 | White (Red3) | 35 | White (Black4) | 45 | White (Black5) |
| 6 | White (Black1) | 16 | Yellow (Red2) | 26 | White (Black3) | 36 | Yellow (Red4) | 46 | Yellow (Red5) |
| 7 | Yellow (Red1) | 17 | Yel (Blk2)/Pink (Blk2) | 27 | Yellow (Red3) | 37 | Yellow (Black4) | 47 | Yellow (Black5) |
| 8 | Pink (Red1) | 18 | Pink (Red2) | 28 | Yellow (Black3) | 38 | Pink (Red4) | 48 | Pink (Red5) |
| 9 | Pink (Black1) | 19 | White (Black2) | 29 | Pink (Red3) | 39 | Pink (Black4) | 49 | Pink (Black5) |
| 10 | Orange (Red2) | 20 | – | 30 | Pink (Black3) | 40 | Gray (Black4) | 50 | Gray (Black5) |

**<Remarks>**

Color designation of the cable e.g.) Pin-1 Cable color : Orange (Red1) : One red dot on the cable

The shield of this cable is connected to the connector shell but not to the terminal.

## Interface Conversion Cable

| Part No. | DV0P4120, 4121, 4130, 4131, 4132 |
|---|---|

Interface cables for old product (XX series or V series) can be connected to the current product by using the connector conversion cable shown below.

| | |
|---|---|
| **DV0P4120** | MINAS XX → A5Ⅱ, A5 series (A4, A series) for position control/ velocity control |
| **DV0P4121** | MINAS XX → A5Ⅱ, A5 series (A4, A series) for torque control |
| **DV0P4130** | MINAS V → A5Ⅱ, A5 series (A4, A series) for position control |
| **DV0P4131** | MINAS V → A5Ⅱ, A5 series (A4, A series) for velocity control |
| **DV0P4132** | MINAS V → A5Ⅱ, A5 series (A4, A series) for torque control |

* For details of wiring, contact our sales department.

Converts 36-pin configuration to 50-pin.

[Unit: mm]

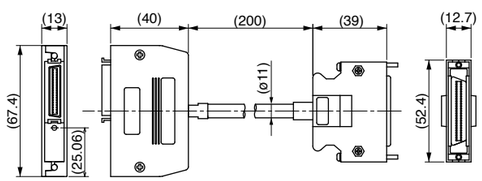


[DV0P4120, 4121]

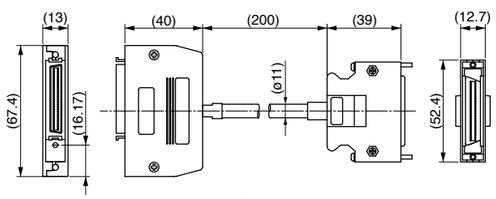


[DV0P4130, 4131, 4132]





# Connector Kit

## Connector Kit for Communication Cable (for RS485, RS232) (Excluding A5ⅡE, A5E Series)

| Part No. | DV0PM20024 |
|---|---|

• **Components**

| Title | Part No. | Manufacturer | Note |
|---|---|---|---|
| Connector | 2040008-1 | Tyco Electronics | For Connector X2 (8-pins) |

• Pin disposition of connector, connector X2

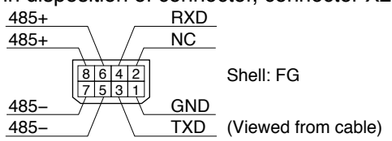


• Dimensions

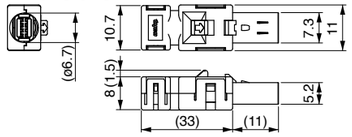


## Connector Kit for Safety (Excluding A5ⅡE, A5E Series)

| Part No. | DV0PM20025 |
|---|---|

• **Components**

| Title | Part No. | Manufacturer | Note |
|---|---|---|---|
| Connector | 2013595-1 | Tyco Electronics | For Connector X3 (8-pins) |

• Pin disposition of connector, connector X3

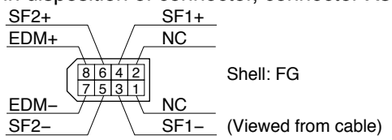


• Dimensions

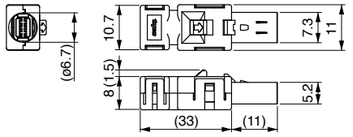


## Safety bypass plug (Excluding A5ⅡE, A5E Series)

| Part No. | DV0PM20094 |
|---|---|

• **Components**

| Title | Part No. | Manufacturer | Note |
|---|---|---|---|
| Connector | CIF-PB08AK-GF1R | J.S.T Mfg. Co., Ltd. | For Connector X3 |

• Internal wiring
(Wiring of the following has been applied inside the plug.)

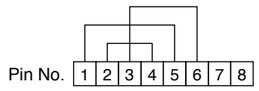


• Dimensions (Resin color : black)

[Unit: mm]

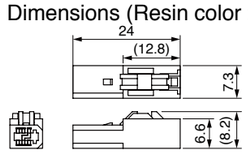


A design and color may vary from the plug provided together with driver. There is no difference in function.

## Connector Kit for Interface

| Part No. | DV0P4350 |
|---|---|

• **Components**

| Title | Part No. | Number | Manufacturer | Note |
|---|---|---|---|---|
| Connector | 10150-3000PE | 1 | Sumitomo 3M (or equivalent) | For Connector X4 (50-pins) |
| Connector cover | 10350-52A0-008 | 1 | | |

• Pin disposition (50 pins) (viewed from the soldering side)

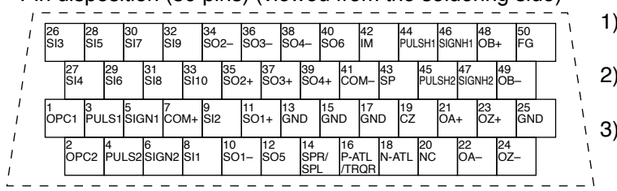


1) Check the stamped pin-No. on the connector body while making a wiring.
2) For the function of each signal title or its symbol, refer to the operating manual.
3) Do not connect anything to NC pins in the above table.

**<Remarks>**

• For crimp tool etc., necessary to produce a cable, access the web site of the manufacturer or consult with the manufacturer for details. For inquiries of manufacturer, refer to P.213 "List of Peripheral Equipments".

## Connector Kit for External Scale (Excluding A5IIE, A5E Series)

| Part No. | DV0PM20026 |
|---|---|

• **Components**

| Title | Part No. | Manufacturer | Note |
|---|---|---|---|
| Connector | MUF-PK10K-X | J.S.T Mfg. Co., Ltd. | For Connector X5 (10-pins) |

• Pin disposition of connector, connector X5

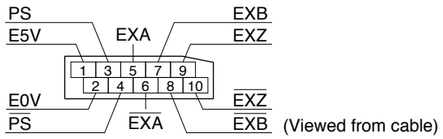


• Dimensions

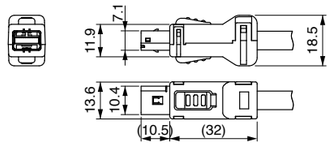


## Connector Kit for Encoder

| Part No. | DV0PM20010 |
|---|---|

• **Components**

| Title | Part No. | Manufacturer | Note |
|---|---|---|---|
| Connector (Driver side) | 3E206-0100 KV | Sumitomo 3M (or equivalent) | For Connector X6 |
| Shell kit | 3E306-3200-008 | | |

• Pin disposition of connector, connector X6

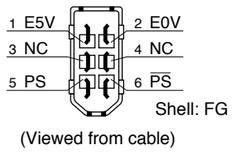


• Dimensions

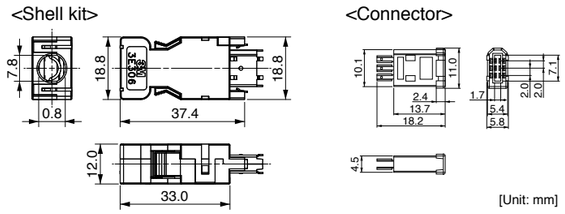


## Connector Kit for Analog Monitor Signal

| Part No. | DV0PM20031 |
|---|---|

• **Components**

| Title | Part No. | Number | Manufacturer | Note |
|---|---|---|---|---|
| Connector | 510040600 | 1 | Molex Inc | For Connector X7 (6-pins) |
| Connector pin | 500118100 | 6 | | |

• Pin disposition of connector, connector X7

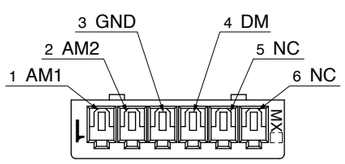


• Dimensions

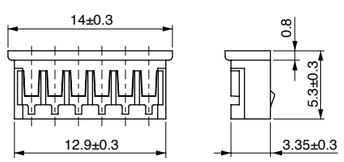


**<Remarks>**

Connector X1: use with commercially available cable.

• Configuration of connector X1: USB mini-B

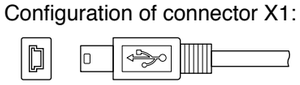



## Connector Kit for Power Supply Input

| Part No. | DV0PM20032 (For A-frame to C-frame 100 V, A-frame to D-frame 200 V: Single row type) |
|---|---|

• **Components**

| Title | Part No. | Number | Manufacturer | Note |
|---|---|---|---|---|
| Connector | 05JFAT-SAXGF | 1 | J.S.T Mfg. Co., Ltd. | For Connector XA |
| Handle lever | J-FAT-OT | 2 | | |

| Part No. | DV0PM20033 (For A-frame to D-frame 200 V: Double row type) |
|---|---|

• **Components**

| Title | Part No. | Number | Manufacturer | Note |
|---|---|---|---|---|
| Connector | 05JFAT-SAXGSA-C | 1 | J.S.T Mfg. Co., Ltd. | For Connector XA |
| Handle lever | J-FAT-OT | 2 | | |

• Dimensions

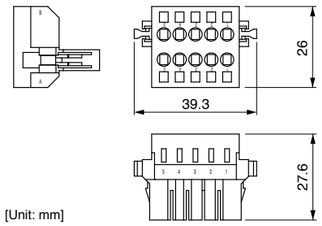


| Driver part No. | Power supply | Rated input current |
|---|---|---|
| MADHT1105 ***<br>MADKT1105 *** | Single phase<br>100 V | 1.7 A |
| MADHT1107 ***<br>MADKT1107 *** | Single phase<br>100 V | 2.6 A |
| MADHT1505 ***<br>MADKT1505 *** | Single phase/3-phase<br>200 V | 1.6 A/0.9 A |
| MADHT1507 ***<br>MADKT1507 *** | Single phase/3-phase<br>200 V | 2.4 A/1.3 A |
| MBDHT2110 ***<br>MBDKT2110 *** | Single phase<br>100 V | 4.3 A |
| MBDHT2510 ***<br>MBDKT2510 *** | Single phase/3-phase<br>200 V | 4.1 A/2.4 A |
| MCDHT3120 ***<br>MCDKT3120 *** | Single phase<br>100 V | 7.6 A |
| MCDHT3520 ***<br>MCDKT3520 *** | Single phase/3-phase<br>200 V | 6.6 A/3.6 A |
| MDDHT3530 ***<br>MDDKT3530 *** | Single phase/3-phase<br>200 V | 9.1 A/5.2 A |
| MDDHT5540 ***<br>MDDKT5540 *** | Single phase/3-phase<br>200 V | 14.2 A/8.1 A |

* When connection multiple axes in series, make sure the sum of the current value does not exceed the rated current (11.25 A) of DV0PM20033.

**Remarks**

When using drivers MDDKT5540 *** or MDDHT5540 *** in single-phase power supply, do not use DV0PM20033.

| Part No. | DV0PM20044 (For E-frame 200 V) |
|---|---|

• **Components**

| Title | Part No. | Number | Manufacturer | Note |
|---|---|---|---|---|
| Connector | 05JFAT-SAXGSA-L | 1 | J.S.T Mfg. Co., Ltd. | For Connector XA |
| Handle lever | J-FAT-OT-L | 2 | | |

| Part No. | DV0PM20051 (For D-frame 400 V) |
|---|---|

• **Components**

| Title | Part No. | Number | Manufacturer | Note |
|---|---|---|---|---|
| Connector | 03JFAT-SAYGSA-M | 1 | J.S.T Mfg. Co., Ltd. | For Connector XA |
| Handle lever | J-FAT-OT-L | 2 | | |

| Part No. | DV0PM20052 (For E-frame 400 V) |
|---|---|

• **Components**

| Title | Part No. | Number | Manufacturer | Note |
|---|---|---|---|---|
| Connector | 03JFAT-SAYGSA-L | 1 | J.S.T Mfg. Co., Ltd. | For Connector XA |
| Handle lever | J-FAT-OT-L | 2 | | |

# Connector Kit

## Connector Kit for Control Power Supply Input

| Part No. | **DV0PM20053** (For D, E-frame 400 V) |
|---|---|

• **Components**

| Title | Part No. | Number | Manufacturer | Note |
|---|---|---|---|---|
| Connector | 02MJFAT-SAGF | 1 | J.S.T Mfg. Co., Ltd. | For Connector XD |
| Handle lever | MJFAT-0T | 1 | | |

## Connector Kit for Regenerative Resistor Connection (E-frame)

| Part No. | **DV0PM20045** (For E-frame 200 V/400 V) |
|---|---|

• **Components**

| Title | Part No. | Number | Manufacturer | Note |
|---|---|---|---|---|
| Connector | 04JFAT-SAXGSA-L | 1 | J.S.T Mfg. Co., Ltd. | For Connector XC<br>* Jumper wire is included. |
| Handle lever | J-FAT-OT-L | 2 | | |

| Part No. | **DV0PM20055** (For D-frame 400 V) |
|---|---|

• **Components**

| Title | Part No. | Number | Manufacturer | Note |
|---|---|---|---|---|
| Connector | 04JFAT-SAXGSA-M | 1 | J.S.T Mfg. Co., Ltd. | For Connector XC |
| Handle lever | J-FAT-OT-L | 2 | | |

## Connector Kit for Motor Connection (Driver side)

| Part No. | **DV0PM20034** (For A-frame to C-frame 100 V, A-frame to D-frame 200 V) |
|---|---|

• **Components**

| Title | Part No. | Number | Manufacturer | Note |
|---|---|---|---|---|
| Connector | 06JFAT-SAXGF | 1 | J.S.T Mfg. Co., Ltd. | For Connector XB<br>* Jumper wire is included. |
| Handle lever | J-FAT-OT | 2 | | |

| Part No. | **DV0PM20046** (For E-frame 200 V/400 V) |
|---|---|

• **Components**

| Title | Part No. | Number | Manufacturer | Note |
|---|---|---|---|---|
| Connector | 03JFAT-SAXGSA-L | 1 | J.S.T Mfg. Co., Ltd. | For Connector XB |
| Handle lever | J-FAT-OT-L | 2 | | |

| Part No. | **DV0PM20054** (For D-frame 400 V) |
|---|---|

• **Components**

| Title | Part No. | Number | Manufacturer | Note |
|---|---|---|---|---|
| Connector | 03JFAT-SAXGSA-M | 1 | J.S.T Mfg. Co., Ltd. | For Connector XB |
| Handle lever | J-FAT-OT-L | 2 | | |





# Connector Kit

* When IP65 or IP67 are necessary, the customer must give appropriate processing.

## Connector Kit for Motor/Encoder Connection

| Part No. | **DV0P4290** | Applicable model | MSMD 50 W to 750 W, MHMD 200 W to 750 W<br>(absolute encoder type) |
|---|---|---|---|

• **Components**

| Title | Part No. | Number | Manufacturer | Note |
|---|---|---|---|---|
| Connector (Driver side) | 3E206-0100 KV | 1 | Sumitomo 3M<br>(or equivalent) | For Connector X6 (6-pins) |
| Shell kit | 3E306-3200-008 | 1 | | |
| Connector | 172161-1 | 1 | Tyco Electronics | For Encoder cable<br>(9-pins) |
| Connector pin | 170365-1 | 9 | | |
| Connector | 172159-1 | 1 | Tyco Electronics | For Motor cable<br>(4-pins) |
| Connector pin | 170366-1 | 4 | | |

• Pin disposition of connector, connector X6

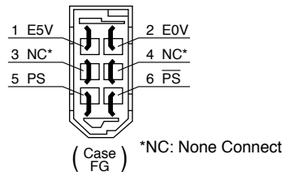


• Pin disposition of connector for encoder cable

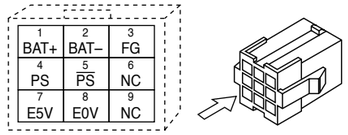


• Pin disposition of connector for motor cable

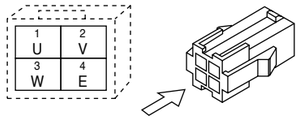


* When you connect the battery for absolute encoder, refer to P.207, "When you make your own cable for 17-bit absolute encoder"

| Part No. | **DV0P4380** | Applicable model | MSMD 50 W to 750 W, MHMD 200 W to 750 W<br>MSMJ 200 W to 750 W, MHMJ 200 W to 750 W<br>(incremental encoder type) |
|---|---|---|---|

• **Components**

| Title | Part No. | Number | Manufacturer | Note |
|---|---|---|---|---|
| Connector (Driver side) | 3E206-0100 KV | 1 | Sumitomo 3M<br>(or equivalent) | For Connector X6 (6-pins) |
| Shell kit | 3E306-3200-008 | 1 | | |
| Connector | 172160-1 | 1 | Tyco Electronics | For Encoder cable<br>(6-pins) |
| Connector pin | 170365-1 | 6 | | |
| Connector | 172159-1 | 1 | Tyco Electronics | For Motor cable<br>(4-pins) |
| Connector pin | 170366-1 | 4 | | |

• Pin disposition of connector, connector X6

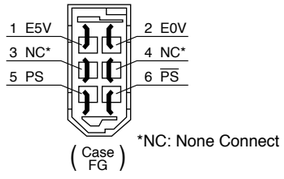


• Pin disposition of connector for encoder cable

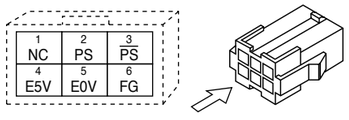


• Pin disposition of connector for motor cable

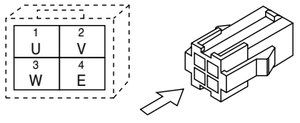

# Connector Kit

* When IP65 or IP67 are necessary, the customer must give appropriate processing.

| Part No. | DV0PM20035 | Applicable model | MSME 50 W to 400 W(100 V), 50 W to 750 W(200 V) |
|---|---|---|---|

• **Components**

| Title | Part No. | Number | Manufacturer | Note |
|---|---|---|---|---|
| Connector (Driver side) | 3E206-0100 KV | 1 | Sumitomo 3M (or equivalent) | For Connector X6 (6-pins) |
| Shell kit | 3E306-3200-008 | 1 | | |
| Encoder connector | JN6FR07SM1 | 1 | Japan Aviation Electronics Ind. | For Encoder cable (7-pins) |
| Socket contact | LY10-C1-A1-10000 | 7 | | |
| Motor connector | JN8FT04SJ1 | 1 | Japan Aviation Electronics Ind. | For Motor cable (4-pins) |
| Socket contact | ST-TMH-S-C1B-3500 | 4 | | |

• Pin disposition of connector, connector X6

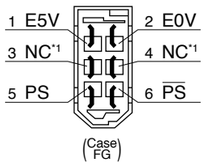


*1 NC: None Connect

• Pin disposition of connector for encoder cable

• Pin disposition of connector for motor cable

[Direction of motor shaft]

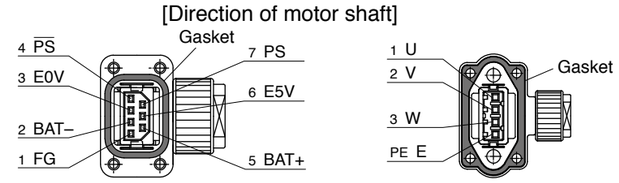


[Opposite direction of motor shaft]

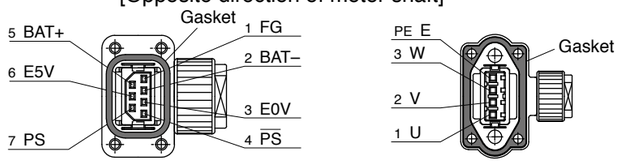


* Pins 2 and 5 are left unused (NC) with an incremental encoder.

**Remarks** Secure the gasket in place without removing it from the connector. Otherwise, the degree of protection of IP67 will not be guaranteed.

| Part No. | DV0PM20036 | Applicable model | <IP67 motor><br>MSME 750 W (400 V), 1.0 kW to 2.0 kW,<br>MDME 400 W (400 V), 600 W (400 V), 1.0 kW to 2.0 kW<br>MHME 1.0 kW to 1.5 kW, MGME 0.9 kW<br>(All model 200 V and 400 V commonness) | Without brake |
|---|---|---|---|---|

• **Components**

| Title | Part No. | Number | Manufacturer | Note |
|---|---|---|---|---|
| Connector (Driver side) | 3E206-0100 KV | 1 | Sumitomo 3M (or equivalent) | For Connector X6 (6-pins) |
| Shell kit | 3E306-3200-008 | 1 | | |
| Encoder connector | JN2DS10SL1-R | 1 | Japan Aviation Electronics Ind. | For Encoder cable |
| Connector pin | JN1-22-22S-PKG100 | 5 | | |
| Motor connector | JL04V-6A-20-4SE-EB-R | 1 | Japan Aviation Electronics Ind. | For Motor cable |
| Cable clamp | JL04-2022CK(14)-R | 1 | | |

**<Remarks>**

• For crimp tool etc., necessary to produce a cable, access the web site of the manufacturer or consult with the manufacturer for details. For inquiries of manufacturer, refer to P.213 "List of Peripheral Equipments".



| Part No. | DV0P4310 | Applicable model | <IP65 motor><br>MSME 750 W (400 V), 1.0 kW to 2.0 kW<br>MDME 400 W (400 V), 600 W (400 V), 1.0 kW to 2.0 kW<br>MHME 1.0 kW to 1.5 kW, MGME 0.9 kW | Without brake |
|---|---|---|---|---|

• **Components**

| Title | Part No. | Number | Manufacturer | Note |
|---|---|---|---|---|
| Connector (Driver side) | 3E206-0100 KV | 1 | Sumitomo 3M (or equivalent) | For Connector X6 (6-pins) |
| Shell kit | 3E306-3200-008 | 1 | | |
| Encoder connector | N/MS3106B20-29S | 1 | Japan Aviation Electronics Ind. | For Encoder cable |
| Cable clamp | N/MS3057-12A | 1 | | |
| Motor connector | N/MS3106B20-4S | 1 | Japan Aviation Electronics Ind. | For Motor cable |
| Cable clamp | N/MS3057-12A | 1 | | |

| Part No. | DV0PM20037 | Applicable model | <IP67 motor><br>MSME 3.0 kW to 5.0 kW, MDME 3.0 kW to 5.0 kW<br>MHME 2.0 kW to 5.0 kW, MGME 2.0 kW to 4.5 kW<br>(All model 200 V and 400 V commonness) | Without brake |
|---|---|---|---|---|

• **Components**

| Title | Part No. | Number | Manufacturer | Note |
|---|---|---|---|---|
| Connector (Driver side) | 3E206-0100 KV | 1 | Sumitomo 3M (or equivalent) | For Connector X6 (6-pins) |
| Shell kit | 3E306-3200-008 | 1 | | |
| Encoder connector | JN2DS10SL1-R | 1 | Japan Aviation Electronics Ind. | For Encoder cable |
| Connector pin | JN1-22-22S-PKG100 | 5 | | |
| Motor connector | JL04V-6A22-22SE-EB-R | 1 | Japan Aviation Electronics Ind. | For Motor cable |
| Cable clamp | JL04-2022CK(14)-R | 1 | | |

| Part No. | DV0P4320 | Applicable model | <IP65 motor><br>MSME 3.0 kW to 5.0 kW, MDME 3.0 kW to 5.0 kW<br>MHME 2.0 kW to 5.0 kW, MGME 2.0 kW to 4.5 kW | Without brake |
|---|---|---|---|---|

• **Components**

| Title | Part No. | Number | Manufacturer | Note |
|---|---|---|---|---|
| Connector (Driver side) | 3E206-0100 KV | 1 | Sumitomo 3M (or equivalent) | For Connector X6 (6-pins) |
| Shell kit | 3E306-3200-008 | 1 | | |
| Encoder connector | N/MS3106B20-29S | 1 | Japan Aviation Electronics Ind. | For Encoder cable |
| Cable clamp | N/MS3057-12A | 1 | | |
| Motor connector | N/MS3106B22-22S | 1 | Japan Aviation Electronics Ind. | For Motor cable |
| Cable clamp | N/MS3057-12A | 1 | | |

| Part No. | DV0PM20038 | Applicable model | <IP67 motor><br>MSME 1.0 kW to 2.0 kW, MDME 1.0 kW to 2.0 kW<br>MFME 1.5 kW (Common to with/ without brake),<br>MHME 1.0 kW to 1.5 kW, MGME 0.9 kW<br>(All model 200 V) | With brake |
|---|---|---|---|---|

• **Components**

| Title | Part No. | Number | Manufacturer | Note |
|---|---|---|---|---|
| Connector (Driver side) | 3E206-0100 KV | 1 | Sumitomo 3M (or equivalent) | For Connector X6 (6-pins) |
| Shell kit | 3E306-3200-008 | 1 | | |
| Encoder connector | JN2DS10SL1-R | 1 | Japan Aviation Electronics Ind. | For Encoder cable |
| Connector pin | JN1-22-22S-PKG100 | 5 | | |
| Motor connector | JL04V-6A20-18SE-EB-R | 1 | Japan Aviation Electronics Ind. | For Motor cable |
| Cable clamp | JL04-2022CK(14)-R | 1 | | |

# Connector Kit

* When IP65 or IP67 are necessary, the customer must give appropriate processing.

| Part No. | DV0P4330 | Applicable model | <IP65 motor><br>MSME 1.0 kW to 2.0 kW, MDME 1.0 kW to 2.0 kW<br>MHME 1.0 kW to 1.5 kW, MGME 0.9 kW<br>(All model 200 V) | With brake |
|---|---|---|---|---|

• **Components**

| Title | Part No. | Number | Manufacturer | Note |
|---|---|---|---|---|
| Connector (Driver side) | 3E206-0100 KV | 1 | Sumitomo 3M (or equivalent) | For Connector X6 (6-pins) |
| Shell kit | 3E306-3200-008 | 1 | | |
| Encoder connector | N/MS3106B20-29S | 1 | Japan Aviation Electronics Ind. | For Encoder cable |
| Cable clamp | N/MS3057-12A | 1 | | |
| Motor connector | N/MS3106B20-18S | 1 | Japan Aviation Electronics Ind. | For Motor cable |
| Cable clamp | N/MS3057-12A | 1 | | |

| Part No. | DV0PM20039 | Applicable model | <IP67 motor><br>(200V)<br>MSME 3.0 kW to 5.0 kW, MDME 3.0 kW to 5.0 kW<br>MFME 2.5 kW to 4.5 kW (Common to with/ without brake),<br>MHME 2.0 kW to 5.0 kW, MGME 2.0 kW to 4.5 kW<br>(400V)<br>MSME 750 W to 5.0 kW, MDME 400 W to 5.0 kW<br>MFME 1.5 kW to 4.5 kW (Common to with/ without brake),<br>MHME 1.0 kW to 5.0 kW, MGME 0.9 kW to 4.5 kW | With brake |
|---|---|---|---|---|

• **Components**

| Title | Part No. | Number | Manufacturer | Note |
|---|---|---|---|---|
| Connector (Driver side) | 3E206-0100 KV | 1 | Sumitomo 3M (or equivalent) | For Connector X6 (6-pins) |
| Shell kit | 3E306-3200-008 | 1 | | |
| Encoder connector | JN2DS10SL1-R | 1 | Japan Aviation Electronics Ind. | For Encoder cable |
| Connector pin | JN1-22-22S-PKG100 | 5 | | |
| Motor connector | JL04V-6A24-11SE-EB-R | 1 | Japan Aviation Electronics Ind. | For Motor cable |
| Cable clamp | JL04-2428CK(17)-R | 1 | | |

| Part No. | DV0P4340 | Applicable model | <IP65 motor><br>(200V)<br>MSME 3.0 kW to 5.0 kW, MDME 3.0 kW to 5.0 kW<br>MHME 2.0 kW to 5.0 kW, MGME 2.0 kW to 3.0 kW<br>(400V)<br>MSME 750 W to 5.0 kW, MDME 400 W to 5.0 kW<br>MHME 1.0 kW to 5.0 kW, MGME 0.9 kW to 3.0 kW | With brake |
|---|---|---|---|---|

• **Components**

| Title | Part No. | Number | Manufacturer | Note |
|---|---|---|---|---|
| Connector (Driver side) | 3E206-0100 KV | 1 | Sumitomo 3M (or equivalent) | For Connector X6 (6-pins) |
| Shell kit | 3E306-3200-008 | 1 | | |
| Encoder connector | N/MS3106B20-29S | 1 | Japan Aviation Electronics Ind. | For Encoder cable |
| Cable clamp | N/MS3057-12A | 1 | | |
| Motor connector | N/MS3106B24-11S | 1 | Japan Aviation Electronics Ind. | For Motor cable |
| Cable clamp | N/MS3057-16A | 1 | | |

**<Remarks>**
• For crimp tool etc., necessary to produce a cable, access the web site of the manufacturer or consult with the manufacturer for details. For inquiries of manufacturer, refer to P.213 "List of Peripheral Equipments".



| Part No. | DV0PM20056 | Applicable model | <IP67 motor><br>MDME 7.5 kW to 15.0 kW<br>MGME 6.0 kW, MHME 7.5 kW | Without brake |
|---|---|---|---|---|

• **Components**

| Title | Part No. | Number | Manufacturer | Note |
|---|---|---|---|---|
| Connector (Driver side) | 3E206-0100 KV | 1 | Sumitomo 3M (or equivalent) | For Connector X6 (6-pins) |
| Shell kit | 3E306-3200-008 | 1 | | |
| Encoder connector | JN2DS10SL1-R | 1 | Japan Aviation Electronics Ind. | For Encoder cable |
| Connector pin | JN1-22-22S-PKG100 | 5 | | |
| Motor connector | JL04V-6A32-17SE-EB-R | 1 | Japan Aviation Electronics Ind. | For Motor cable |
| Cable clamp | JL04-32CK(24)-R * | 1 | | |

* Cable cover size: Φ22 to Φ25. Cable core material is not specified. The user can select the cable compatible with the connector to be used.

| Part No. | DV0PM20057 | Applicable model | <IP67 motor><br>MDME 7.5 kW to 15.0 kW<br>MGME 6.0 kW, MHME 7.5 kW | With brake |
|---|---|---|---|---|

• **Components**

| Title | Part No. | Number | Manufacturer | Note |
|---|---|---|---|---|
| Connector (Driver side) | 3E206-0100 KV | 1 | Sumitomo 3M (or equivalent) | For Connector X6 (6-pins) |
| Shell kit | 3E306-3200-008 | 1 | | |
| Encoder connector | JN2DS10SL1-R | 1 | Japan Aviation Electronics Ind. | For Encoder cable |
| Connector pin | JN1-22-22S-PKG100 | 5 | | |
| Motor connector | JL04V-6A32-17SE-EB-R | 1 | Japan Aviation Electronics Ind. | For Motor cable |
| Cable clamp | JL04-32CK(24)-R * | 1 | | |
| Brake connector | N/MS3106B14S-2S | 1 | Japan Aviation Electronics Ind. | For Brake cable |
| Cable clamp | N/MS3057-6A | 1 | | |

* Cable cover size: Φ22 to Φ25. Cable core material is not specified. The user can select the cable compatible with the connector to be used.

## Connector Kit for Motor/Brake Connection

| Part No. | DV0PM20040 | Applicable model | MSME 50 W to 750 W |
|---|---|---|---|

• **Components**

| Title | Part No. | Number | Manufacturer | Note |
|---|---|---|---|---|
| Connector | JN4FT02SJM-R | 1 | Japan Aviation Electronics Ind. | For brake cable |
| Socket contact | ST-TMH-S-C1B-3500 | 2 | | |

• Pin disposition of connector for brake cable

[Direction of motor shaft]

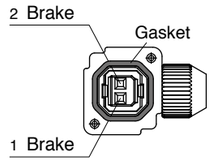


[Opposite direction of motor shaft]

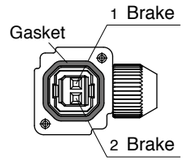


**<Remarks>**
Secure the gasket in place without removing it from the connector.
Otherwise, the degree of protection of IP67 will not be guaranteed.

**<Remarks>**
• For crimp tool etc., necessary to produce a cable, access the web site of the manufacturer or consult with the manufacturer for details. For inquiries of manufacturer, refer to P.213 "List of Peripheral Equipments".

# Battery for Absolute Encoder

* A5ⅡE, A5E series does not support to absolute encoder.

## Battery for Absolute Encoder

| Part No. | DV0P2990 |
|---|---|

• Lithium battery: 3.6 V 2000 mAh

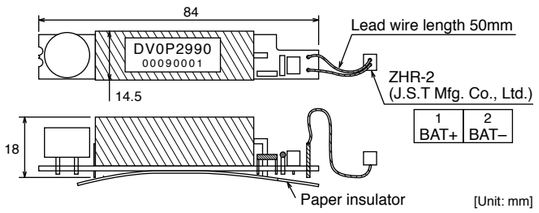


**<Caution>**
This battery is categorized as hazardous substance, and you may be required to present an application of hazardous substance when you transport by air (both passenger and cargo airlines).

## Battery Box for Absolute Encoder *

* Battery is not included. Please buy the absolute encoder battery "DV0P2990" separately.

| Part No. | DV0P4430 |
|---|---|

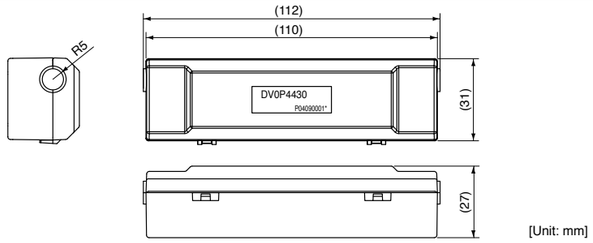


## When waking a cable for 17-bit absolute encoder by yourself

When you make your own cable for 17-bit absolute encoder, connect the optional battery for absolute encoder, DV0P2990 as per the wiring diagram below. Connector of the battery for absolute encoder shall be provided by customer as well.

**<Caution>**
Install and fix the battery securely. If the installation and fixing of the battery is not appropriate, it may cause the wire breakdown or damage of the battery.
Refer to the instruction manual of the battery for handling the battery.

• **Installation Place of Battery**
1) Indoors, where the products are not subjected to rain or direct sun beam.
2) Where the products are not subjected to corrosive atmospheres such as hydrogen sulfide, sulfurous acid, chlorine, ammonia, chloric gas, sulfuric gas, acid, alkaline and salt and so on, and are free from splash of inflammable gas, grinding oil, oil mist, iron powder or chips and etc.
3) Well-ventilated and humid and dust-free place.
4) Vibration-free place

• **Wiring Diagram**

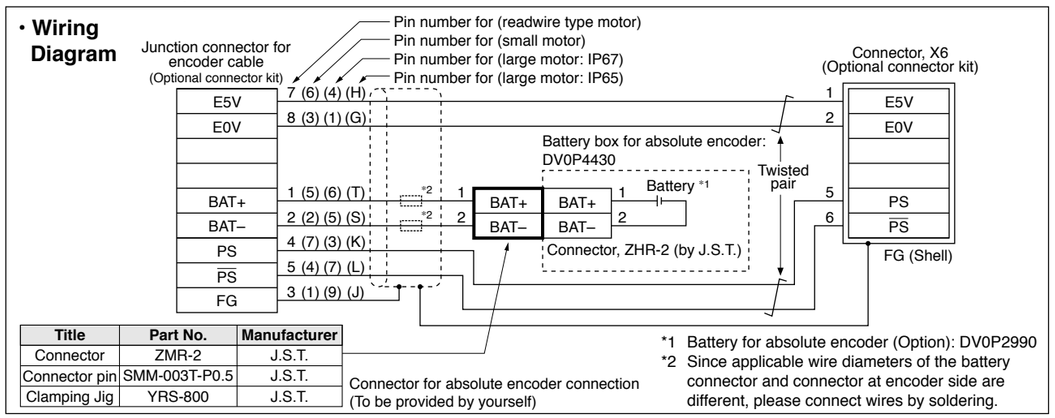


| Title | Part No. | Manufacturer |
|---|---|---|
| Connector | ZMR-2 | J.S.T. |
| Connector pin | SMM-003T-P0.5 | J.S.T. |
| Clamping Jig | YRS-800 | J.S.T. |





# Mounting Bracket

| Part No. | DV0PM20027 | Frame symbol of applicable driver | A-frame | Mounting screw | M4 × L6 Pan head 4pcs |
|---|---|---|---|---|---|

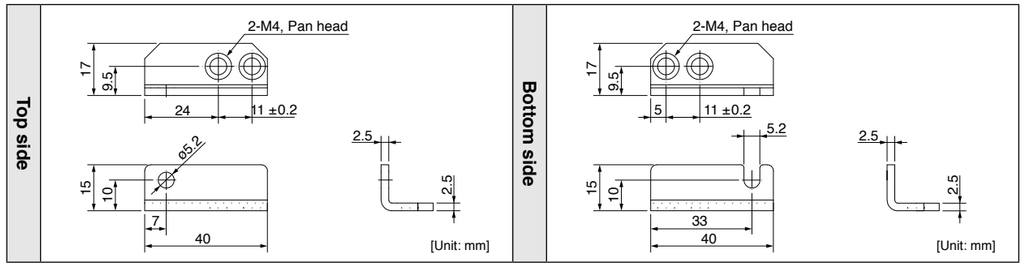


| Part No. | DV0PM20028 | Frame symbol of applicable driver | B-frame | Mounting screw | M4 × L6 Pan head 4pcs |
|---|---|---|---|---|---|

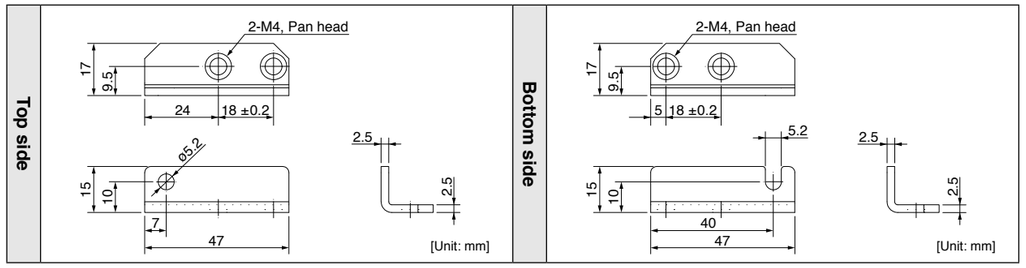


| Part No. | DV0PM20029 | Frame symbol of applicable driver | C-frame | Mounting screw | M4 × L6 Pan head 4pcs |
|---|---|---|---|---|---|

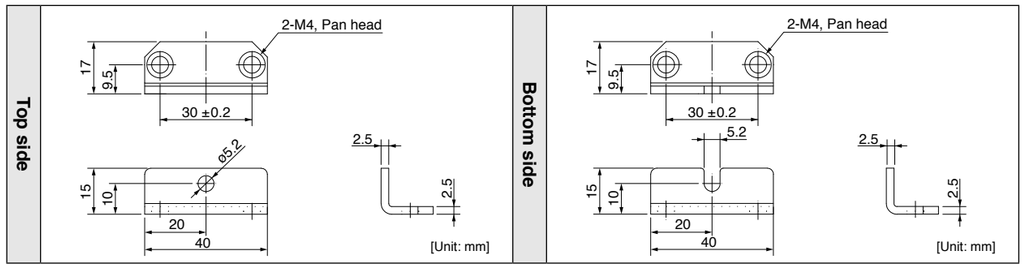


| Part No. | DV0PM20030 | Frame symbol of applicable driver | D-frame | Mounting screw | M4 × L6 Pan head 4pcs |
|---|---|---|---|---|---|

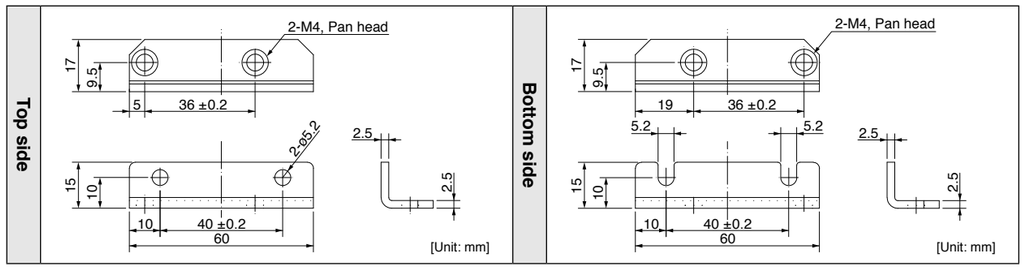


**<Caution>**
For E, F and G-frame, it is possible to make both a front end and back end mounting by changing the mounting direction of L-shape bracket (attachment).

# Reactor

Fig.1

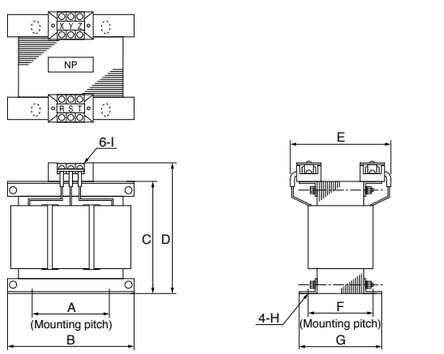


Fig.2

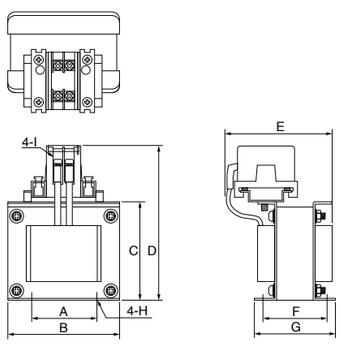


• Wiring of the reactor <3-Phase>

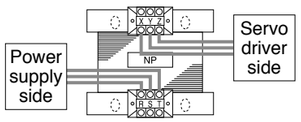


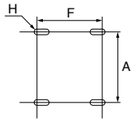


F: Center-to-center distance on outer circular arc

• Wiring of the reactor <Single phase>

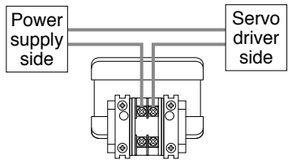


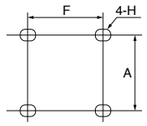


F: Center-to-center distance on slotted hole

[Unit: mm]

| | Part No. | A | B | C | D | E (Max) | F | G | H | I | Inductance (mH) | Rated current (A) |
|---|---|---|---|---|---|---|---|---|---|---|---|---|
| Fig.1 | **DV0P220** | 65±1 | 125±1 | (93) | 136 Max | 155 | 70+3/–0 | 85±2 | 4-7ϕ×12 | M4 | 6.81 | 3 |
| | **DV0P221** | 60±1 | 150±1 | (113) | 155 Max | 130 | 60+3/–0 | 75±2 | 4-7ϕ×12 | M4 | 4.02 | 5 |
| | **DV0P222** | 60±1 | 150±1 | (113) | 155 Max | 140 | 70+3/–0 | 85±2 | 4-7ϕ×12 | M4 | 2 | 8 |
| | **DV0P223** | 60±1 | 150±1 | (113) | 155 Max | 150 | 79+3/–0 | 95±2 | 4-7ϕ×12 | M4 | 1.39 | 11 |
| | **DV0P224** | 60±1 | 150±1 | (113) | 160 Max | 155 | 84+3/–0 | 100±2 | 4-7ϕ×12 | M5 | 0.848 | 16 |
| | **DV0P225** | 60±1 | 150±1 | (113) | 160 Max | 170 | 100+3/–0 | 115±2 | 4-7ϕ×12 | M5 | 0.557 | 25 |
| Fig.2 | **DV0P227** | 55±0.7 | 80±1 | 66.5±1 | 110 Max | 90 | 41±2 | 55±2 | 4-5ϕ×10 | M4 | 4.02 | 5 |
| | **DV0P228** | 55±0.7 | 80±1 | 66.5±1 | 110 Max | 95 | 46±2 | 60±2 | 4-5ϕ×10 | M4 | 2 | 8 |
| | **DV0PM20047** | 55±0.7 | 80±1 | 66.5±1 | 110 Max | 105 | 56±2 | 70±2 | 4-5ϕ×10 | M4 | 1.39 | 11 |

* For application, refer to P.21 to P.28 and P.153 to P.154 “Table of Part Numbers and Options”.

## Harmonic restraint

Harmonic restraint measures are not common to all countries. Therefore, prepare the measures that meet the requirements of the destination country.
With products for Japan, on September, 1994, “Guidelines for harmonic restraint on heavy consumers who receive power through high voltage system or extra high voltage system” and “Guidelines for harmonic restraint on household electrical appliances and general-purpose articles” established by the Agency for Natural Resources and Energy of the Ministry of Economy, Trade and Industry (the ex-Ministry of International Trade and Industry). According to those guidelines, the Japan Electrical Manufacturers’ Association (JEMA) have prepared technical documents (procedure to execute harmonic restraint: JEM-TR 198, JEM-TR 199 and JEM-TR 201) and have been requesting the users to understand the restraint and to cooperate with us. On January, 2004, it has been decided to exclude the general-purpose inverter and servo driver from the “Guidelines for harmonic restraint on household electrical appliances and general-purpose articles”. After that, the “Guidelines for harmonic restraint on household electrical appliances and general-purpose articles” was abolished on September 6, 2004.
We are pleased to inform you that the procedure to execute the harmonic restraint on general-purpose inverter and servo driver was modified as follows.

1. All types of the general-purpose inverters and servo drivers used by specific users are under the control of the “Guidelines for harmonic restraint on heavy consumers who receive power through high voltage system or extra high voltage system”. The users who are required to apply the guidelines must calculate the equivalent capacity and harmonic current according to the guidelines and must take appropriate countermeasures if the harmonic current exceeds a limit value specified in a contract demand. (Refer to JEM-TR 210 and JEM-TR 225.)
2. The “Guidelines for harmonic restraint on household electrical appliances and general-purpose articles” was abolished on September 6, 2004. However, based on conventional guidelines, JEMA applies the technical documents JEM-TR 226 and JEM-TR 227 to any users who do not fit into the “Guidelines for harmonic restraint on heavy consumers who receive power through high voltage system or extra high voltage system” from a perspective on enlightenment on general harmonic restraint. The purpose of these guidelines is the execution of harmonic restraint at every device by a user as usual to the utmost extent.

**<Remarks>** When using a reactor, be sure to install one reactor to one servo driver.





# External Regenerative Resistor

| Part No. | Manufacturer's part No. | Specifications | | | | | Activation temperature of built-in thermal protector |
|---|---|---|---|---|---|---|---|
| | | Resistance | cable core outside diameter | Weight | Rated power (reference) *1 | | |
| | | | | | Free air | with fan 1 m/s | |
| | | Ω | mm | kg | W | W | |
| DV0P4280 | RF70M | 50 | ϕ1.27 (AWG18 stranded wire) | 0.1 | 10 | 25 | 140±5 ˚C B-contact Open/Close capacity (resistance load) 1 A 125 VAC 6000 times 0.5 A 250 VAC 10000 times |
| DV0P4281 | RF70M | 100 | | 0.1 | 10 | 25 | |
| DV0P4282 | RF180B | 25 | | 0.4 | 17 | 50 | |
| DV0P4283 | RF180B | 50 | | 0.2 | 17 | 50 | |
| DV0P4284 | RF240 | 30 | | 0.5 | 40 | 100 | |
| DV0P4285 | RH450F | 20 | | 1.2 | 52 | 130 | |
| DV0PM20048 | RF240 | 120 | | 0.5 | 35 | 80 | |
| DV0PM20049 | RH450F | 80 | | 1.2 | 65 | 190 | |
| DV0PM20058 | RH450F × 6 | 3.3 | — *2 | 16 | — *3 | 780 | |
| DV0PM20059 | RH450F × 6 | 13.3 | — *2 | 16 | — *3 | 1140 | |

Manufacturer : Iwaki Musen Kenkyusho

*1 Power with which the driver can be used without activating the built-in thermal protector.
A built-in thermal fuse and a thermal protector are provided for safety.
The circuit should be so designed that the power supply will be turned off as the thermal protector operates.
The built-in thermal fuse blows depending on changes in heat dissipation condition, operating temperature limit, power supply voltage or load.
Mount the regenerative resistor on a machine operating under aggressive regenerating condition (high power supply voltage, large load inertia, shorter deceleration time, etc.) and make sure that the surface temperature will not exceed 100 °C.
Attach the regenerative resistor to a nonflammable material such as metal.
Cover the regenerative resistor with a nonflammable material so that it cannot be directly touched.
Temperatures of parts that may be directly touched by people should be kept below 70 °C.

*2 Terminal block with screw tightening torque as shown below.
T1, T2, 24 V, 0 V, E : M4 : 1.2 N·m to 1.4 N·m
R1, R2 : M5 : 2.0 N·m to 2.4 N·m
Use the cable with the same diameter as the main circuit cable. (Refer to P.19).

*3 With built-in fan which should always be operated with the power supply connected across 24 V and 0 V.

| Frame | Power supply | | |
|---|---|---|---|
| | Single phase, 100 V | Single phase, 200 V 3-phase, 200 V | 3-phase, 400 V |
| A | DV0P4280 | DV0P4281 (50 W, 100 W) DV0P4283 (200 W) | — |
| B | DV0P4283 | DV0P4283 | |
| C | DV0P4282 | | |
| D | — | DV0P4284 | DV0PM20048 |
| E | | DV0P4284 × 2 in parallel or DV0P4285 | DV0PM20049 |
| F | | DV0P4285 × 2 in parallel | DV0PM20049 × 2 in parallel |
| G | | DV0P4285 × 3 in parallel | DV0PM20049 × 3 in parallel |
| H | | DV0P4285 × 6 in parallel or DV0PM20058 | DV0PM20049 × 6 in parallel or DV0PM20059 |

DV0P4280, DV0P4281

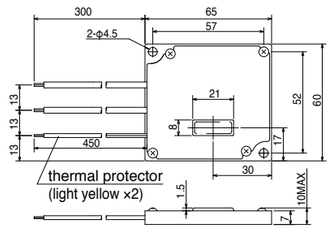


[Unit: mm]

DV0P4282, DV0P4283

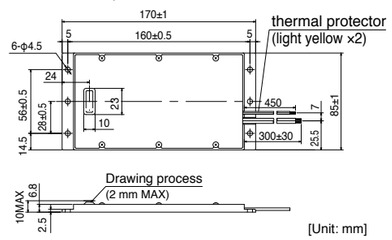


[Unit: mm]

# External Regenerative Resistor

DV0P4284, DV0PM20048

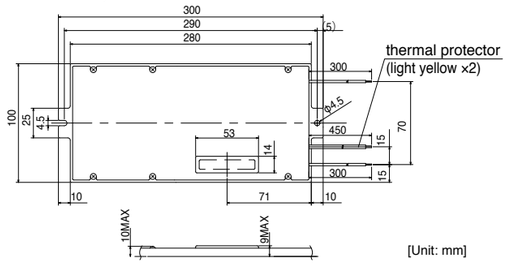


DV0P4285, DV0PM20049

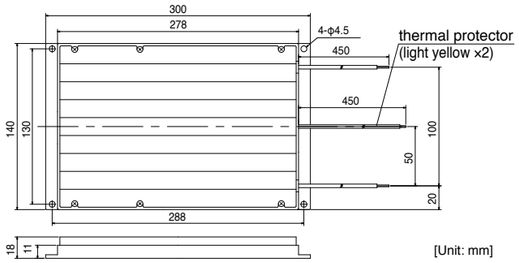


DV0PM20058, DV0PM20059

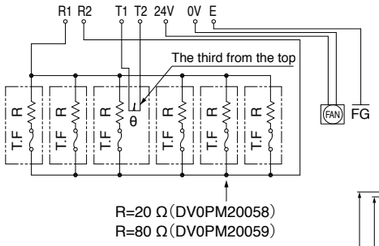


Circuit diagram

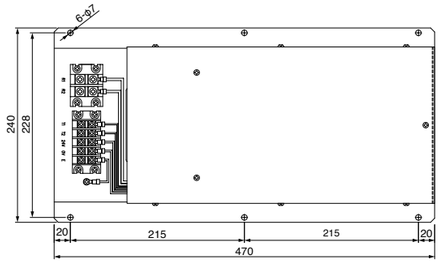

[Unit: mm]

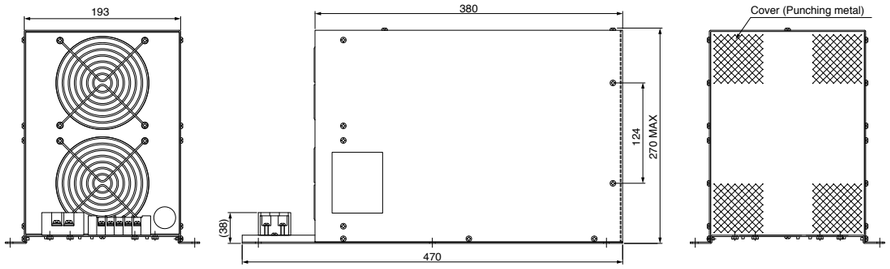


**<Caution when using external regenerative resistor>**

| Regenerative resistor gets very hot. |
|---|
| Configure a circuit so that a power supply shuts down when built-in thermal protector of the regenerative resistor works. Because it is automatic reset thermal protector, please apply a self-holding circuit to the outside in order to maintain safety in case of sudden activation. During the failure of the driver, the surface temperature of the regenerative resistor may exceed the operating temperature before thermal protector starts to work.<br>Built-in thermal fuse of regenerative resistor is intended to prevent from ignition during the failure of the driver and not intended to suppress the surface temperature of the resistor.<br>• Be attached the regenerative resistance to non-combustible material such as metal.<br>• Built-in thermal fuse of regenerative resistor is intended to prevent from ignition during the failure of the driver and not intended to suppress the surface temperature of the resistor.<br>• Do not install the regenerative resistor near flammable materials. |





# Surge Absorber for Motor Brake

| Motor | | Part No. | Manufacturer |
|---|---|---|---|
| MSMD | 50 W to 750 W | Z15D271 or TNR15G271K | SEMITEC Corporation or NIPPON CHEMI-CON CORPORATION |
| MSMJ | 200 W to 750 W | | |
| MSME | 50 W to 750 W | | |
| | 750 W (400 V)<br>1.0 kW to 5.0 kW | Z15D151 | SEMITEC Corporation |
| MDME | 400 W (400 V), 600 W (400 V) | | |
| | 1.0 kW to 3.0 kW | NVD07SCD082 | KOA Corporation |
| | 4.0 kW to 7.5 kW | Z15D151 | SEMITEC Corporation |
| | 11 kW, 15 kW | NVD07SCD082 | KOA Corporation |
| MFME | 1.5 kW | | |
| | 2.5 kW, 4.5 kW | | |
| MGME | 0.9 kW to 6.0 kW | Z15D151 | SEMITEC Corporation |
| MHMD<br>MHMJ | 200 W to 750 W | Z15D271 or TNR15G271K | SEMITEC Corporation or NIPPON CHEMI-CON CORPORATION |
| MHME | 1.0 kW, 1.5 kW | NVD07SCD082 | KOA Corporation |
| | 2.0 kW to 7.5 kW | Z15D151 | SEMITEC Corporation |

# List of Peripheral Equipments

| Manufacturer | Tel No. / Home Page | Peripheral components |
|---|---|---|
| Panasonic Corporation<br>Eco Solutions Company | http://panasonic.net/es/ | Circuit breaker |
| Panasonic Corporation<br>Automotive & Industrial Systems Company | http://panasonic.net/id/ | Surge absorber<br>Switch, Relay |
| Iwaki Musen Kenkyusho Co., Ltd. | +81-44-833-4311<br>http://www.iwakimusen.co.jp/ | Regenerative resistor |
| KOA Corporation | +81-42-336-5300<br>http://www.koanet.co.jp/en/index.htm | Surge absorber for holding brake |
| NIPPON CHEMI-CON CORPORATION | +81-3-5436-7711<br>http://www.chemi-con.co.jp/e/index.html | |
| SEMITEC Corporation | +81-3-3621-2703<br>http://www.semitec.co.jp/english2/ | |
| KK-CORP.CO.JP | +81-184-53-2307<br>http://www.kk-corp.co.jp/ | Noise filter for signal lines |
| MICROMETALS<br>(Nisshin Electric Co., Ltd.) | +81-4-2934-4151<br>http://www.nisshin-electric.com/ | |
| TDK Corporation | +81-3-5201-7229<br>http://www.global.tdk.com/ | |
| Okaya Electric Industries Co. Ltd. | +81-3-4544-7040<br>http://www.okayaelec.co.jp/english/index.html | Surge absorber<br>Noise filter |
| Japan Aviation Electronics Industry, Ltd. | +81-3-3780-2717<br>http://www.jae.co.jp/e-top/index.html | Connector |
| Japan Molex Inc. | +81-462-65-2313<br>http://www.molex.co.jp | |
| J.S.T. Mfg. Co., Ltd. | +81-45-543-1271<br>http://www.jst-mfg.com/index_e.php | |
| Sumitomo 3M | +81-3-5716-7290<br>http:/solutions.3m.com/wps/portal/3M/ja_JP/WW2/Country/ | |
| Tyco Electronics | +81-44-844-8052<br>http://www.te.com/ja/home.html | |
| DYDEN CORPORATION | +81-3-5805-5880<br>http://www.dyden.co.jp/english/index.htm | Cable |
| DR. JOHANNES HEIDENHAIN GmbH | +81-3-3234-7781<br>http://www.heidenhain.de/de_EN/company/contact/ | External scale |
| Fagor Automation S.Coop. | +34-943-719-200<br>http://www.fagorautomation.com | |
| Magnescale Co., Ltd. | +81-463-92-7971<br>http://www.mgscale.com/mgs/language/english/ | |
| Mitutoyo Corporation | +81-44-813-8234<br>http://www.mitutoyo.co.jp/eng/ | |
| Nidec Sankyo Corporation | +81-3-5740-3006<br>http://www.nidec-sankyo.co.jp/ | |
| Renishaw plc | +44 1453 524524<br>www.renishaw.com | |
| Schaffner EMC, Inc. | +81-3-5712-3650<br>http://www.schaffner.jp/ | Noise filter |
| TDK-Lambda Corporation | +81-3-5201-7140<br>http://www.tdk-lambda.com/ | |

* The above list is for reference only. We may change the manufacturer without notice.



MEMO

# Compact Servo Only for Position Control.

**Ultra compact position control type**

# MINAS E Series

## 1 Best Fit to Small Drives

- Further evolution in down-sizing, by 47 % in size. (Note)
- Exclusively designed for position control.

(Note) Compared to MUDS043A1

## 2 Easy to Handle, Easy to Use

- DIN-rail mounting unit (option) improves handling/installation.
- User-friendly Console makes the setup easy.
- High functionality Real-Time Auto-Gain Tuning enables adjustment-free operation.

Console
Option

## 3 High-Speed Positioning with Resonance Suppression Filters

- Built-In notch filter suppresses resonance of the machine.
- Built-in adaptive filter detect resonance frequency and suppress vibration.

## 4 Smoother operation for Low Stiffness Machine

- Damping control function suppresses vibration during acceleration/deceleration





Contents

**Features** ..... 215
**Motor Line-up** ..... 219
**Model Designation** ..... 220
**Overall Wiring** ..... 221
**Driver and List of Applicable Peripheral Equipments** ..... 221
**Driver** ..... 223
Driver Specifications ..... 223
Standard Wiring Example of Main Circuit ..... 224
Encorder Wiring Diagram ..... 224
Control Circuit Standard Wiring Example ..... 225
Dimensions of Driver ..... 226
**Motor** ..... 227
Specifications/Model designation/Torque Characteristics ..... 227
Dimensions of Moter ..... 231
Motors with Gear Reducer ..... 232
**Options** ..... 236
Setup Support Software ..... 236
Cable part No. Designation ..... 237
Cable Set ..... 238
Encoder Cable ..... 238
Motor Cable ..... 238
Brake Cable ..... 238
Connector Kit ..... 239
Interface Cable ..... 241
Communication Cable ..... 241
Console ..... 241
DIN Rail Mounting Unit ..... 242
External Regenerative Resistor ..... 242
Reactor ..... 243
Surge Absorber for Motor Brake ..... 243
List of Peripheral Components ..... 244

# 1. Easy to Handle, Easy to Use

## High-functionality Real-Time Auto-Gain Tuning (Note 1)

- Offers real automatic gain tuning for low and high stiffness machines with a combination of an adaptive filter.
- Supports the vertical axis application where the load torque is different in rotational direction.

## DIN-rail mounting unit (option)

- DIN-rail mounting unit allows parallel mounting with small control devices such as PLC.
- Easy to mount and easy to dismount.

# 2. Further Reduction of Vibration

## Adaptive filter (Note1)

- Makes the notch filter frequency automatically follow the machine resonance frequency in real-time auto-gain tuning.
- Suppression of “Judder” noise of the machine, which is caused by variation of the machines or resonance frequency due to aging, can be expected.

## Notch filter (Note1)

- 1-channel notch filter is equipped in the driver independent from adaptive filter.
- Each of 2 filters can set up frequency and notch width, and frequency in 1Hz unit. Suppression of "Judder" noise of the machine which has multiple resonance points can be expected.

Effect of notch filter

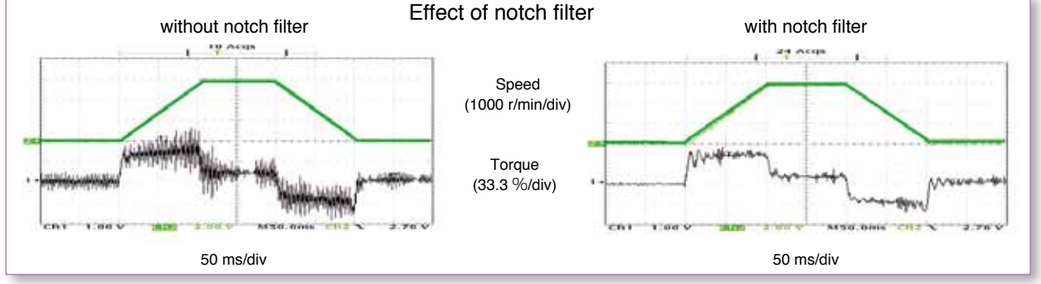


## Damping control (Note1)

- You can suppress vibration occurring at both starting and stopping in low stiffness machine, by manually setting up vibration frequency in 0.1 Hz unit. Note) Only applies to manual adjustment

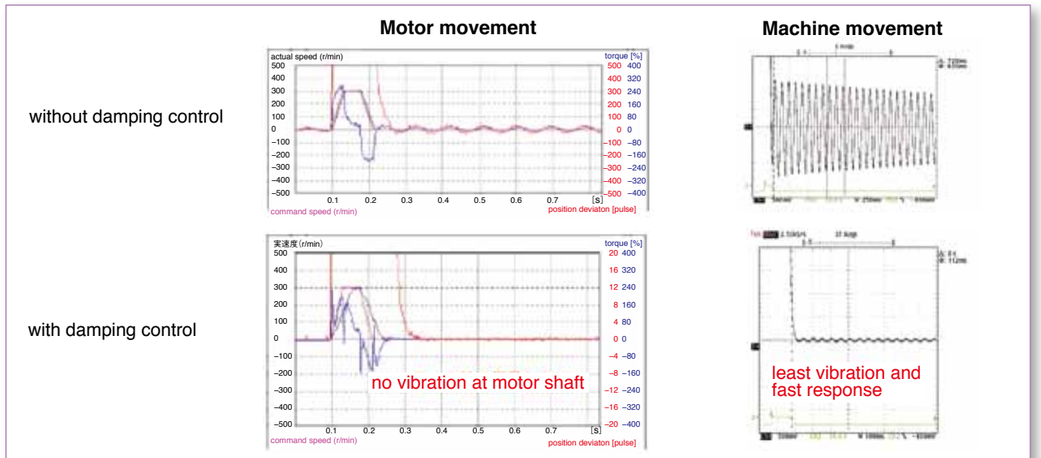


(Note1) Select at positioning action mode.
- At high speed positioning mode (Pr02=0) Select either one of notch filter, damping control or high-functionality real-time auto- gain tuning. Not possible to use them all at the same time. Adaptive filter cannot be used.
- At high-functionality positioning mode (Pr02=1) All of notch filter, damping control, high-functionality real-time auto-gain tuning and adaptive filter can be used at the same time.



# 3. Further Flexibility and Multiplicity

## Console (Option)

- You can set up parameters, copy and make a JOG run.
- Convenient for maintenance at site.
- Refer to P.241, Options.

## Command control modes

- Offers 2 command modes, “Position control” and “Internal velocity control”.
- You can make a 4-speed running at preset values with parameter at internal velocity control mode.

## Inrush current suppressing function

- Inrush suppressing resistor, which prevent the circuit breaker shutdown of the power supply caused by inrush current at power-on, is equipped in this driver.
- Prevents unintentional shutdown of the power supply circuit breaker in multi axis application and does not give load to the power line.

## Regeneration discharging function

- Discharges the regenerative energy with external resistor, where energy is generated while stopping the load with large moment of inertia, or use in up-down operation, and is returned to the driver from the motor.
- No regenerative resistor is installed in the driver.
- It is highly recommended to install an external regenerative resistor (option).

## Built-in dynamic brake

- You can select the dynamic brake action which short the servo motor windings of U, V and W, at Servo-OFF, CW/CCW over- travel inhibition, power shutdown and trip.
- You can select the action sequence depending on the machine requirement.

## Setup support software (Option)

- With the setup support software, “PANATERM” via RS232 / RS485 communication port, you can monitor the running status of the driver and set up parameters.

  Note) Refer to P.236 for setup support software.

## Key-way shaft and tapped shaft end

- Easy pulley attachment and easy maintenance
- Attache screw to the tapped shaft to prevent key or pulley from being pulled out.

## Wave-form graphic function

- With the setup support software, “PANATERM”, you can monitor the “Command speed”, “Actual speed”, “Torque”, “Position deviation” and “Positioning complete signal”.
- Helps you to analyze the machine and shorten the setup time.

  Note) Refer to P.236 for setup support software.

## Frequency analyzing function

- You can confirm the response frequency characteristics of total machine mechanism including the servo motor with the setup support software, “PANATERM”.
- Helps you to analyze the machine and shorten the setup time.

  Note) Refer to P.236 for setup support software.

## Torque limit switching function

- You can select 2 preset torque limit value from external input.
- Use this function for tension control or press-hold control.

## Conformity to CE and UL Standards

| Subject | Standard conformed | | |
|---|---|---|---|
| Motor | IEC60034-1 | IEC60034-5 UL1004 CSA22.2 No.100 | Conforms to Low-Voltage Directives |
| Motor and driver | EN50178 | UL508C CSA22.2 No.14 | |
| | EN55011 | Radio Disturbance Characteristics of Industrial, Scientific and Medical (ISM) Radio-Frequency Equipment | Conforms to references by EMC Directives |
| | EN61000-6-2 | Immunity for Industrial Environments | |
| | EC61000-4-2 | Electrostatic Discharge Immunity Test | |
| | IEC61000-4-3 | Radio Frequency Electromagnetic Field Immunity Test | |
| | IEC61000-4-4 | Electric High-Speed Transition Phenomenon/Burst Immunity Test | |
| | IEC61000-4-5 | Lightening Surge Immunity Test | |
| | IEC61000-4-6 | High Frequency Conduction Immunity Test | |
| | IEC61000-4-11 | Instantaneous Outage Immunity Test | |

IEC : International Electrotechnical Commission
EN : Europaischen Normen
EMC : Electromagnetic Compatibility
UL : Underwriters Laboratories
CSA : Canadian Standards Association

Pursuant to at the directive 2004/108/EC,article 9(2)

Panasonic Testing Centre
Panasonic Service Europe,
a division of Panasonic Marketing Europe GmbH
Winsbergring 15,22525 Hamburg,F.R.Germany

* When exporting this product, follow statutory provisions of the destination country.

# Motor Line-up

| Motor series | | Rated output (kW) | Rated rotational speed (Max. speed) (r/min) | Rotary encoder | | Brake | Gear | UL/ CSA | Enclosure | Features | Applications |
|---|---|---|---|---|---|---|---|---|---|---|---|
| | | | | 2500 P/r incremental | 17bit absolute/ incremental | Holding | High precision | | | | |
| Ultra low inertia | MUMA | 0.05 to 0.4<br>0.05<br>0.1<br>0.2<br>0.4 | 3000<br>(5000) | ○ | – | ○ | ○ | ○ | IP65<br>Except shaft throughhole and connector | Small capacity<br>Ultra low inertia | SMT machines<br>Inserters<br>High repetitive positioning application |





# Model Designation

## Servo Motor

**M U M A 5 A Z P 1 S * ***

Special specifications

| Symbol | Type |
|---|---|
| MUMA | Ultra low inertia (50 W to 400 W) |

Motor rated output

| Symbol | Rated output |
|---|---|
| 5A | 50 W |
| 01 | 100 W |
| 02 | 200 W |
| 04 | 400 W |

Voltage specifications

| Symbol | Specifications |
|---|---|
| 1 | 100 V |
| 2 | 200 V |
| Z | 100 V/200 V common (50 W only) |

Rotary encoder specifications

| Symbol | Format | Pulse counts | Resolution | Wires |
|---|---|---|---|---|
| P | Incremental | 2500 P/r | 10000 | 5 |

Design order

| Symbol | Specifications |
|---|---|
| 1 | Standard |

Motor structure

| Symbol | Shaft | Holding brake | | Oil seal | |
|---|---|---|---|---|---|
| | Key-way, center tap | without | with | without | with* |
| S | ● | ● | | ● | |
| T | ● | | ● | ● | |

* Motor with oil seal is manufactured by order.

See P.227 for motor specifications

## Motor with gear reducer

**M U M A 0 1 1 P 3 1 N**

| Symbol | Type |
|---|---|
| MUMA | Ultra low inertia (100 W to 400 W) |

Motor rated output

| Symbol | Rated output |
|---|---|
| 01 | 100 W |
| 02 | 200 W |
| 04 | 400 W |

Voltage specifications

| Symbol | Specifications |
|---|---|
| 1 | 100 V |
| 2 | 200 V |

Rotary encoder specifications

| Symbol | Format | Pulse counts | Resolution | Wires |
|---|---|---|---|---|
| P | Incremental | 2500 P/r | 10000 | 5 |

Gear reduction ration, gear type

| Symbol | Gear reduction ratio | Motor output (W) | | | Gear type |
|---|---|---|---|---|---|
| | | 100 | 200 | 400 | |
| 1N | 1/5 | ● | ● | ● | For high accuracy |
| 2N | 1/9 | ● | ● | ● | |
| 4N | 1/25 | ● | ● | ● | |

Motor structure

| Symbol | Shaft | Holding brake | |
|---|---|---|---|
| | Key-way | without | with |
| 3 | ● | ● | |
| 4 | ● | | ● |

See P.232 for motor with gear reducer specifications

## Servo Driver

**M K D E T 1 3 1 0 P * ***

Special specifications

Control mode

| Symbol | Specifications |
|---|---|
| P | Pulse train |

Current detector current rating

| Symbol | Current rating |
|---|---|
| 05 | 5 A |
| 10 | 10 A |

Frame symbol

| Symbol | Frame |
|---|---|
| MKDE | E series, K-frame |
| MLDE | E series, L-frame |

Power device Max. current rating

| Symbol | Current rating |
|---|---|
| T1 | 10 A |
| T2 | 15 A |

Supply voltage specifications

| Symbol | Specifications |
|---|---|
| 1 | Single phase, 100 V |
| 2 | Single phase, 200 V |
| 3 | 3-phase, 200 V |
| 5 | Single/3-phase, 200 V |

See P.223 for driver specifications

# Overall Wiring/ Driver and List of Applicable Peripheral Equipments

## • Wiring of main circuit

**Circuit Breaker (MCCB)**
Protects the power lines.
Shuts off the circuit when overcurrent passes.

**Noise Filter (NF)**
Prevents external noise from the power lines. And reduces an effect of the noise generated by the servo driver.

**Magnetic Contactor (MC)**
Turns on/off the main power of the servo driver.
Surge absorber to be used together with this.

**Reactor (L)**
Reduces harmonic current of the main power.

**Pin-5 and Pin-3 of CN POWER**
• Connect an external regenerative resistor (option) between P(pin-5) and B(pin-3) of connector, CN X1, when regenerative energy is large. (Refer to P.242 for regenerative resistor.)

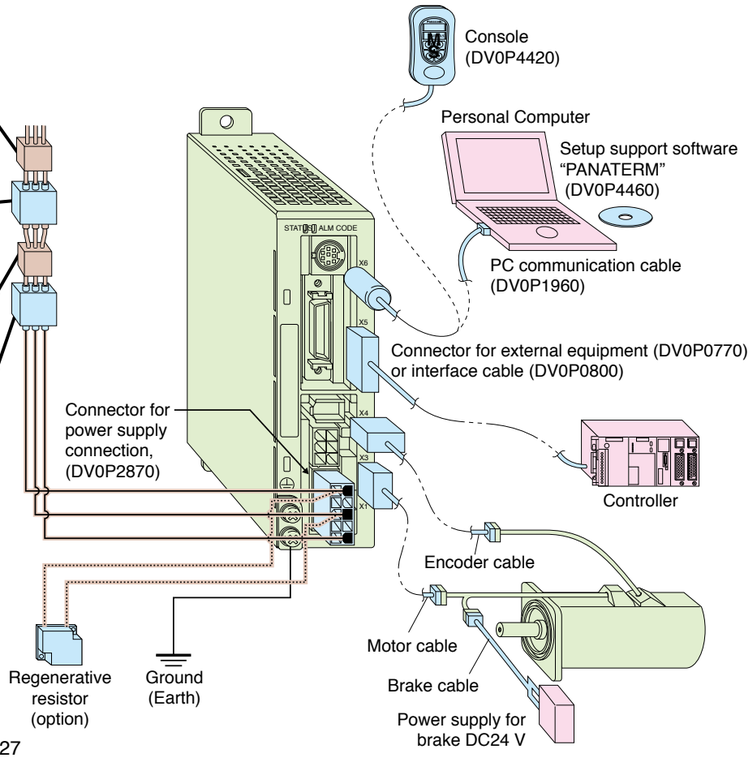


| | |
|---|---|
| Motor | to P.227 |
| Driver | to P.223 |
| Option | to P.236 |
| Recommended equipments | |
| Parts customer to prepare | |

## List of recommended peripheral equipments

| Power supply | Motor Series | Motor Output | Power capacity (at rated output) | Circuit Breaker (Rated current) | Noise Filter | Magnetic Contactor Contact Composition | Wire diameter (L1, L2, L3, U, V and W) |
|---|---|---|---|---|---|---|---|
| Single phase, 100 V | MUMA | 50 W | 0.3 kVA | (5 A) | DV0P4160 | 10 A (3P+1a) | 0.75 mm² to 0.85 mm² AWG18 |
| | | 100 W | 0.4 kVA | | | | |
| | | 200 W | 0.5 kVA | (10 A) | | | |
| Single phase, 200 V | | 50 W | 0.3 kVA | (5 A) | | 15 A (3P+1a) | |
| | | 100 W | | | | | |
| | | 200 W | 0.5 kVA | | | | |
| | | 400 W | 0.9 kVA | (10 A) | | | |
| 3-phase 200 V | | 50 W | 0.3 kVA | (5 A) | | 10 A (3P+1a) | |
| | | 100 W | | | | | |
| | | 200 W | 0.5 kVA | | | | |
| | | 400 W | 0.9 kVA | (10 A) | | | |

∗ Select the single and 3-phase common specifications corresponding to the power supplies.
● To conform to EC Directives, install a circuit breaker which conforms to IEC and UL Standards (Listed, UL marked) between noise filter and power supply.
● For details of the noise filters, refer to P.256.

**<Remarks>**
• Use a copper conductor cables with temperature rating of 60 ˚C or higher for main power connector and ground terminal wiring.
Use a cable for ground with diameter of 2.0 mm² (AWG14) or larger.

## Carrying page

| Options | | Part No. | Carrying page |
|---|---|---|---|
| Console | | DV0P4420 | 241 |
| Setup Support Software, PANATERM | Japanese | DV0P4460 | 236 |
| | English | | |
| RS232 Communication Cable (for Connection with PC) | | DV0P1960 | 241 |
| Interface Cable | | DV0P0800 | 241 |
| Connector Kit for External Equipment | | DV0P0770 | 240 |
| Connector Kit for Motor and Encoder | | DV0P3670 | 239 |
| Connector Kit for Driver Power Supply | | DV0P2870 | 239 |
| Encoder Cable | MFECA0 ∗∗ 0EAM | | 238 |
| Motor Cable | MFMCA0 ∗∗ 0AEB | | 238 |
| Brake Cable | MFMCB0 ∗∗ 0GET | | 238 |
| Cable Set (3 m) (Note 3) | DV0P37300 | | 238 |
| Cable Set (5 m) (Note 3) | DV0P39200 | | 238 |
| DIN Rail Mount Unit | DV0P3811 | | 242 |
| External Regenerative Resistor | 100 V | 50 Ω 10 W DV0P2890 | 242 |
| | 200 V | 100 Ω 10 W DV0P2891 | |
| Reactor | 100 V | DV0P227 | 243 |
| | | DV0P228 | |
| | 200 V | DV0P220 | |
| Noise Filter | | DV0P4160 | 256 |
| Surge Absorber | Single phase 100 V, 200 V | DV0P4190 | 256 |
| | 3-phase 200 V | DV0P1450 | |
| Noise Filter for Signal Wire | | DV0P1460 | 256 |

(Note 3) Cable set (3 m) contains,
1) Interface cable: DV0P0800
2) Encoder cable (3 m) : MFECA0030EAM
3) Motor cable (3 m) : MFMCA0030AEB
4) Connector kit for driver power supply connection : DV0P2870
Cable set (5 m) contains,
1) Interface cable: DV0P0800
2) Encoder cable (5 m) : MFECA0050EAM
3) Motor cable (5 m) : MFMCA0050AEB
4) Connector kit for driver power supply connection : DV0P2870

## Table of Part Numbers and Options

| Power supply | Output (W) | 2500P/r, Incremental Motor (Note) 1 | Rating/Spec. (page) | Driver | Dimensions (Frame symbol) | Encoder Cable (Note) 2 | Motor Cable (Note) 2 | | Brake Cable (Note) 2 | External Regenerative Resistor | Reactor | Noise Filter |
|---|---|---|---|---|---|---|---|---|---|---|---|---|
| Single phase 100 V | 50 | MUMA5AZP1 □ | 227 | MKDET1105P | 226 (K) | MFECA0∗∗0EAM | MFMCA0∗∗0AEB | | MFMCB0∗∗0GET | DV0P2890 | DV0P227 | DV0P4160 |
| | 100 | MUMA011P1 □ | 227 | MKDET1110P | 226 (K) | | | | | | | |
| | 200 | MUMA021P1 □ | 227 | MLDET2110P | 226 (L) | | | | | | DV0P228 | |
| Single phase 200 V | 50 | MUMA5AZP1 □ | 229 | MKDET1505P | 226 (K) | | | | | DV0P2891 | DV0P220 | |
| | 100 | MUMA012P1 □ | 229 | MKDET1505P | 226 (K) | | | | | | | |
| | 200 | MUMA022P1 □ | 229 | MLDET2210P | 226 (L) | | | | | | | |
| | 400 | MUMA042P1 □ | 229 | MLDET2510P | 226 (L) | | | | | | | |
| 3-phase 200 V | 50 | MUMA5AZP1 □ | 229 | MKDET1505P | 226 (K) | | | | | | | |
| | 100 | MUMA012P1 □ | 229 | MKDET1505P | 226 (K) | | | | | | | |
| | 200 | MUMA022P1 □ | 229 | MKDET1310P | 226 (K) | | | | | | | |
| | 400 | MUMA042P1 □ | 229 | MLDET2510P | 226 (L) | | | | | | | |
| | | | | MLDET2310P | | | | | | | | |

Note) 1 Motor model number suffix: □
S : Key way with center tap, without brake
T : Kew way with center tap, with brake
Note) 2 ∗∗ represents cable length. For details, refer to P.237.

| | | | |
|---|---|---|---|
| Basic Specifications | Input power | Single phase, 100 V | Single phase, 100 V to 115 V +10 % −15 % 50 Hz/60 Hz |
| | | Single phase, 200 V | Single phase, 200 V to 240 V +10 % −15 % 50 Hz/60 Hz |
| | | 3-phase, 200 V | 3-phase, 200 V to 240 V +10 % −15 % 50 Hz/60 Hz |
| | Environment | Temperature | Operating : 0 ˚C to 55 ˚C, Storage : –20 ˚C to 65 ˚C<br>(Max.temperature guarantee 80 ˚C for 72 hours <Nomal temperature>) |
| | | Humidity | Both operating and storage : 90 %RH or less (free from condensation) |
| | | Altitude | 1000 m or lower |
| | | Vibration | 5.88 m/s² or less, 10 Hz to 60 Hz (No continuous use at resonance frequency) |
| | Withstand voltage | | Should be 1500 VAC (Sensed current: 20 mA) for 1 minute between Primary and Ground. |
| | Control method | | IGBT PWM Sinusoidal wave drive |
| | Encoder feedback | | 2500 P/r (10000 resolution) incremental encoder |
| | Control signal | Input | 7 inputs (1) Servo-ON, (2) Alarm clear and other inputs vary depending on the control mode. |
| | | Output | 4 outputs (1) Servo alarm, (2) Alarm,<br>(3) Release signal of external brake and other outputs vary depending on the control mode. |
| | Pulse signal | Input | 2 inputs Supports both line driver I/F and open collector I/F. |
| | | Output | 4 outputs Feed out the encoder pulse (A, B and Z-phase) in line driver.<br>Z-phase pulse is also feed out in open collector. |
| | Communication function | RS232 | 1 : 1 communication to a host with RS232 interface is enabled. |
| | Display LED | | (1) Status LED (STATUS), (2) Alarm code LED (ALM-CODE) |
| | Regeneration | | No built-in regenerative resistor (external resistor only) |
| | Dynamic brake | | Built-in |
| | Control mode | | 3 modes of (1) High-speed position control, (2) Internal velocity control and<br>(3) High-functionality positioning control are selectable with parameter. |
| Functions | Position control | Control input | (1) CW over-travel inhibition, (2) CCW over-travel inhibition, (3) Deviation counter clear,<br>(4) Gain switching, (5) Electronic gear switching |
| | | Control output | (1) Positioning complete (In-position) |
| | | Pulse input: Max. command pulse frequency | Line driver : 500 kpps, Open collector : 200 kpps |
| | | Pulse input: Type of input pulse train | Differential input. Selectable with parameter, ((1) CW/CCW, (2) A and B-phase, (3) Command and Direction) |
| | | Pulse input: Electronic gear (Division/Multiplication of command pulse) | Setup of electronic gear ratio Setup range of (1-10000) × $2^{(0-17)}$/(1-10000) |
| | | Pulse input: Smoothing filter | Primary delay filter or FIR type filter is selectable to the command input. |
| | Internal speed control | Control input | (1) CW over-travel inhibition, (2) CCW over-travel inhibition, (3) Selection 1 of internal command speed,<br>(4) Selection 2 of internal command speed, (5) Speed zero clamp |
| | | Control output | (1) Speed arrival (at-speed) |
| | | Internal speed command | Internal 4-speed is selectable with control input. |
| | | Soft-start/down function | Individual setup of acceleration and deceleration are enabled, with 0 s to 10 s/1000 r/min.<br>Sigmoid acceleration/deceleration is also enabled. |
| | | Zero-speed clamp | 0-clamp of internal speed command with speed zero clamp input is enabled. |
| | Common | Auto-gain tuning: Real-time | Estimates the load inertia in real-time in actual operation and sets up the gain automatically corresponding to the machine stiffness. Useable at (1) High-response position control, (2) Internal speed control and (3) High-functionality position control. |
| | | Auto-gain tuning: Normal mode | Estimates the load inertia with an action command inside of the driver, and sets up the gain automatically corresponding to setup of the machine stiffness. Useable at (1) High-response position control, (2) Internal speed control and (3) High-functionality position control. |
| | | Masking of unnecessary input | Masking of the following input signal is enabled.<br>(1) Over-travel inhibition, (2) Speed zero clamp, (3) Torque limit switching |
| | | Division of encoder feedback pulse | 1 P/r to 2500 P/r (encoder pulses count is the max.). |
| | | Protective function: Hardware error | Over-voltage, under-voltage, over-speed over-load, over-heat, over-current and encoder error etc. |
| | | Protective function: Software error | Excess position deviation, command pulse division error, EEPROM error etc. |
| | | Traceability of alarm data | Traceable up to past 14 alarms including the present one. |
| | | Damping control function | Manual setup with parameter |
| | | Setup: Manual | Console |
| | | Setup: Setup support software | PANATERM (Supporting OS : Windows98, Windows ME, Windows2000, and WindowsXP) |





# Standard Wiring Example of Main Circuit/ Encorder Wiring Diagram

## Standard Wiring Example of Main Circuit

### 3-Phase, 200 V

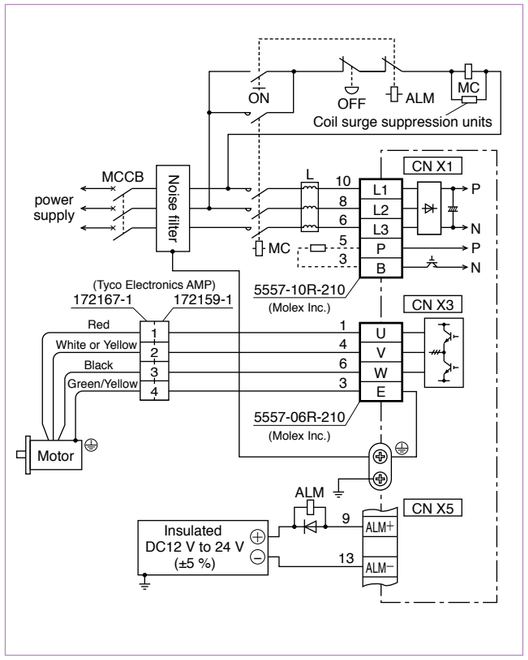


### Single Phase, 100 V / 200 V

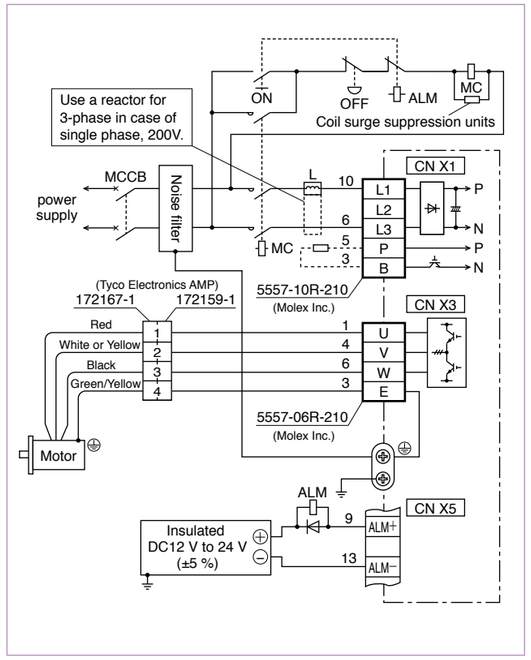


## Encorder Wiring Diagram

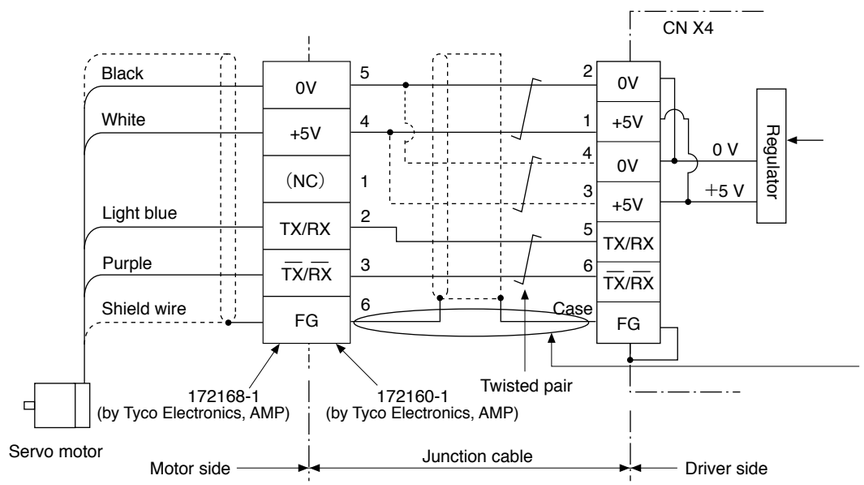


**When you make your own junction cable for encoder (Refer to P.239, P.240 "Options" for connector.)**

1) Refer the wiring diagram.
2) Use the twisted pair wire with shield, with core diameter of 0.18 mm² (AWG24) or larger, with higher bending resistance.
3) Use the twisted pair wire for the corresponding signal and power supply.
4) Shielding
   Connect the shield of the driver to the case of CN X4.
   Connect the shield of the motor to Pin-6.

# Control Circuit Standard Wiring Example

## CN X 5 Wiring Example at Position Control Mode

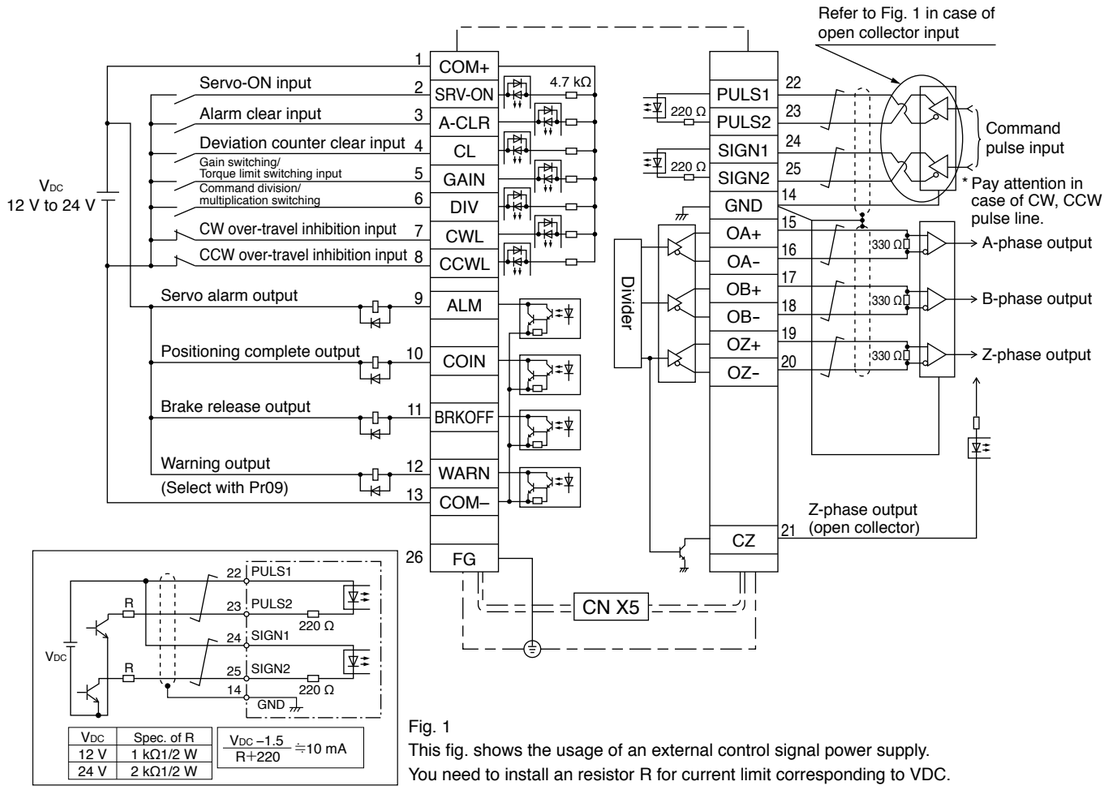





| VDC | Spec. of R |
|---|---|
| 12 V | 1 kΩ1/2 W |
| 24 V | 2 kΩ1/2 W |

$\frac{V_{DC} - 1.5}{R + 220} \fallingdotseq 10$ mA

Fig. 1
This fig. shows the usage of an external control signal power supply.
You need to install an resistor R for current limit corresponding to VDC.

## CN X 5 Wiring Example at Internal Velocity Control Mode

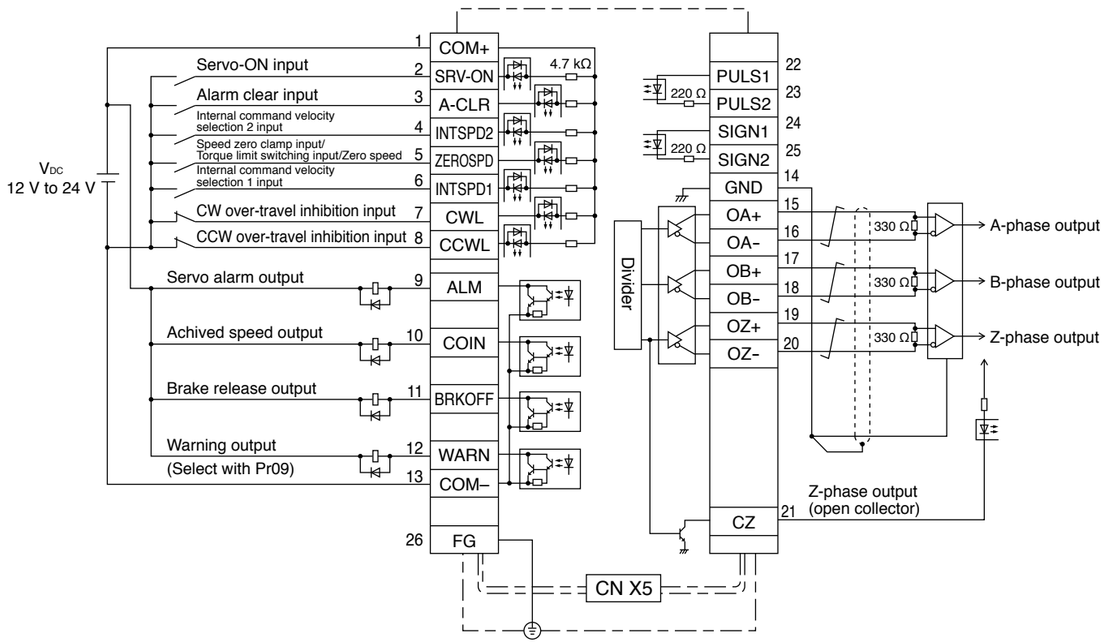






## Frame K

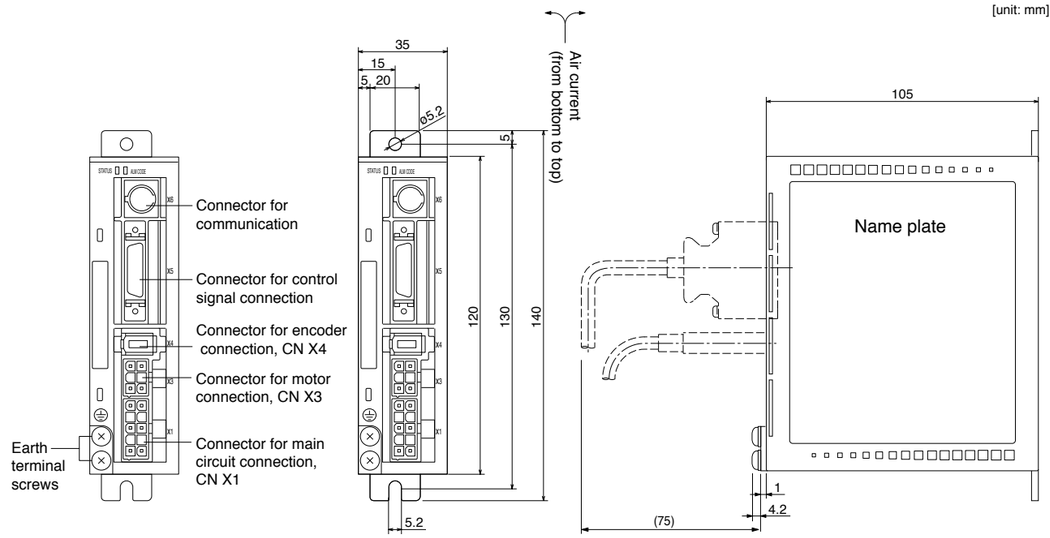


**Connector (Driver side)**

| Connector symbol | Connector type | Manufacturer |
|---|---|---|
| CNX1 | 5569-06A2 | Molex Inc. |
| CNX3 | 5569-10A2 | Molex Inc. |
| CNX4 | 53460-0621 | Molex Inc. |
| CNX5 | 10226-52A11L(or equivalent) | Sumitomo 3M |

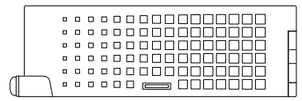

Mass: 0.35 kg

## Frame L

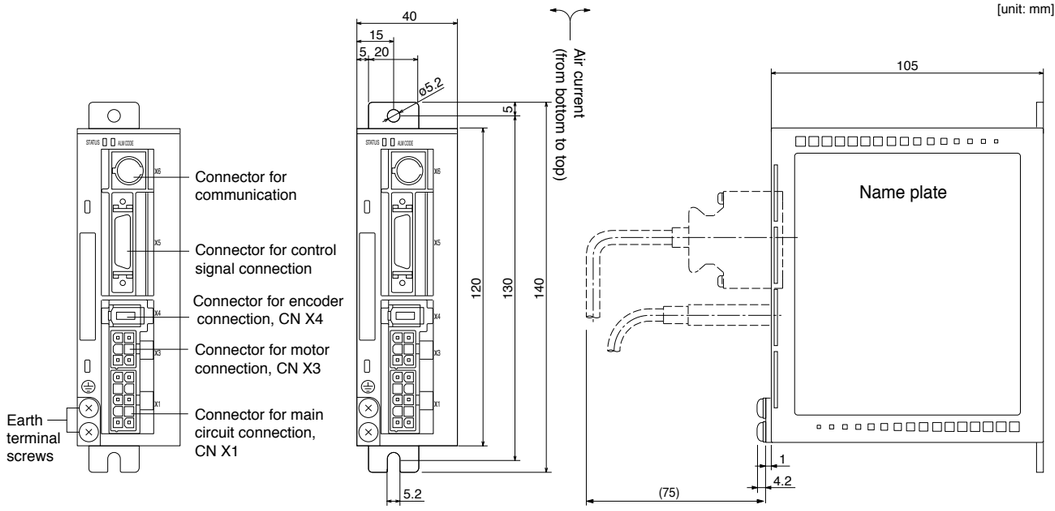


**Connector (Driver side)**

| Connector symbol | Connector type | Manufacturer |
|---|---|---|
| CNX1 | 5569-06A2 | Molex Inc. |
| CNX3 | 5569-10A2 | Molex Inc. |
| CNX4 | 53460-0621 | Molex Inc. |
| CNX5 | 10226-52A11L(or equivalent) | Sumitomo 3M |

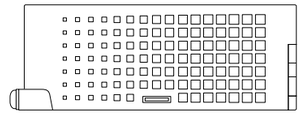

Mass: 0.40 kg

# 100 V MUMA 50 W to 200 W [Low inertia Small drives]

| | | AC100 V | | |
|---|---|---|---|---|
| Motor model | MUMA | 5AZP1□ | 011P1□ | 021P1□ |
| Applicable driver | Model No. | MKDET1105P | MKDET1110P | MLDET2110P |
| | Frame symbol | Frame K | | Frame L |
| Power supply capacity (kVA) | | 0.3 | 0.4 | 0.5 |
| Rated output (W) | | 50 | 100 | 200 |
| Rated torque (N·m) | | 0.16 | 0.32 | 0.64 |
| Momentary Max. peak torque (N·m) | | 0.48 | 0.95 | 1.91 |
| Rated current (Arms) | | 1.0 | 1.6 | 2.5 |
| Max. current (Ao-p) | | 4.3 | 6.9 | 11.7 |
| Regenerative brake frequency (times/min) Note)1 | Without option | No limit Note)2 | | |
| | DV0P2890 | No limit Note)2 | | |
| Rated rotational speed (r/min) | | 3000 | | |
| Max. rotational speed (r/min) | | 5000 | | |
| Moment of inertia of rotor ($\times 10^{-4}$ kg·m²) | Without brake | 0.021 | 0.032 | 0.10 |
| | With brake | 0.026 | 0.036 | 0.13 |
| Recommended moment of inertia ratio of the load and the rotor Note)3 | | 30 times or less | | |
| Rotary encoder specifications | | 2500 P/r Incremental | | |
| | Resolution per single turn | 10000 | | |
| Protective enclosure rating | | IP65 (except rotating portion of output shaft and lead wire end) | | |
| Environment | Ambient temperature | 0 ˚C to 40 ˚C (free from freezing), Storage : –20 ˚C to 65 ˚C (Max.temperature guarantee 80 ˚C for 72 hours <nomal humidity>) | | |
| | Ambient humidity | 85 %RH or lower (free from condensing) | | |
| | Installation location | Indoors (no direct sunlight), free from corrosive gas, inflammable gas, oil mist and dust | | |
| | Altitude | 1000 m or lower | | |
| | Vibration resistance | 49 m/s² or less | | |
| Mass (kg), ( ) represents holding brake type | | 0.4 (0.6) | 0.5 (0.7) | 0.96 (1.36) |

| Brake specifications (This brake will be released when it is energized. Do not use this for braking the motor in motion.) | | |
|---|---|---|
| Static friction torque (N·m) | 0.29 | 1.27 |
| Engaging time (ms) | 25 | 50 |
| Releasing time (ms) Note)4 | 20 (30) | 15 (100) |
| Exciting current (DC) (A) | 0.26 | 0.36 |
| Releasing voltage | DC 1 V or more | |
| Exciting voltage | DV 24 V ±10 % | |

| Permissible load | | | |
|---|---|---|---|
| During assembly | Radial load P-direction (N) | 147 | 392 |
| | Thrust load A-direction (N) | 88 | 147 |
| | Thrust load B-direction (N) | 117 | 196 |
| During operation | Radial load P-direction (N) | 68 | 245 |
| | Thrust load A-direction (N) | 58 | 98 |
| | Thrust load B-direction (N) | 58 | 98 |

For motor dimensions, refer to P.231, and for the diver, refer to P.226.



## Model Designation

e.g.) M U M A 5 A Z P 1 S

| Symbol | Type |
|---|---|
| MUMA | Ultra low inertia (50 W to 200 W) |

Motor rated output

| Symbol | Rated output |
|---|---|
| 5A | 50 W |
| 01 | 100 W |
| 02 | 200 W |

Voltage specifications

| Symbol | Specifications |
|---|---|
| 1 | 100 V |
| Z | 100/200 V (50 W only) |

Design order
1 : Standard

Motor structure

| Symbol | Shaft | Holding brake | | Oil seal | |
|---|---|---|---|---|---|
| | Key-way, center tap | without | with | without | with |
| S | ● | ● | | ● | |
| T | ● | | ● | ● | |

Rotary encoder specifications

| Symbol | Format | Pulse counts | Resolution | Wires |
|---|---|---|---|---|
| P | Incremental | 2500 P/r | 10000 | 5 |

## Torque Characteristics [at AC100 V of power voltage (Dotted line represents the torque at 10 % less supply voltage.)]

### MUMA5AZP1□

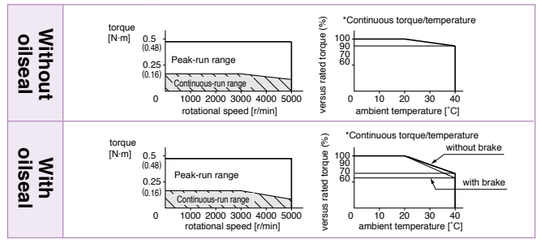


### MUMA011P1□

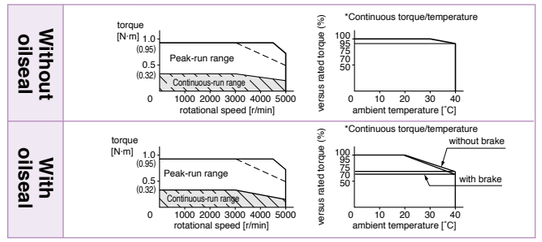


### MUMA021P1□

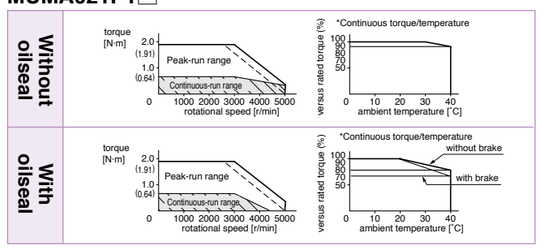


*When you lower the torque limit setup (Pr5E and 5F), running range at high speed might be lowered as well.

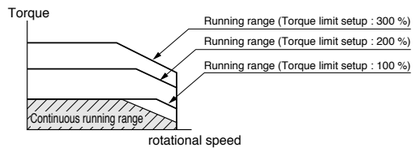


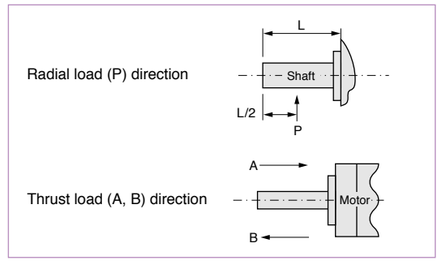


Note) 1. Regenerative brake frequency represents the frequency of the motor's stops from the rated speed with deceleration without load.
- If the load is connected, frequency will be defined as 1/(m+1), where m = (load moment of inertia) / (rotor moment of inertia).
- When the motor speed exceeds the rated speed, regenerative brake frequency is in inverse proportion to the square of (running speed/rated speed).
- Power supply voltage is AC115 V (at 100 V of the main voltage). If the supply voltage fluctuates, frequency is in inverse proportion to the square of (Running supply voltage/115) relative to the value in the table.
- When regeneration occurs continuously such cases as running speed frequently changes or vertical feeding, consult us or a dealer.

2. If the effective torque is within the rated torque, there is no limit in regenerative brake.
3. Consult us or a dealer if the load moment of inertia exceeds the specified value.
4. Specified releasing time is obtained with the use of surge absorber for brake (Z15D151 by SEMITEC Corporation or equivalent). ( ) represents the actually measured value using a diode (200 V, 1 A or equivalent)

# 200 V MUMA 50 W to 400 W [Low inertia Small drives]

| | | AC200 V | | | |
|---|---|---|---|---|---|
| Motor model | MUMA | 5AZP1□ | 012P1□ | 022P1□ | 042P1□ |
| Applicable driver | Model No. | MKDET1505P | | MKDET1310P | MLDET2310P |
| | | | | MKDET2210P | MLDET2510P |
| | Frame symbol | Frame K | | Frame K | Frame L |
| | | | | Frame L | |
| Power supply capacity (kVA) | | 0.3 | 0.3 | 0.5 | 0.9 |
| Rated output (W) | | 50 | 100 | 200 | 400 |
| Rated torque (N · m) | | 0.16 | 0.32 | 0.64 | 1.3 |
| Momentary Max. peak torque (N · m) | | 0.48 | 0.95 | 1.91 | 3.8 |
| Rated current (Arms) | | 1.0 | 1.0 | 1.6 | 2.5 |
| Max. current (Ao-p) | | 4.3 | 4.3 | 7.5 | 11.7 |
| Regenerative brake frequency (times/min) Note)1 | Without option | No limit Note)2 | | | |
| | DV0P2891 | No limit Note)2 | | | |
| Rated rotational speed (r/min) | | 3000 | | | |
| Max. rotational speed (r/min) | | 5000 | | | |
| Moment of inertia of rotor ($\times 10^{-4}$ kg·m²) | Without brake | 0.021 | 0.032 | 0.10 | 0.17 |
| | With brake | 0.026 | 0.036 | 0.13 | 0.20 |
| Recommended moment of inertia ratio of the load and the rotor Note)3 | | 30 times or less | | | |
| Rotary encoder specifications | | 2500 P/r Incremental | | | |
| | Resolution per single turn | 10000 | | | |
| Protective enclosure rating | | IP65 (except rotating portion of output shaft and lead wire end) | | | |
| Environment | Ambient temperature | 0 ˚C to 40 ˚C (free from freezing), Storage : –20 ˚C to 65 ˚C (Max.temperature guarantee 80 ˚C for 72 hours <nomal humidity>) | | | |
| | Ambient humidity | 85 %RH or lower (free from condensing) | | | |
| | Installation location | Indoors (no direct sunlight), free from corrosive gas, inflammable gas, oil mist and dust | | | |
| | Altitude | 1000 m or lower | | | |
| | Vibration resistance | 49 m/s² or less | | | |
| Mass (kg), ( ) represents holding brake type | | 0.4 (0.6) | 0.5 (0.7) | 0.96 (1.36) | 1.5 (1.9) |

| Brake specifications (This brake will be released when it is energized. Do not use this for braking the motor in motion.) | | |
|---|---|---|
| Static friction torque (N · m) | 0.29 | 1.27 |
| Engaging time (ms) | 25 | 50 |
| Releasing time (ms) Note)4 | 20 (30) | 15 (100) |
| Exciting current (DC) (A) | 0.26 | 0.36 |
| Releasing voltage | DC 1 V or more | |
| Exciting voltage | DV 24 V ±10 % | |

| Permissible load | | | |
|---|---|---|---|
| During assembly | Radial load P-direction (N) | 147 | 392 |
| | Thrust load A-direction (N) | 88 | 147 |
| | Thrust load B-direction (N) | 117 | 196 |
| During operation | Radial load P-direction (N) | 68 | 245 |
| | Thrust load A-direction (N) | 58 | 98 |
| | Thrust load B-direction (N) | 58 | 98 |

For motor dimensions, refer to P.231, and for the driver, refer to P.226.

Note) Driver for 50 W and 100 W has a common power supply of single phase and 3-phase 200 V.
Driver for 200 W, the upper row is the power supply of 3-phase 200 V, and lower is the power supply of single-phase 200 V.
Driver for 400 W, the upper row is the power supply of 3-phase 200 V, and lower is the common power supply of single-phase and 3-phase 200 V.



## Model Designation

e.g.) M U M A 5 A Z P 1 S

| Symbol | Type |
|---|---|
| MUMA | Ultra low inertia (50 W to 400 W) |

Motor rated output

| Symbol | Rated output |
|---|---|
| 5A | 50 W |
| 01 | 100 W |
| 02 | 200 W |
| 04 | 400 W |

Voltage specifications

| Symbol | Specifications |
|---|---|
| 2 | 200 V |
| Z | 100/200 V (50 W only) |

Rotary encoder specifications

| Symbol | Format | Pulse counts | Resolution | Wires |
|---|---|---|---|---|
| P | Incremental | 2500 P/r | 10000 | 5 |

Design order
1 : Standard

Motor structure

| Symbol | Shaft | Holding brake | | Oil seal | |
|---|---|---|---|---|---|
| | Key-way, center tap | without | with | without | with |
| S | ● | ● | | ● | |
| T | ● | | ● | ● | |

## Torque Characteristics [at AC200 V of power voltage (Dotted line represents the torque at 10 % less supply voltage.)]

### MUMA5AZP1□

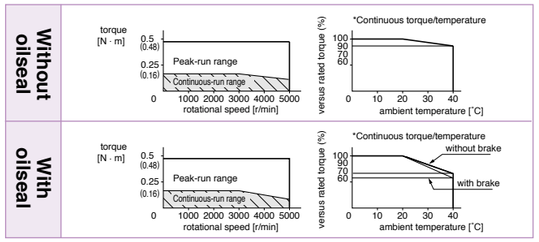


### MUMA012P1□

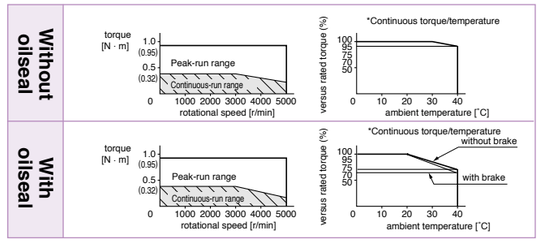


### MUMA022P1□

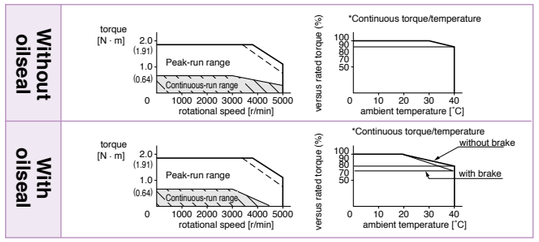


### MUMA042P1□

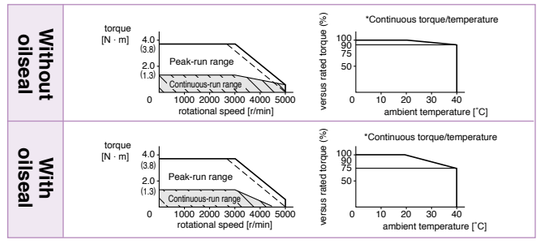


*When you lower the torque limit setup (Pr5E and 5F), running range at high speed might be lowered as well.

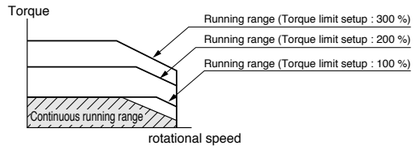


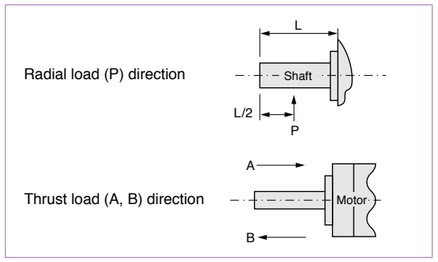


Note) 1. Regenerative brake frequency represents the frequency of the motor's stops from the rated speed with deceleration without load.
- If the load is connected, frequency will be defined as 1/(m+1), where m = (load moment of inertia) / (rotor moment of inertia).
- When the motor speed exceeds the rated speed, regenerative brake frequency is in inverse proportion to the square of (running speed/rated speed).
- Power supply voltage is AC240 V (at 200 V of the main voltage). If the supply voltage fluctuates, frequency is in inverse proportion to the square of (Running supply voltage/240) relative to the value in the table.
- When regeneration occurs continuosly such cases as running speed frequently changes or vertical feeding, consult us or a dealer.

2. If the effective torque is within the rated torque, there is no limit in regenerative brake.
3. Consult us or a dealer if the load moment of inertia exceeds the specified value.
4. Specified releasing time is obtained with the use of surge absorber for brake (Z15D151 by SEMITEC Corporation or equivalent). ( ) represents the actually measured value using a diode (200 V, 1 A or equivalent)

# MUMA 50 W to 400 W

[Unit: mm]

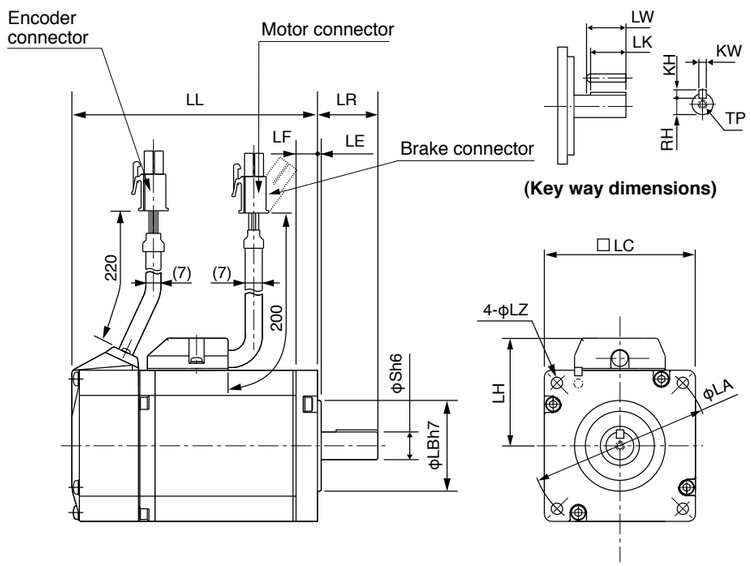


* Dimensions are subject to change without notice. Contact us or a dealer for the latest information

[Unit: mm]

| | | MUMA series (Ultra low inertia) | | | |
|---|---|---|---|---|---|
| Motor output | | 50 W | 100 W | 200 W | 400 W |
| Motor model | MUMA | 5A□P1□ | 01□P1□ | 02□P1□ | 04□P1□ |
| Rotary encoder specifications | | 2500 P/r Incremental | 2500 P/r Incremental | 2500 P/r Incremental | 2500 P/r Incremental |
| LL | Without brake | 75.5 | 92.5 | 96 | 123.5 |
| | With brake | 107 | 124 | 129 | 156.5 |
| LR | | 24 | 24 | 30 | 30 |
| S | | 8 | 8 | 11 | 14 |
| LA | | 48 | 48 | 70 | 70 |
| LB | | 22 | 22 | 50 | 50 |
| LC | | 42 | 42 | 60 | 60 |
| LE | | 2 | 2 | 3 | 3 |
| LF | | 7 | 7 | 7 | 7 |
| LH | | 34 | 34 | 43 | 43 |
| LZ | | 3.4 | 3.4 | 4.5 | 4.5 |
| Key way | LW | 14 | 14 | 20 | 25 |
| | LK | 12.5 | 12.5 | 18 | 22.5 |
| | KW | 3h9 | 3h9 | 4h9 | 5h9 |
| | KH | 3 | 3 | 4 | 5 |
| | RH | 6.2 | 6.2 | 8.5 | 11 |
| | TP | M3 × 6 (depth) | M3 × 6 (depth) | M4 × 8 (depth) | M5 × 10 (depth) |
| Mass (kg) | Without brake | 0.40 | 0.50 | 0.96 | 1.5 |
| | With brake | 0.60 | 0.70 | 1.36 | 1.9 |
| Connector/Plug specifications | | refer to Options, P.239, P.240. | | | |

**<Cautions>**
Reduce the moment of inertia ratio if high speed response operation is required.
Read the Instruction Manual carefully and understand all precautions and remarks before using the products.





# MINAS E Series
# Motors with Gear Reducer

## Motor Types with Gear Reducer

| Reduction ratio | Motor output (W) | | | Type of reducer |
|---|---|---|---|---|
| | 100 | 200 | 400 | |
| 1/ 5 | ● | ● | ● | For high precision |
| 1/ 9 | ● | ● | ● | |
| 1/25 | ● | ● | ● | |

Efficiency of the gear reducer shows the following inclination in relation to output torque and rotational speed.

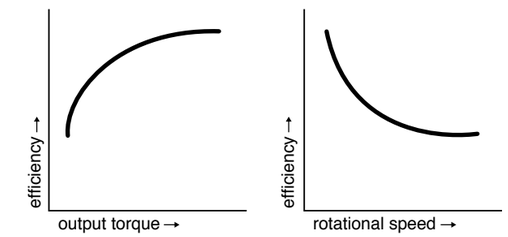


## Model No. Designation

e.g.) M U M A 0 1 1 P 3 1 N

| Symbol | Type |
|---|---|
| MUMA | Low inertia (100 to 400 W) |

Motor rated output

| Symbol | Rated output |
|---|---|
| 01 | 100 W |
| 02 | 200 W |
| 04 | 400 W |

Voltage specifications

| Symbol | Specifications |
|---|---|
| 1 | 100 V |
| 2 | 200 V |

Rotary encoder specifications

| Symbol | Format | Pulse counts | Pulse counts | Wire |
|---|---|---|---|---|
| P | Incremental | 2500 P/r | 10000 | 5 |

Motor types with gear reducer

| Symbol | Reduction ratio | Motor output | | | Type of reducer |
|---|---|---|---|---|---|
| | | 100 | 200 | 400 | |
| 1N | 1/ 5 | ● | ● | ● | For High precision |
| 2N | 1/ 9 | ● | ● | ● | |
| 4N | 1/25 | ● | ● | ● | |

Motor structure

| Symbol | Shaft | Holding brake | |
|---|---|---|---|
| | Key-way | without | with |
| 3 | ● | ● | |
| 4 | ● | | ● |

## Specifications of Motor with Gear Reducer

| Motor type | | MUMA |
|---|---|---|
| Gear reducer | Backlash | 3 minutes or smaller (initial value) at output shaft of the reducer |
| | Composition of gear | Planetary gear |
| | Gear efficiency | 65 % to 85 % |
| | Rotational direction at output shaft (of reducer) | Same direction as the motor output shaft |
| | Composition of gear | Planetary gear |
| | Mounting method | Flange mounting |
| | Permissible moment of inertia of the load (conversion to the motor shaft) | 10 times or smaller than rotor moment of inertia of the motor |
| | Protective structure | IP44 (at gear reducer) |
| Environment | Ambient temperature | 0 ˚C to 40 ˚C |
| | Ambient humidity | 85 %RH (free from condensation) or less |
| | Vibration resistance | 49 m/s² or less (at motor frame) |
| | Impact resistance | 98 m/s² or less |

# Table of Motor Specifications/ The Combination of the Driver and the Motor

## Table of Motor with Gear Reducer Specifications

| Model | Motor Output (W) | MUMA with gear reducer: Reduction ratio | Output (W) | Rated speed (r/min) | Max. speed (r/min) | Rated torque (N·m) | Peak max. torque (N·m) | Moment of inertia (motor + reducer/converted to motor shaft) J ( × $10^{-4}$kg·m²) w/o brake | w/ brake | Mass (kg) w/o brake | w/ brake | Permissible radial load (N) | Permissible thrust load (N) |
|---|---|---|---|---|---|---|---|---|---|---|---|---|---|
| MUMA01□P□1N | 100 | 1/5 | 75 | 600 | 1000 | 1.18 | 3.72 | 0.072 | 0.076 | 1.05 | 1.25 | 490 | 245 |
| MUMA01□P□2N | | 1/9 | 80 | 333 | 555 | 2.25 | 6.86 | 0.0663 | 0.0703 | 1.05 | 1.25 | 588 | 294 |
| MUMA01□P□4N | | 1/25 | 80 | 120 | 200 | 6.27 | 19.0 | 0.0645 | 0.0685 | 2.20 | 2.40 | 1670 | 833 |
| MUMA02□P□1N | 200 | 1/5 | 170 | 600 | 1000 | 2.65 | 8.04 | 0.218 | 0.248 | 1.68 | 2.08 | 490 | 245 |
| MUMA02□P□2N | | 1/9 | 132 | 333 | 555 | 3.72 | 11.3 | 0.368 | 0.398 | 2.66 | 3.06 | 1180 | 588 |
| MUMA02□P□4N | | 1/25 | 140 | 120 | 200 | 11.1 | 33.3 | 0.388 | 0.418 | 2.66 | 3.06 | 1670 | 833 |
| MUMA042P□1N | 400 | 1/5 | 340 | 600 | 1000 | 5.39 | 16.2 | 0.533 | 0.563 | 3.2 | 3.6 | 980 | 490 |
| MUMA042P□2N | | 1/9 | 332 | 333 | 555 | 9.51 | 28.5 | 0.438 | 0.468 | 3.2 | 3.6 | 1180 | 588 |
| MUMA042P□4N | | 1/25 | 332 | 120 | 200 | 26.4 | 79.2 | 0.470 | 0.500 | 4.7 | 5.1 | 2060 | 1030 |

For dimensions, refer to P.235.

## The Combination of the Driver and the Motor with Gear Reducer

| Combination with driver | | 100 V | | 200 V | | |
|---|---|---|---|---|---|---|
| Encoder | Motor output | Part No. of motor with gear reducer | Single phase, 100 V Part No. of driver | Part No. of motor with gear reducer | 3-phase, 200 V Part No. of driver | Single phase, 200 V Part No. of driver |
| 2500 P/r Incremental | 100 W | MUMA011P□□N | MKDET1110P | MUMA012P□□N | MKDET1505P | MKDET1505P |
| | 200 W | MUMA021P□□N | MLDET2110P | MUMA022P□□N | MKDET1310P | MLDET2210P |
| | 400 W | – | – | MUMA042P□□N | MLDET2510P<br>MLDET2310P | MLDET2510P |

For dimensions, refer to P.235.





# Torque Characteristics

## For High Precision (MUMA Series 100 W to 400 W)

| Supply voltage to driver | Motor output \ Reduction ratio | 1/5 | 1/9 | 1/25 |
|---|---|---|---|---|
| 100 V | 100 W | MUMA011P□1N 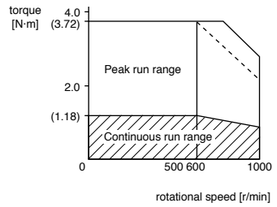 | MUMA011P□2N 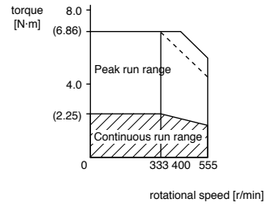 | MUMA011P□4N 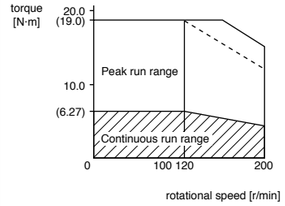 |
| | 200 W | MUMA021P□1N 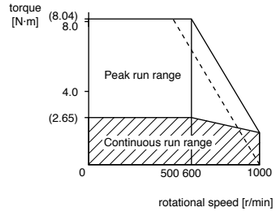 | MUMA021P□2N 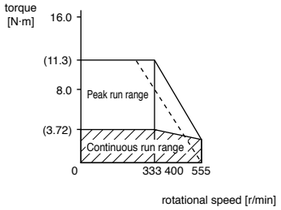 | MUMA021P□4N 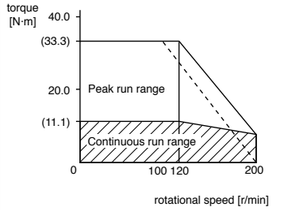 |
| 200 V | 100 W | MUMA012P□1N 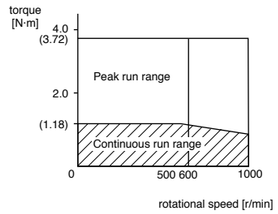 | MUMA012P□2N 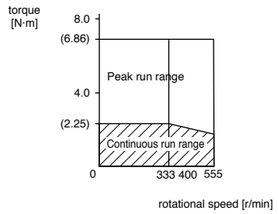 | MUMA012P□4N 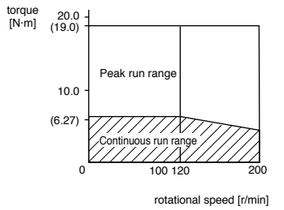 |
| | 200 W | MUMA022P□1N 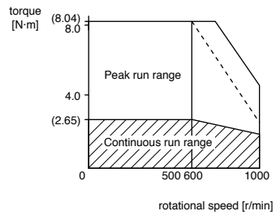 | MUMA022P□2N 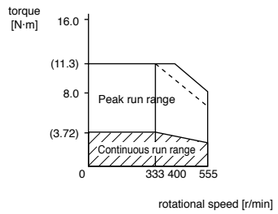 | MUMA022P□4N 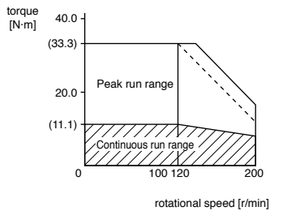 |
| | 400 W | MUMA042P□1N 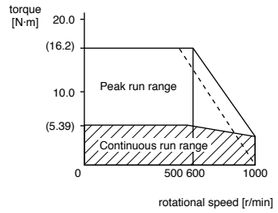 | MUMA042P□2N 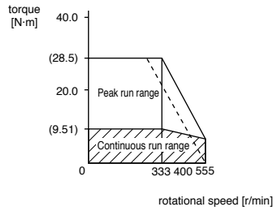 | MUMA042P□4N 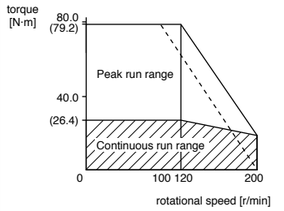 |

Dotted line represents the torque at 10 % less supply voltage.

# Motor Dimensions

## MUMA series with Gear Reducer

[Unit: mm]

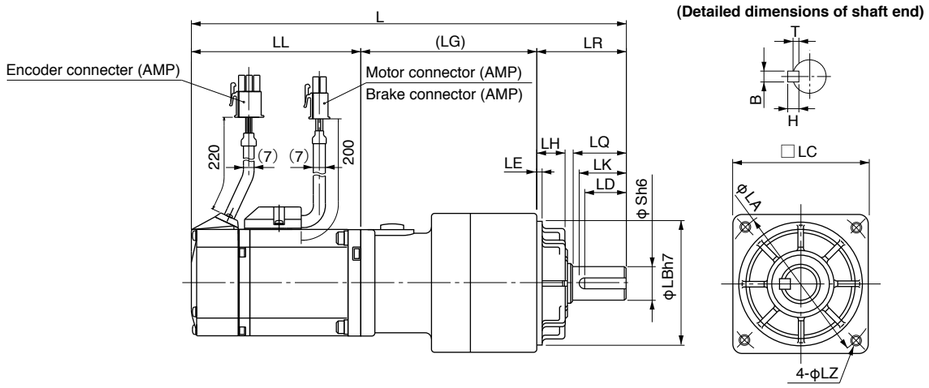


## 2500 P/r Encoder

[Unit: mm]

| Model | Motor output | Reduction ratio | L | LL | LR | LQ | LC | LB | LA | S | LH | LZ | LK | (LG) | LE | Key way B×H×LD | T |
|---|---|---|---|---|---|---|---|---|---|---|---|---|---|---|---|---|---|
| MUMA01□P□1N | 100 W | 1 / 5 | 192 | 92.5 | 32 | 20 | 52 | 50 | 60 | 12 | 10 | M5 (Depth: 12) | 18 | 67.5 | 3 | 4×4×16 | 2.5 |
| | | | 223.5 | 124 | | | | | | | | | | | | | |
| MUMA01□P□2N | | 1 / 9 | 192 | 92.5 | | | | | | | | | | | | | |
| | | | 223.5 | 124 | | | | | | | | | | | | | |
| MUMA01□P□4N | | 1/25 | 234.5 | 92.5 | 50 | 30 | 78 | 70 | 90 | 19 | 17 | M6 (Depth: 20) | 26 | 92 | | 6×6×22 | 3.5 |
| | | | 266 | 124 | | | | | | | | | | | | | |
| MUMA02□P□1N | 200 W | 1 / 5 | 200.5 | 96 | 32 | 20 | 52 | 50 | 60 | 12 | 10 | M5 (Depth: 12) | 18 | 72.5 | | 4×4×16 | 2.5 |
| | | | 233.5 | 129 | | | | | | | | | | | | | |
| MUMA02□P□2N | | 1 / 9 | 235.5 | 96 | 50 | 30 | 78 | 70 | 90 | 19 | 17 | M6 (Depth: 20) | 26 | 89.5 | | 6×6×22 | 3.5 |
| | | | 268.5 | 129 | | | | | | | | | | | | | |
| MUMA02□P□4N | | 1/25 | 246 | 96 | | | | | | | | | | 100 | | | |
| | | | 279 | 129 | | | | | | | | | | | | | |
| MUMA042P□1N | 400 W | 1 / 5 | 263 | 123.5 | | | | | | | | | | 89.5 | | | |
| | | | 296 | 156.5 | | | | | | | | | | | | | |
| MUMA042P□2N | | 1 / 9 | 263 | 123.5 | | | | | | | | | | | | | |
| | | | 296 | 156.5 | | | | | | | | | | | | | |
| MUMA042P□4N | | 1/25 | 288.5 | 123.5 | 61 | 40 | 98 | 90 | 115 | 24 | 18 | M8 (Depth: 20) | 35 | 104 | 5 | 8×7×30 | 4 |
| | | | 321.5 | 156.5 | | | | | | | | | | | | | |

Upper column : without brake
Lower column : with brake





# Setup Support Software

## Setup Support Software "PANATERM" for MINAS series AC Servo Motor & Driver

| Part No. | DV0P4460 (Japanese/English version) |
|---|---|

The PANATERM assists users in setting parameters, monitoring control conditions, setup support, and analyzing mechanical operation data on the PC screen, when installed in a commercially available personal computer, and connected to the MINAS A4 series, E series through the RS232 serial interface.

If your PC does not have RS232 port, use RS232-USB converter.

### Basic Function

**● Parameter setup**
- After a parameter is defined on the screen, it will be sent to the driver immediately.
- Once you register parameters you frequently use, they can be easily set up on the screen.

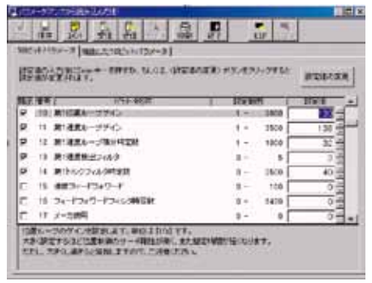

Parameter

### Monitoring Control Conditions

**● Monitor**
- Control conditions: Control mode, velocity, torque, error and warning
- Driver input signal
- Load conditions: Total count of command/feedback pulses, Load ratio, Regenerative resistor load ratio

**● Alarm**
- Displays the numbers and contents of the current alarm and up to 14 error events in the past.
- Clears the numbers and contents of the current alarm and up to 14 error events in the past.

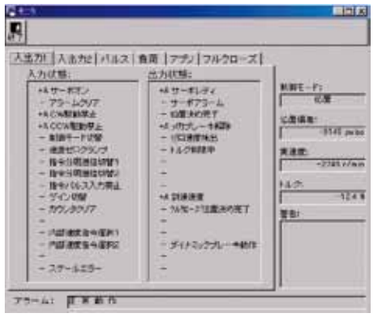

Monitor

### Setup

**● Auto tuning**
- Gain adjustment and inertia ratio measurement

**● Graphic waveform display**
- The graphic display shows command velocity, actual velocity, torque, and error waveforms.

**● Absolute encoder setup**
- Clears absolute encoder at the origin.
- Displays single revolution/multi-revolution data.
- Displays absolute encoder status.

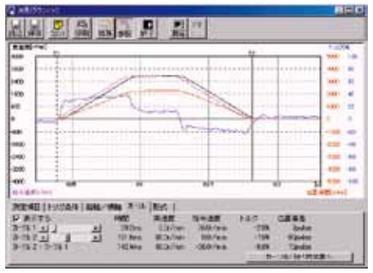

Graphic waveform display

### Analysis of Mechanical Operation Data

**● Frequency analysis**
- Measures frequency characteristics of the machine, and displays Bode diagram.

**■ Can not use with A5 family.**

**Hardware configuration**
**[Personal computer]** ・CPU : Pentium 100MHz or more ・Memory : 16 MB or more (32 MB recommended)
・Hard disk capacity (vacancy of 25 MB or more recommended) ・OS : Windows® 98, Windows® Me, Windows® 2000, Windows® XP (US version)
・Communication speed of serial communication port : 2400 bps or more (The software may not operate normally using USB-to-Serial adapter.)
**[Display]** ・Resolution : 640*480 (VGA) or more (desirably 1024*768) ・Number of colors : 256 colors or more
**[CD-ROM drive]** ・CD-ROM drive operable on the above-mentioned personal computer

# Cable part No. Designation

## Encoder Cable

| 1 | 2 | 3 | 4 | 5 | 6 | 7 | 8 | 9 | 10 | 11 | 12 |
|---|---|---|---|---|---|---|---|---|---|---|---|
| M | F | E | C | A | 0 | 0 | 5 | 0 | E | A | M |

Cable end (Driver side)

| | |
|---|---|
| M | Connector (MUMA) |

Cable end (Encoder side)

| | |
|---|---|
| A | Tyco Electronics, AMP connector |

Cable type

| | |
|---|---|
| E | PVC cable with shield by Oki Electric Cable Co., 0.20 mm² × 3P |

Cable length

| | |
|---|---|
| 0030 | 3 m |
| 0050 | 5 m |
| 0100 | 10 m |
| 0200 | 20 m |

Type classification

| | |
|---|---|
| MFECA: Encoder cable | |

## Motor Cable, Brake Cable

| 1 | 2 | 3 | 4 | 5 | 6 | 7 | 8 | 9 | 10 | 11 | 12 |
|---|---|---|---|---|---|---|---|---|---|---|---|
| M | F | M | C | A | 0 | 0 | 5 | 0 | A | E | B |

Cable end at driver side

| | |
|---|---|
| B | Molex Inc. |
| T | Clamp terminal |

Cable end at motor side

| | |
|---|---|
| E | Tyco Electronics, AMP connector |

Cable type

| | |
|---|---|
| A | ROBO-TOP® 4-wire (DYDEN CORPORATION) |
| G | ROBO-TOP® 2-wire (DYDEN CORPORATION) |

Cross section of cable core

| | |
|---|---|
| 0 | 0.75 mm² |
| 1 | 1.25 mm² |
| 2 | 2.0 mm² |
| 3 | 3.5 mm² |

Type classification

| | |
|---|---|
| A | Standard |
| B | Special |
| ⋮ | Design Oder |

Cable length

| | |
|---|---|
| 003 | 3 m |
| 005 | 5 m |
| 010 | 10 m |
| 020 | 20 m |

| |
|---|
| AC servo motor cable |

ROBO-TOP® is a trade mark of DYDEN CORPORATION





# Cable

## Cable Set (3 m)

| Part No. | DV0P37300 |
|---|---|

1) Interface cable : DV0P0800
2) Encoder cable (3 m) : MFECA0030EAM
3) Motor cable (3 m) : MFMCA0030AEB
4) Connector kit for driver power supply connection : DV0P2870

## Cable Set (5 m)

| Part No. | DV0P39200 |
|---|---|

1) Interface cable : DV0P0800
2) Encoder cable (5 m) : MFECA0050EAM
3) Motor cable (5 m) : MFMCA0050AEB
4) Connector kit for driver power supply connection : DV0P2870

## Encoder Cable

| Part No. | MFECA0 ∗ ∗ 0EAM |
|---|---|

[Unit: mm]

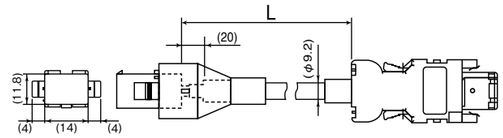


| Title | Part No. | Manufacturer |
|---|---|---|
| Connector (Driver side) | 3E206-0100KV | Sumitomo 3M or equivalent |
| Shell kit | 3E306-3200-008 | |
| Connector | 172160-1 | Tyco Electronics |
| Connector Pin | 170365-1 | |
| Cable | 0.20 mm² × 3P | Oki Electric Cable Co., Ltd. |

| L (m) | Part No. |
|---|---|
| 3 | MFECA0030EAM |
| 5 | MFECA0050EAM |
| 10 | MFECA0100EAM |
| 20 | MFECA0200EAM |

## Motor Cable (ROBO-TOP® 105 °C 600 V . DP)

ROBO-TOP® is a trade mark of DYDEN CORPORATION

| Part No. | MFMCA0 ∗ ∗ 0AEB |
|---|---|

[Unit: mm]

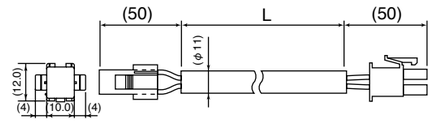


| Title | Part No. | Manufacturer |
|---|---|---|
| Connector | 172159-1 | Tyco Electronics |
| Connector Pin | 170362-1, 170366-1 | |
| Connector | 5557-06R-210 | Molex Inc |
| Connector Pin | 5556T | |
| Cable | ROBO-TOP 600 V 0.75 mm² | Daiden Co.,Ltd. |

| L (m) | Part No. |
|---|---|
| 3 | MFMCA0030AEB |
| 5 | MFMCA0050AEB |
| 10 | MFMCA0100AEB |
| 20 | MFMCA0200AEB |

## Brake Cable (ROBO-TOP® 105 °C 600V . DP)

ROBO-TOP® is a trade mark of DYDEN CORPORATION

| Part No. | MFMCB0 ∗ ∗ 0GET |
|---|---|

[Unit: mm]

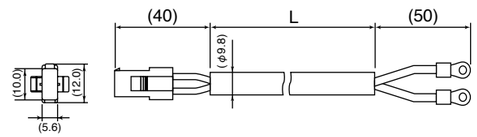


| Title | Part No. | Manufacturer |
|---|---|---|
| Connector | 172157-1 | Tyco Electronics |
| Connector Pin | 170362-1, 170366-1 | |
| Nylon insulated round terminal | N1.25-M4 | J.S.T Mfg. Co., Ltd. |
| Cable | ROBO-TOP 600 V 0.75 mm² | Daiden Co.,Ltd. |

| L (m) | Part No. |
|---|---|
| 3 | MFMCB0030GET |
| 5 | MFMCB0050GET |
| 10 | MFMCB0100GET |
| 20 | MFMCB0200GET |

## Connector Kit for Power Supply Connection

| Part No. | DV0P2870 |
|---|---|

● Parts composition

| Title | Part No. | Number | Manufacturer | Note |
|---|---|---|---|---|
| Connector (10 pins) | 5557-10R-210 | 1 | Molex Inc. | For connector, CN X1 (10 pins) |
| Connector pin | 5556PBTL | 6 | | |

● Pin configuration of connector CN X1

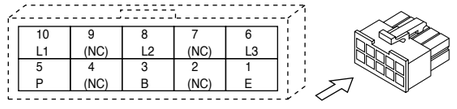


● Recommended manual crimping tool (to be prepared by customer)

| Part No. | Cable material |
|---|---|
| 57026-5000 | UL1007 |
| 57027-5000 | UL1015 |

**<Cautions>**

1. The above pin disposition is shown when viewed from the terminal inserting direction. Make a correct wiring by checking the stamped pin numbers on the connector itself.
2. Refer to P.224 for wiring and connection.
3. Do not connect anything to pins marked "NC".

## Connector Kit for Motor/Encoder Connection

| Part No. | DV0P3670 (Incremental 2500 pulse, 5-wire) |
|---|---|

This option is required when you make your own encoder cable and motor cable. (Brake cable is required for brake.)

● Parts composition

| Title | Part No. | Number | Manufacturer | Note |
|---|---|---|---|---|
| Connector (Driver side) | 3E206-0100 KV | 1 | Sumitomo 3M or equivalent | For connector, CN X4 (6 pins) |
| Shell kit | 3E306-3200-008 | 1 | | |
| Connector (6 pins) | 172160-1 | 1 | Tyco Electronics | For junction to encoder cable (6 pins) |
| Connector pin | 170365-1 | 6 | | |
| Connector (4 pins) | 172159-1 | 1 | Tyco Electronics | For junction to motor power cable (4 pins) |
| Connector pin | 170366-1 | 4 | | |
| Connector (6 pins) | 5557-06R-210 | 1 | Molex Inc. | For connector, CN X3 (6 pins) |
| Connector pin | 5556PBTL | 4 | | |

**<Remarks>**

We may use parts equivalent to the above for shell and connector cover.

● Pin configuration of connector CN X4 plug

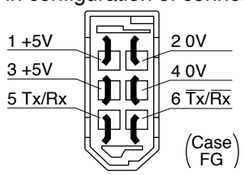


● Recommended manual crimping tool (to be prepared by customer)

| Title | Part No. | Manufacturer | Cable material |
|---|---|---|---|
| For encoder cable junction | 755330-1 | Tyco Electronics | — |
| For motor power cable junction | 755331-1 | | |
| For Connector CN X3 | 57026-5000 | Molex Inc. | UL1007 |
| | 57027-5000 | | UL1015 |

**<Remarks>**

1. The above pin configuration is shown when viewed from the pin-soldering direction. Make a correct wiring by checking the stamped pin numbers on the connector itself.
2. Connect the shield of the wire to the case (FG) without fail.
3. For wiring and connection, refer to P.224.



● Pin configuration of encoder cable junction

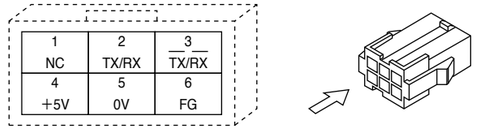


● Pin configuration of motor power cable junction

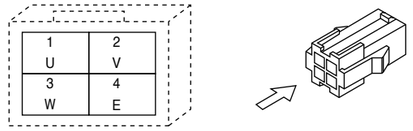


● Pin configuration of mating connector to CN X3 connector

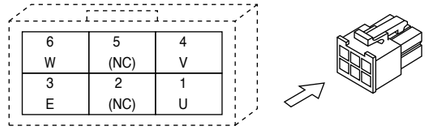


**<Cautions>**

1. The above pin configuration is shown when viewed from the terminal inserting direction. Make a correct wiring by checking the stamped pin numbers on the connector itself.
2. Refer to P.224 for wiring and connection.

## Connector Kit for External Peripheral Equipment

| Part No. | DV0P0770 |
|---|---|

● Parts composition

| Title | Part No. | Number | Manufacturer | Note |
|---|---|---|---|---|
| Connector | 10126-3000PE | 1 | Sumitomo 3M or equivalent | For connector, CN X5 (26 pins) |
| Connector cover | 10326-52A0-008 | 1 | | |

● Pin configuration of connector CN X5 (26 pins) (viewed from the soldering side)

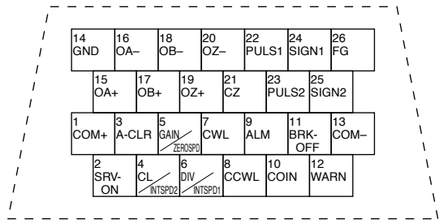


**<Cautions>**

1. Make a correct wiring by checking the stamped pin numbers on the connector itself.
2. Refer to P.225 for symbols and functions of the above signals.

# Interface Cable/ Communication Cable/ Console

## Interface Cable

| Part No. | DV0P0800 | Cable of 2 m is connected. |
|---|---|---|

● **Dimensions**

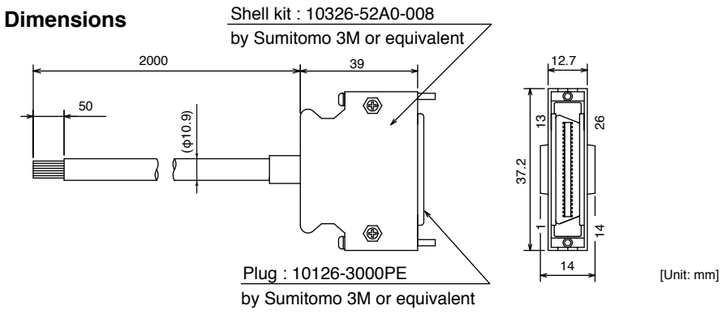


● **Wiring table**

| Pin No. | Title of signal | Color or cable | Pin No. | Title of signal | Color or cable | Pin No. | Title of signal | Color or cable |
|---|---|---|---|---|---|---|---|---|
| 1 | COM+ | Orange (Red 1) | 10 | COIN | Pink (Black 1) | 19 | OZ+ | Pink (Red 2) |
| 2 | SRV-ON | Orange (Black 1) | 11 | BRK-OFF | Orange (Red 2) | 20 | OZ- | Pink (Black 2) |
| 3 | A-CLR | Gray (Red 1) | 12 | WARN | Orange (Black 2) | 21 | CZ | Orange (Red 3) |
| 4 | CL/INTSPD2 | Gray (Black 1) | 13 | COM- | Gray (Red 2) | 22 | PULS1 | Gray (Red 3) |
| 5 | GAIN/ZEROSPD | White (Red 1) | 14 | GND | Gray (Black 2) | 23 | PULS2 | Gray (Black 3) |
| 6 | DIV/INTSPD1 | White (Black 1) | 15 | OA+ | White (Red 2) | 24 | SIGN1 | White (Red 3) |
| 7 | CWL | Yellow (Red 1) | 16 | OA- | White (Black 2) | 25 | SIGN2 | White (Black 3) |
| 8 | CCWL | Yellow (Black 1) | 17 | OB+ | Yellow (Red 2) | 26 | FG | Orange (Black 3) |
| 9 | ALM | Pink (Red 1) | 18 | OB- | Yellow (Black 2) | | | |

**<Notes>**

e. g. of Pin No. designation : Pin No. 1 ..... Wire color is orange, and one red dot.
Pin No. 12 ... Wire color is orange, and two black dot.

**<Remarks>**

The shield of this cable is not connected to a connector pin. To connect the shield to FG or GND at the driver side, use a connector kit for external device connection.

## Communication Cable (For Connection with PC)

| Part No. | DV0P1960 |
|---|---|

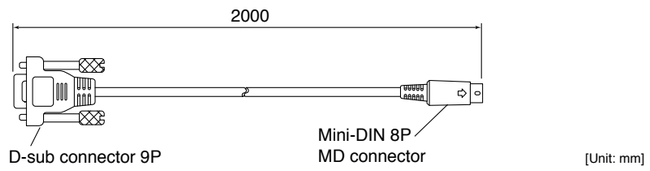


## Console

| Part No. | DV0P4420 |
|---|---|

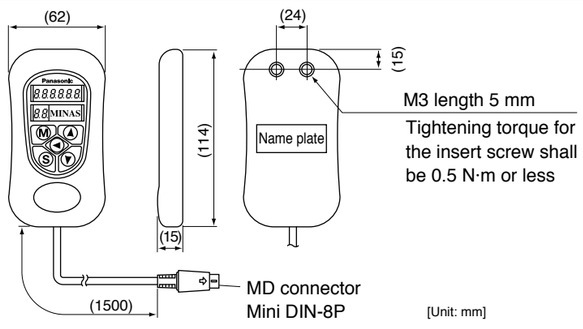






# DIN Rail Mounting Unit/ External Regenerative Resistor

## DIN Rail Mounting Unit

| Part No. | DV0P3811 |
|---|---|

● **Dimensions**

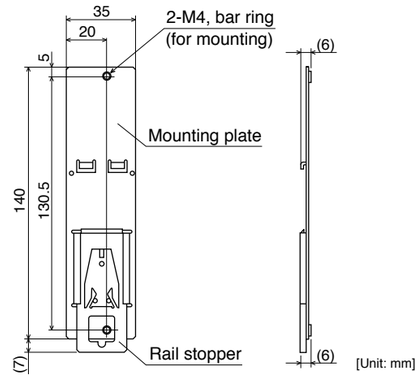


**<Notes>**

2 mounting screws (M4 X L8, Pan head) are attached.
Rail stopper can be extended to max. 10 mm.

**<Cautions>**

Please read carefully operation manual before using this product.
In addition, please do not apply excessive stress to the product.

• Driver mounted to DIN rail

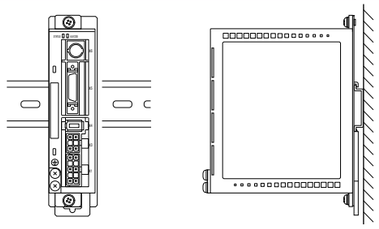

• **How to Install**

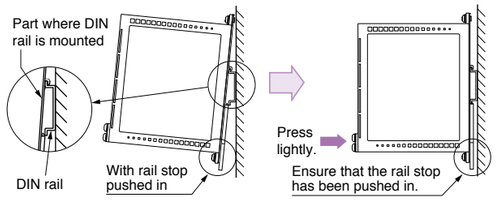


Hook the upper side of DIN rail mounting part on the DIN rail.

Press lightly the lower part of the main body of driver.

• **Removing from DIN Rail**

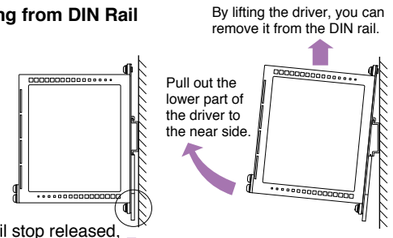


With the rail stop released, pull out the lower part of the driver to the near side.

## External Regenerative Resistor

| Part No. | Manufacturer's Part No. | Specifications | | | Note (Input Power of drive) |
|---|---|---|---|---|---|
| | | Resistance | Rated power | Activation temperature of built-in fuse | |
| | | Ω | W | °C | |
| DV0P2890 | 45M03 | 50 | 10 | $137^{+3}_{-2}$ | Single phase, 100 V |
| DV0P2891 | 45M03 | 100 | 10 | $137^{+3}_{-2}$ | Single/3-phase, 200 V |

Manufactured by Iwaki Musen Kenkyuusho Co., Ltd.

● **Dimensions**

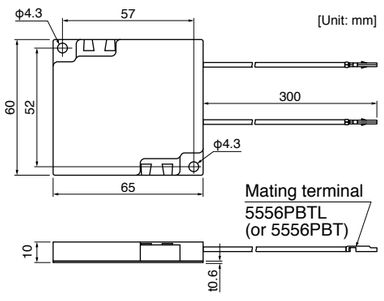


**<Caution of when using external regeneration resistor>**

**Since it becomes high temperature, external regeneration resistor must be installed according to the contents shown below.**

- **Attach to incombustibles, such as metal.**
- **Install in the place which cannot touch directly by covering with incombustibles etc.**
- **Do not install near the combustibles.**

**Although the thermal cutoff is built in external regeneration resistor, the skin temperature of regeneration resistor may become high exceeding the operating temperature of thermal cutoff by the time the thermal cutoff operates in amplifier failure.**
**The thermal cutoff is for preventing ignition of the regeneration resistor in amplifier failure, and is not for controlling the skin temperature of resistor.**

**<Remarks>**

**Thermal fuse is installed for safety.**
**The thermal fuse may blow due to heat dissipating condition, working temperature, supply voltage or load fluctuation. Make it sure that the surface temperature of the resistor may not exceed 100 °C at the worst running conditions with the machine, which brings large regeneration (such case as high supply voltage, load inertia is large or deceleration time is short) Please carry out air cooling if needed.**

# Reactor/ Surge Absorber for Motor Brake

## Reactor

| Frame symbol of driver | Power supply specifications | Rated output | Part No. | Fig. |
|---|---|---|---|---|
| MKDE | Single phase, 100 V | 50 W to 100 W | DV0P227 | 1 |
| | Single phase, 200 V | 50 W to 100 W | DV0P220 | 2 |
| | 3-phase, 200 V | 50 W to 200 W | | |
| MLDE | Single phase, 100 V | 200 W | DV0P228 | 1 |
| | Single phase, 200 V | 200 W to 400 W | DV0P220 | 2 |
| | 3-phase, 200 V | 400 W | | |

Fig.1

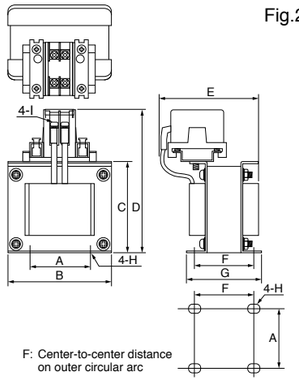


Fig.2

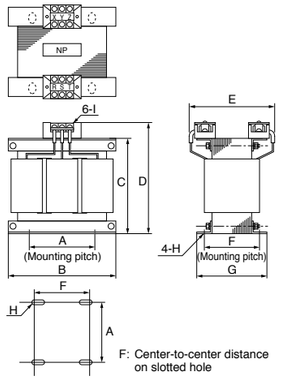


[Unit: mm]

| | Part No. | A | B | C | D | E (Max) | F | G | H | I | Inductance (mH) | Rated current (A) |
|---|---|---|---|---|---|---|---|---|---|---|---|---|
| Fig.1 | **DV0P227** | 55±0.7 | 80±1 | 66.5±1 | 110 Max | 90 | 41±2 | 55±2 | 4-5ϕ×10 | M4 | 4.02 | 5 |
| | **DV0P228** | 55±0.7 | 80±1 | 66.5±1 | 110 Max | 95 | 46±2 | 60±2 | 4-5ϕ×10 | M4 | 2 | 8 |
| Fig.2 | **DV0P220** | 65±1 | 125±1 | (93) | 136 Max | 155 | 70+3/–0 | 85±2 | 4-7ϕ×12 | M4 | 6.81 | 3 |

### Harmonic restraint on general-purpose inverter and servo driver

On September, 1994, Guidelines for harmonic restraint on heavy consumers who receive power through high voltage system or extra high voltage system and Guidelines for harmonic restraint on household electrical appliances and general-purpose articles established by the Agency for Natural Resources and Energy of the Ministry of Economy, Trade and Industry (the ex-Ministry of International Trade and Industry). According to those guidelines, the Japan Electrical Manufacturers Association (JEMA) have prepared technical documents (procedure to execute harmonic restraint: JEM-TR 198, JEM-TR 199 and JEM-TR 201) and have been requesting the users to understand the restraint and to cooperate with us. On January, 2004, it has been decided to exclude the general-purpose inverter and servo driver from the Guidelines for harmonic restraint on household electrical appliances and general-purpose articles". After that, the Guidelines for harmonic restraint on household electrical appliances and general-purpose articles was abolished on September 6, 2004.
We inform you that the procedure to execute the harmonic restraint on general-purpose inverter and servo driver will be modified as follows.

1. All types of the general-purpose inverters and servo drivers used by specific users are under the control of the Guidelines for harmonic restraint on heavy consumers who receive power through high voltage system or extra high voltage system". The users who are required to apply the guidelines must calculate the equivalent capacity and harmonic current according to the guidelines and must take appropriate countermeasures if the harmonic current exceeds a limit value specified in a contract demand. (Refer to JEM-TR 210 and JEM-TR 225.)
2. The Guidelines for harmonic restraint on household electrical appliances and general-purpose articles was abolished on September 6, 2004. However, based on conventional guidelines, JEMA applies the technical documents JEM-TR 226 and JEM-TR 227 to any users who do not fit into the Guidelines for harmonic restraint on heavy consumers who receive power through high voltage system or extra high voltage system from a perspective on enlightenment on general harmonic restraint. The purpose of these guidelines is the execution of harmonic restraint at every device by a user as usual to the utmost extent.

**<Remarks>**
When using a reactor, be sure to install one reactor to one servo driver.

■ **Recommended components**

## Surge Absorber for Motor Brake

| Motor | Surge absorber for motor brake | |
|---|---|---|
| | Part No. (Manufacturer's) | Manufacturer |
| MUMA 50 W to 400 W | Z15D151 | SEMITEC Corporation |





# List of Peripheral Components

## List of Peripheral Components

| Manufacturer | Tel No. / Home Page | Peripheral components |
|---|---|---|
| Panasonic Corporation<br>Eco Solutions Company | http://panasonic.net/es/ | Circuit breaker |
| Panasonic Corporation<br>Automotive & Industrial Systems Company | http://panasonic.net/id/ | Surge absorber<br>Switch, Relay |
| Iwaki Musen Kenkyusho Co., Ltd. | +81-44-833-4311<br>http://www.iwakimusen.co.jp/ | Regenerative resistor |
| SEMITEC Corporation | +81-3-3621-2703<br>http://www.semitec.co.jp/english2/ | Surge absorber for motor brake |
| TDK Corporation | +81-3-5201-7229<br>http://www.global.tdk.com/ | Noise filter for signal lines |
| Okaya Electric Industries Co. Ltd. | +81-3-4544-7040<br>http://www.okayaelec.co.jp/english/index.html | Surge absorber<br>Noise filter |
| Sumitomo 3M | +81-3-5716-7290<br>http:/solutions.3m.com/wps/portal/3M/ja_JP/WW2/Country/ | Connector |
| Tyco Electronics | +81-44-844-8052<br>http://www.te.com/ja/home.html | |
| Japan Molex Inc. | +81-462-65-2313<br>http://www.molex.co.jp | |
| DYDEN CORPORATION | +81-3-5805-5880<br>http://www.dyden.co.jp/english/index.htm | Cable |

* The above list is for reference only. We may change the manufacturer without notice.

MEMO

# Information



## Contents

**A5 Family.....247**
EC Directives / Conformity to UL Standards / KC .....247
Composition of Peripheral Equipments .....249
**E Series .....255**
Compliance to EC and EMC Directives .....255
Composition of Peripheral Components .....255
Conformity to UL Standards.....256
**Motor capacity selection software.....257**
AC Servo Motor Capacity Selection Software .....257
Option Selection Software for AC Servo Motor.....257
**Guide to the International System of Units (SI).....258**
**Selecting Motor Capacity.....260**
**Request Sheet for Motor Selection.....266**
**Connection Between Driver and Controller.....274**
Connection Between A5 Family Driver and Controller.....274
Replacing Old Model Servo Driver with MINAS A5Ⅱ and A5 Series .....279
Connection Between E Series Driver and Controller. .....283
Index.....288
Sales Office .....306

# EC Directives/Conformity to UL Standards/KC

## EC Directives

The EC Directives apply to all such electronic products as those having specific functions and have been exported to EU and directly sold to general consumers. Those products are required to conform to the EU unified standards and to furnish the CE marking on the products.
However, our AC servos meet the relevant EC Directives for Low Voltage Equipment so that the machine or equipment comprising our AC servos can meet EC Directives.

## EMC Directives

MINAS Servo System conforms to relevant standard under EMC Directives setting up certain model (condition) with certain locating distance and wiring of the servo motor and the driver. And actual working condition often differs from this model condition especially in wiring and grounding. Therefore, in order for the machine to conform to the EMC Directives, especially for noise emission and noise terminal voltage, it is necessary to examine the machine incorporating our servos.

## Conformity to UL Standards

Observe the following conditions of (1) and (2) to make the system conform to UL508C (E164620).

(1) Use the driver in an environment of Pollution Degree 2 or 1 prescribed in IEC60664-1.
(e.g. Install in the control box with IP54 enclosure.)

(2) Make sure to install a circuit breaker or fuse which are UL recognized (Listed Ⓤ marked) between the power supply and the noise filter.
For rated current of circuit breaker and fuse, refer to P.19 “Driver and List of Applicable Peripheral Equipments”.
Use a copper cable with temperature rating of 75 ˚C or higher.

(3) Over-load protection level
Over-load protective function will be activated when the effective current exceeds 115 % or more than the rated current based on the time characteristics (see the graph). Confirm that the effective current of the driver does not exceed the rated current.
Set up the peak permissible current with Pr0.13 (Setup of 1st torque limit) and Pr5.22 (Setup 2nd torque limit).

**Overload protection time characteristics**

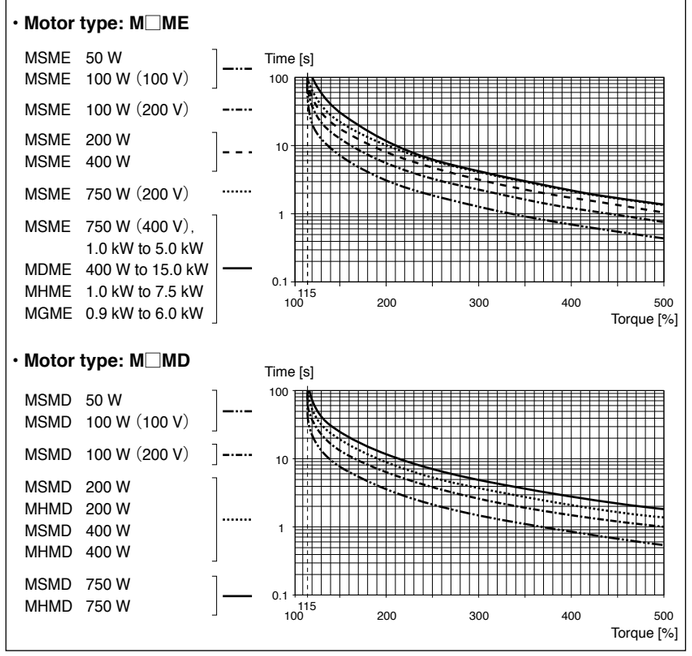




## Conformed Standards

| | | Driver | Motor |
|---|---|---|---|
| EC Directives | EMC Directives | EN55011<br>EN61000-6-2<br>EN61800-3 | – |
| | Low-Voltage Directives | EN61800-5-1 | EN60034-1<br>EN60034-5 |
| | Machinery Directives<br>Functional safety *1 | ISO13849-1(PL d)(Cat.3)<br>EN61508(SIL2)<br>EN62061(SILCL 2)<br>EN61800-5-2(STO)<br>IEC61326-3-1 | – |
| UL Standards | | UL508C (E164620) | UL1004-1, UL1004-6<br>(E327868) |
| CSA Standards | | C22.2 No.14 | C22.2 No.100 |
| Radio Waves Act (South Korea) (KC) *2 | | KN11<br>KN61000-4-2, 3, 4, 5, 6, 8, 11 | – |

IEC : International Electrotechnical Commission
EN : Europaischen Normen
EMC : Electromagnetic Compatibility
UL : Underwriters Laboratories
CSA : Canadian Standards Association

Pursuant to the directive 2004/108/EC, article 9(2)
Panasonic Testing Centre
Panasonic Service Europe, a division of
Panasonic Marketing Europe GmbH
Winsbergring 15, 22525 Hamburg, F.R. Germany

● When export this product, follow statutory provisions of the destination country.

*1 A5IIE and A5E series doesn't correspond to the functional safety standard.

*2 Information related to the Korea Radio Law
This servo driver is a Class A commercial broadcasting radio wave generator not designed for home use. The user and dealer should be aware of this fact.

A 급 기기 (업무용 방송통신기자재)
이 기기는 업무용(A 급) 전자파적합기기로서 판매자
또는 사용자는 이 점을 주의하시기 바라며, 가정외의
지역에서 사용하는 것을 목적으로 합니다.

( 대상기종 : Servo Driver )

# Composition of Peripheral Equipments

## Installation Environment

Use the servo driver in the environment of Pollution Degree 1 or 2 prescribed in IEC-60664-1 (e.g. Install the driver in control panel with IP54 protection structure.)

**<100 V/200 V>**

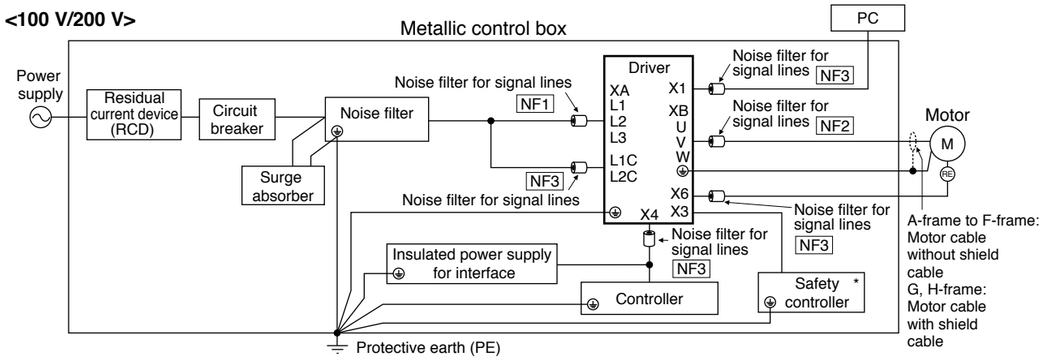


For NF1 to NF3, refer to the Table "Noise Filter for Signal Line" (P.254).
* A5ⅡE, A5E is not provided with X3 terminal.

**<400 V>**

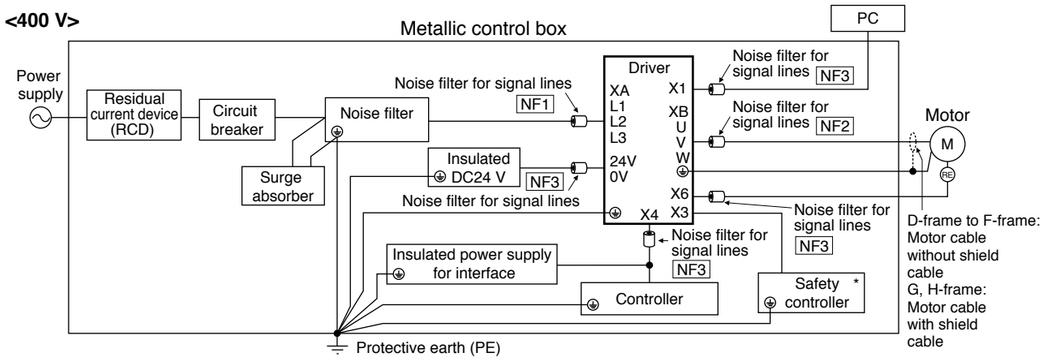


For NF1 to NF3, refer to the Table "Noise Filter for Signal Line" (P.254).
* A5ⅡE, A5E is not provided with X3 terminal.

**<Caution>**

Use options correctly after reading Operating Instructions of the options to better understand the precautions.
Take care not to apply excessive stress to each optional part.

## Power Supply

| | | | | | | |
|---|---|---|---|---|---|---|
| 100 V type (A-frame to C-frame) | Single phase, 100 V | +10 % –15 % | to | 120 V | +10 % –15 % | 50 Hz/60 Hz |
| 200 V type (A-frame to D-frame) | Single/3-phase, 200 V | +10 % –15 % | to | 240 V | +10 % –15 % | 50 Hz/60 Hz |
| 200 V type (E-frame to H-frame) | 3-phase, 200 V | +10 % –15 % | to | 230 V | +10 % –15 % | 50 Hz/60 Hz |
| 400 V type [Main power supply] (D-frame to H-frame) | 3-phase, 380 V | +10 % –15 % | to | 480 V | +10 % –15 % | 50 Hz/60 Hz |
| 400 V type [Control power supply] (D-frame to H-frame) | DC 24 V ±15 % | | | | | |

(1) This product is designed to be used in over-voltage category (installation category) Ⅲ of EN 61800-5-1:2007.
(2) Use an insulated power supply of DC12 V to 24 V which has CE marking or complies with EN60950.



## Circuit Breaker

Install a circuit breaker which complies with IEC Standards and UL recognized (Listed and marked) between power supply and noise filter.
The short-circuit protection circuit on the product is not for protection of branch circuit.
The branch circuit should be protected in accordance with NEC and the applicable local regulations in your area.

## Noise Filter

When you install one noise filter at the power supply for multi-axes application, contact the manufacturer of the noise filter. If noise margin is required, connect 2 filters in series to emphasize effectiveness.

**• Options**

| Option part No. | Voltage specifications for driver | Manufacturer's part No. | Applicable driver (frame) | Manufacturer |
|---|---|---|---|---|
| DV0P4170 | Single phase 100 V, 200 V | SUP-EK5-ER-6 | A-frame and B-frame | Okaya Electric Ind. |

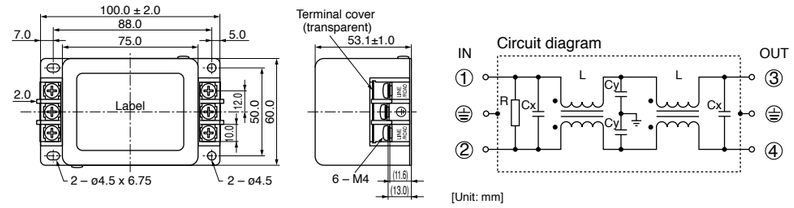


| Option part No. | Voltage specifications for driver | Manufacturer's part No. | Applicable driver (frame) | Manufacturer |
|---|---|---|---|---|
| DV0PM20042 | 3-phase 200 V | 3SUP-HU10-ER-6 | A-frame and B-frame | Okaya Electric Ind. |
| | Single phase 100 V, 200 V 3-phase 200 V | | C-frame | |
| DV0P4220 | Single/3-phase 200 V | 3SUP-HU30-ER-6 | D-frame | |
| DV0PM20043 | 3-phase 200 V | 3SUP-HU50-ER-6 | E-frame | |

[DV0PM20042, DV0P4220]

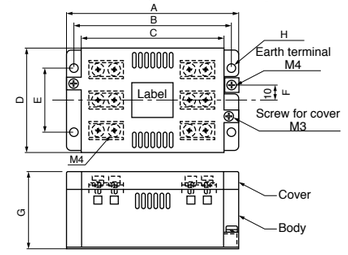


[DV0PM20043]

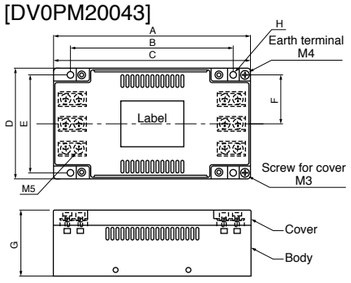


Circuit diagram

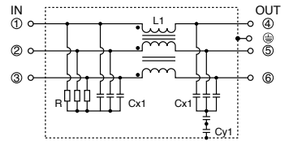


[Size] [Unit: mm]

| | A | B | C | D | E | F | G | H |
|---|---|---|---|---|---|---|---|---|
| DV0PM20042 | 115 | 105 | 95 | 70 | 43 | 10 | 52 | 5.5 |
| DV0P4220 | 145 | 135 | 125 | 70 | 50 | 10 | 52 | 5.5 |
| DV0PM20043 | 165 | 136 | 165 | 90 | 80 | 40 | 54 | 5.5 |

For single phase application, use 2 terminals among 3 terminals, leaving the remaining terminal unconnected.

# Composition of Peripheral Equipments

| Option part No. | Voltage specifications for driver | Manufacturer's part No. | Applicable driver (frame) | Manufacturer |
|---|---|---|---|---|
| DV0P3410 | 3-phase 200 V | 3SUP-HL50-ER-6B | F-frame | Okaya Electric Ind. |

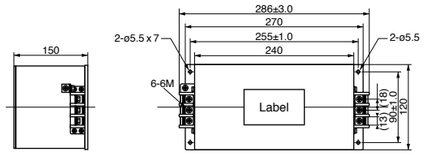


Circuit diagram

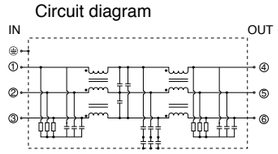


## • Recommended components

| Part No. | Voltage specifications for driver | Current rating (A) | Applicable driver (frame) | Manufacturer |
|---|---|---|---|---|
| RTHN-5010 | 3-phase 200 V | 10 | A-frame to C-frame | TDK-Lambda Corp. |
| RTHN-5030 | | 30 | D-frame | |
| RTHN-5050 | | 50 | E-frame and F-frame | |

[RTHN-5010]

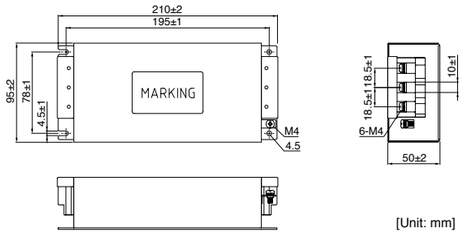


[RTHN-5030]

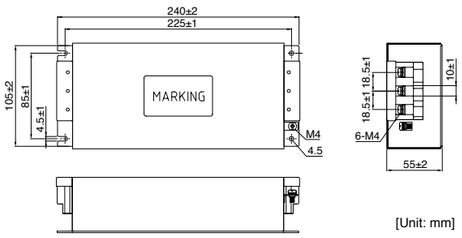


[RTHN-5050]

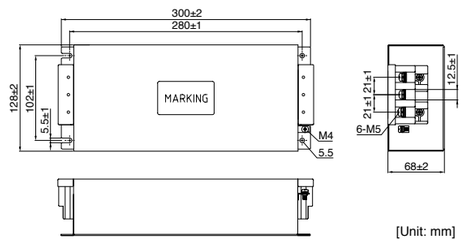


**<Remarks>**
- Select a noise filter of capacity that exceeds the capacity of the power source (also check for load condition).
- For detailed specification of the filter, contact the manufacturer.
- When two or more servo drivers are used with a single noise filter at the common power source, consult with the noise filter manufacturer.



| Part No. | Voltage specifications for driver | Current rating (A) | Applicable driver (frame) | Manufacturer |
|---|---|---|---|---|
| FS5559-60-34 | 3-phase 200 V | 60 | G-frame | Schaffner EMC, Inc. |
| FS5559-80-34 | | 80 | H-frame | |
| FN258L-16-07 | 3-phase 400 V | 16 | D-frame and E-frame | |
| FN258L-30-07 | | 30 | F-frame | |
| FN258-42-07 | | 42 | G-frame and H-frame | |
| FN258-42-33 | | 42 | | |

[FS5559-60-34, FS5559-80-34]

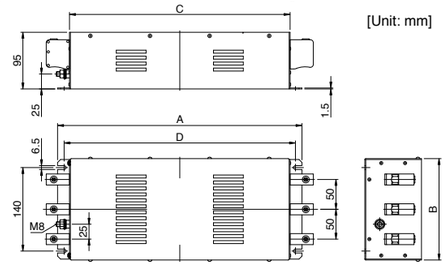


Circuit diagram

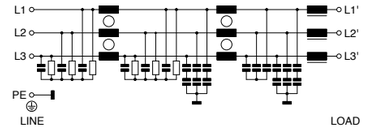


[Size]

| | A | B | C | D |
|---|---|---|---|---|
| FS5559-60-34 | 410 | 170 | 370 | 388 |
| FS5559-80-34 | 460 | 180 | 420 | 438 |

[FN258L-16-07]

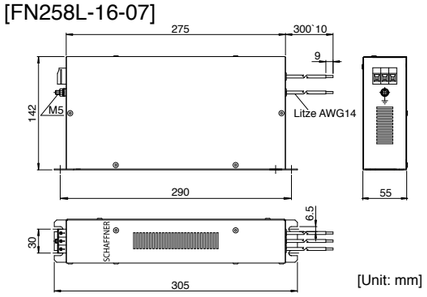


[FN258L-30-07]

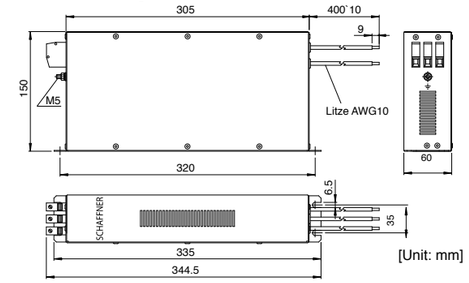


Circuit diagram

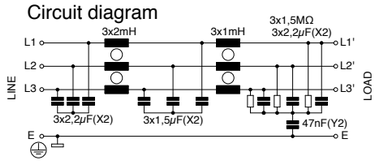


Circuit diagram

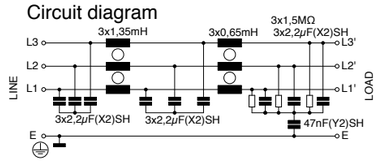


[FN258-42-07]

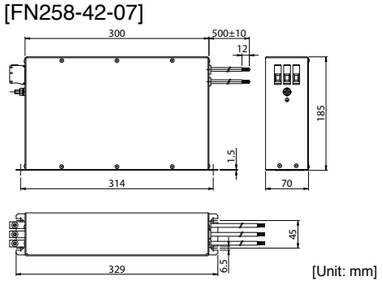


[FN258-42-33]

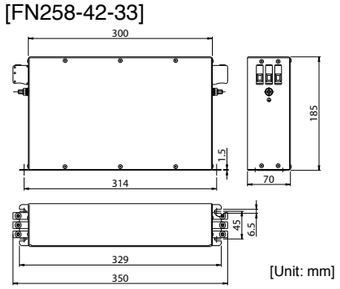


Circuit diagram

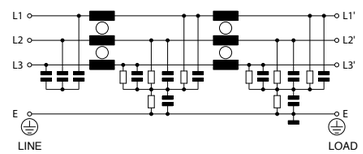


**<Remarks>**
- Select a noise filter of capacity that exceeds the capacity of the power source (also check for load condition).
- For detailed specification of the filter, contact the manufacturer.
- When two or more servo drivers are used with a single noise filter at the common power source, consult with the noise filter manufacturer.

## Surge Absorber

Provide a surge absorber for the primary side of noise filter.

| Option part No. | Voltage specifications for driver | Manufacturer's part No. | Manufacturer |
|---|---|---|---|
| DV0P1450 | 3-phase 200 V | R·A·V-781BXZ-4 | Okaya Electric Ind. |
| DV0PM20050 | 3-phase 400 V | R·A·V-801BXZ-4 | |

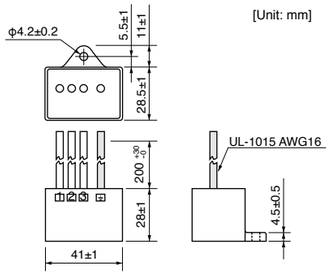


Circuit diagram

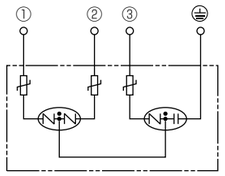


| Option part No. | Voltage specifications for driver | Manufacturer's part No. | Manufacturer |
|---|---|---|---|
| DV0P4190 | Single phase 100 V, 200 V | R·A·V-781BWZ-4 | Okaya Electric Ind. |

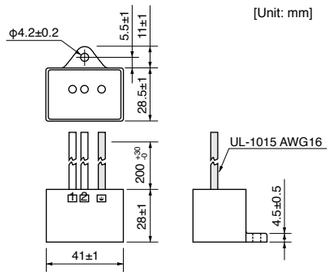


Circuit diagram

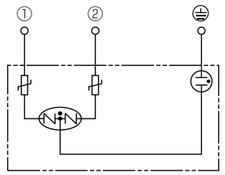


## Noise Filter for Signal Lines

Install noise filters for signal lines to all cables (power cable, motor cable, encoder cable and interface cable)

| Symbol*1 | Cable Name | 100 V/200 V Amp. frame symbol | 400 V Amp. frame symbol | Option part No. | Manufacturer's part No. | Manufacturer | Qty. |
|---|---|---|---|---|---|---|---|
| NF1 | Power cable | A, B, C, D | D, E, F | DV0P1460 | ZCAT3035-1330 | TDK Corp. | 4 |
| | | E, F | — | Recommended components | RJ8035 | KK-CORP.CO.JP | 1 |
| | | G, H | G, H | Recommended components | RJ8095 | KK-CORP.CO.JP | 1 |
| NF2 | Motor cable | A, B, C, D, E, F | D, E, F | DV0P1460 | ZCAT3035-1330 | TDK Corp. | 4 |
| | | G, H | G, H | Recommended components | T400-61D | MICROMETALS | 1 |
| NF3 | • 24 V Power cable<br>• Encoder cable<br>• Interface cable<br>• USB cable<br>• Control power cable | Common (to all frames) | | DV0P1460 | ZCAT3035-1330 | TDK Corp. | 4 |

*1 For symbols, refer to the Block Diagram “Installation Environment” (P.249).

**<Remarks>**

To connect the noise filter to the connector XB connection cable, adjust the sheath length at the tip of the cable, as required.

**<Caution>**

Fix the signal line noise filter in order to prevent excessive stress to the cables.

<Fig.2: Dimensions>

| Part No. | Current | 100 kHz (μH) | Size [Unit: mm] | | | | | | | |
|---|---|---|---|---|---|---|---|---|---|---|
| | | | A | B | C | D1 | D2 | Core thickness | E | F |
| RJ8035 | 35 A | 9.9±3 | 170 | 150 | 23 | 80 | 53 | 24 | R3.5 | 7 |
| RJ8095 | 95 A | 7.9±3 | 200 | 180 | 34 | 130 | 107 | 35 | R3.5 | 7 |

Fig.1: DV0P1460(Option)

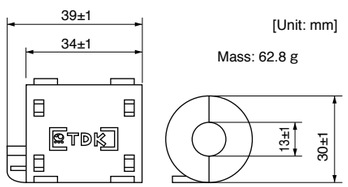


Fig.2: RJ8035, RJ8095
(Recommended components)

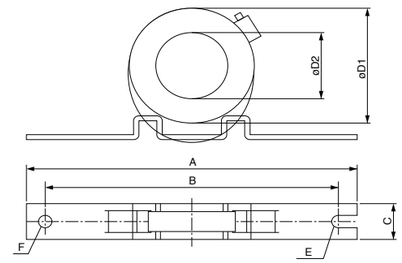


Fig.3: T400-61D
(Recommended components)

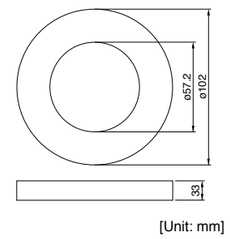


## Residual Current Device

Install a type B Residual current device (RCD) at primary side of the power supply.

Type B: Residual current device which detects a direct-current ingredient.

## Grounding

(1) Connect the protective earth terminal (⏚) of the driver and the protective earth terminal (PE) of the control box without fail to prevent electrical shocks.

(2) Do not make a joint connection to the protective earth terminals (⏚). 2 terminals are provided for protective earth.

**<Note>**

For driver and applicable peripheral equipments, refer to P.19 "Driver and List of Applicable Peripheral Equipments".

# Compliance to EC and EMC Directives

## EC Directives

The EC Directives apply to all such electronic products as those having specific functions and have been exported to EU and directly sold to general consumers. Those products are required to conform to the EU unified standards and to furnish the CE marking on the products. MINAS AC Servos conforms to the EC Directives for Low Voltage Equipment so that the machine incorporating our servos has an easy access to the conformity to relevant EC Directives for the machine.

## EMC Directives

MINAS Servo System conform to relevant standard under EMC Directives setting up certain model (condition) with certain locating distance and wiring of the servo motor and the driver. And actual working condition often differs from this model condition especially in wiring and grounding. Therefore, in order for the machine to conform to the EMC Directives, especially for noise emission and noise terminal voltage, it is necessary to examine the machine incorporating our servos.

## Conformed Standards

| Subject | Conformed Standard | | |
|---|---|---|---|
| Motor | IEC60034-1 | IEC60034-5 UL1004 CSA22.2 No.100 | Conforms to Low- Voltage Directives |
| | EN50178 | UL508C CSA22.2 No.14 | |
| Motor and driver | EN55011 | Radio Disturbance Characteristics of Industrial, Scientific and Medical (ISM) Radio-Frequency Equipment | Conforms to references by EMC Directives |
| | EN61000-6-2 | Immunity for Industrial Environments | |
| | IEC61000-4-2 | Electrostatic Discharge Immunity Test | |
| | IEC61000-4-3 | Radio Frequency Electromagnetic Field Immunity Test | |
| | IEC61000-4-4 | Electric High-Speed Transition Phenomenon/Burst Immunity Test | |
| | IEC61000-4-5 | Lightening Surge Immunity Test | |
| | IEC61000-4-6 | High Frequency Conduction Immunity Test | |
| | IEC61000-4-11 | Instantaneous Outage Immunity Test | |

IEC : International Electrotechnical Commission
EN : Europaischen Normen
EMC : Electromagnetic Compatibility
UL : Underwriters Laboratories
CSA : Canadian Standards Association

Pursuant to at the directive 2004/108/EC,article 9(2)

Panasonic Testing Centre
Panasonic Service Europe,
a division of Panasonic Marketing Europe GmbH
Winsbergring 15,22525 Hamburg,F.R.Germany

# Composition of Peripheral Components

**<Precautions in using options>**
Use options correctly after reading operation manuals of the options to better understand the precautions. Take care not to apply excessive stress to each optional part.

## Installation Environment

Use Minas driver in environment of Pollution Degree 1 or 2 prescribed in IEC-60664-1 (e.g. Install the driver in control panel with IP54 protection structure.)

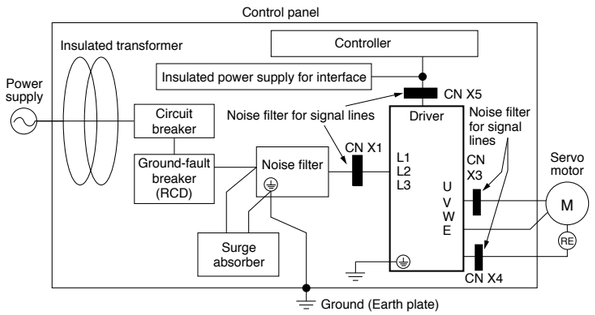


## Power Supply

| | | | |
|---|---|---|---|
| 100 V system | Single phase, 100 V +10 % –15 % | to 115 V +10 % –15 % | 50 Hz/60 Hz |
| 200 V system | Single phase, 200 V +10 % –15 % | to 240 V +10 % –15 % | 50 Hz/60 Hz |
| 200 V system | 3-phase, 200 V +10 % –15 % | to 240 V +10 % –15 % | 50 Hz/60 Hz |

(1) Use the power supply under an environment of Overvoltage Category II specified in IEC60664-1.
(2) For a interface power supply, use the insulated one with 12 VDC to 24 VDC which conforms to CE Marking or EN Standards (EN60950).

## Circuit Breaker

Connect a circuit breaker which conforms to IEC standards and is UL recognized (UL Listed, UL marked), between the power supply and the noise filter.





## Noise Filter

When you install one noise filter in the power supply for multi axis application, consult with the manufacture of the filter.

| Option part No. | Part No. | Manufacturer |
|---|---|---|
| DV0P4160 | 3SUP-HU10-ER-6 | Okaya Electric Industries Co. |

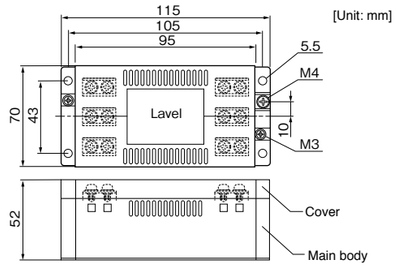


## Surge Absorber

Install a surge absorber at primary side of the noise filter.

| Option part No. | Driver voltage spec | Part No. | Manufacturer |
|---|---|---|---|
| DV0P1450 | 3-phase, 200 V | R·A·V-781BXZ-4 | Okaya Electric |

| Option part No. | Driver voltage spec | Part No. | Manufacturer |
|---|---|---|---|
| DV0P4190 | Single phase, 100 V, 200 V | R·A·V-781BWZ-4 | Okaya Electric |

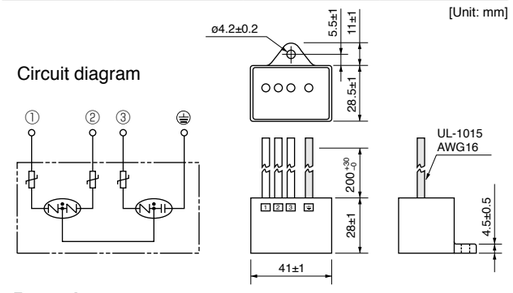


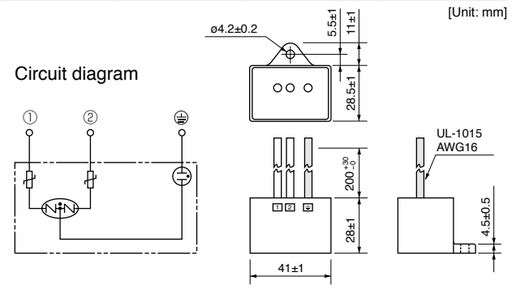


**<Remarks>**
Remove this surge absorber when you perform dielectric test on the machine, or surge absorber might be damaged.

## Noise Filter for Signal Lines

Install noise filters for signal lines to all cables (Power line, motor cable, encoder cable, interface cable)

**<Caution>**
- Please fix a line noise filter to avoid excessive stress to the cable.
- When using multiple axes, noise generated from each driver might influence driver and peripheral equipment and result to malfunction.
  Please insert line noise filters between driver and motor wires (U, V, W but grounding).
  (Please refer to P.255 "peripheral equipment configuration".)

| Option part No. | Part No. | Qty. | Manufacturer |
|---|---|---|---|
| DV0P1460 | ZCAT3035-1330 | 4 | TDK Corp. |

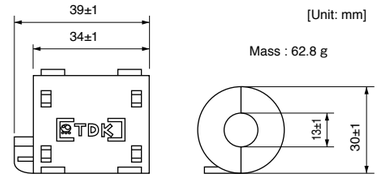


## Grounding

(1) Connect the protective earth terminal of the driver (⏚) and protective earth terminal of the control panel (PE) without fail to prevent electrical shocks.
(2) Do not co-clamp to the ground terminals (⏚). Two ground terminals are provided.

## Ground-Fault Breaker

Install a ground fault curcuit braker (RCD) to the primary side of the power supply.
Please use B-type (DC sensitive) ground fault circuit breakers defined in IEC60947-2, JISC8201-2-2.

# Conformity to UL Standards

Observe the following conditions of (1) and (2) to make the system conform to UL508C (File No. E164620).
(1) Use the driver in an environment of Pollution Degree 2 or 1 prescribed in IEC60664-1. (e.g. Install in the control box with IP54 enclosure.)
(2) Install a circuit breaker or fuse which are UL recognized (LISTED UL marked) between the power supply and the noise filter without fail.

# AC Servo Motor Capacity Selection Software
# Option Selection Software for AC Servo Motor

## AC Servo Motor Capacity Selection Software

We have prepared PC software “M-SELECT” for AC servo motor capacity selection.
Consult our sales representative or authorized distributor.

### • Three-step selection

**1. Select components and specified values**

Select appropriate mechanical parameter items and fill them with parameter values derived from the real machine. To simulate the target machine as practical as possible, use maximum number of parameters available.

**2. Enter operation pattern**

Input the planned operation pattern that will contain [speed and rotation standard] or [absolute position standard] with optional settings such as S-acceleration/deceleration.

**3. Select the motor**

When the data required in step 1 and 2 above have been input, the software lists the motors, which will be appropriate to use with your machine. Select the motor that is best suitable for your machine application.

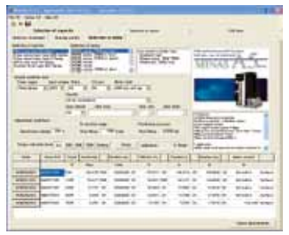

**Details of motor**

Once the motor is selected, specifications of the motor and amplifier, and details of reason for determination are displayed and may be printed out.

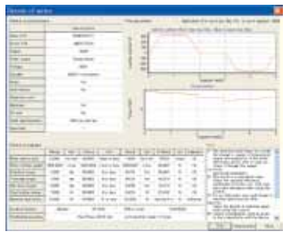

## Option Selection Software for AC Servo Motor

We have prepared PC software to enable fast, easy, and correct option selection, a complicated job without the software.

### • Two procedures for option selection

**1. Selection according to driver series and motor type**

Suitable option can be selected by selecting driver series, motor type and motor specification through pulldown menu.

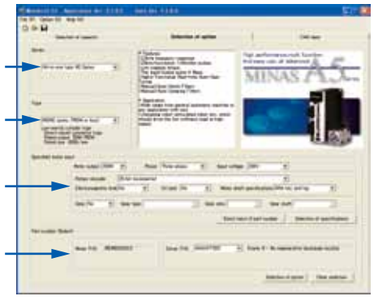


**2. Entry of model number**

If you know the model number based on the servo motor and driver currently used, enter the model number.

**Result of selection**

Tab sheet specific to each of option model numbers is used for easier identification of the desired option.

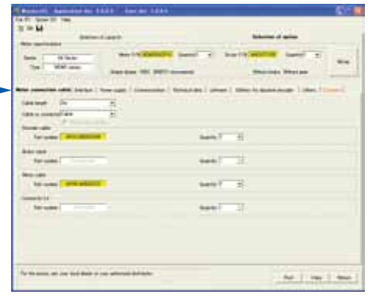


* When you are using the motor capacity selection software, simply press [Option Selection] tab and the screen as shown right will appear.

**Please download from our web site and use after install to the PC.**
**http://industrial.panasonic.com/ww/products/motors-compressors/fa-motors**





# Organization of the System of Units

SI unit — Table 5 : Prefix (Multiples of 10)

- Table1: Basic unit
- Table 2: Auxiliary unit
- Derived unit
  - Table 4 : Unit combined with SI unit
  - Table 3 : Derived unit with proper name
  - Other derived unit

## Table1: Basic unit

| Quantity | Name of unit | Symbol of unit |
|---|---|---|
| Length | meter | m |
| Weight | kilogram | kg |
| Time | second | s |
| Current | ampere | A |
| Thermodynamic temperature | kelvin | K |
| Amount of substance | mol | mol |
| Luminous intensity | candela | cd |

## Table 2: Auxiliary unit

| Quantity | Name of unit | Symbol of unit |
|---|---|---|
| Plane angle | radian | rad |
| Solid angle | steradian | sr |

## Table 3: Major derived unit with proper name

| Quantity | Name | Symbol of unit | Derivation from basic unit, auxiliary unit or other derived unit |
|---|---|---|---|
| Frequency | hertz | Hz | 1 Hz = 1 $s^{-1}$ |
| Force | newton | N | 1 N = 1 kg·m/$s^2$ |
| Pressure, Stress | pascal | Pa | 1 Pa = 1 N/$m^2$ |
| Energy, Work, Amount of heat | joule | J | 1 J = 1 N·m |
| Amount of work, Work efficiency, Power, Electric power | watt | W | 1 W = 1 J/s |
| Electric charge, Amount of electricity | coulomb | C | 1 C = 1 A·s |
| Electric potential, Potential difference, Voltage, Electromotive force | volt | V | 1 V = 1 J/C |
| Electrostatic capacity, Capacitance | farad | F | 1 F = 1 C/V |
| Electric resistance | ohm | Ω | 1 Ω = 1 V/A |
| Electric conductance | siemens | S | 1 S = 1 $Ω^{-1}$ |
| Magnetic flux | weber | Wb | 1 Wb = 1 V·s |
| Magnetic flux density, Magnetic induction | tesla | T | 1 T = 1 Wb/$m^2$ |
| Inductance | henry | H | 1 H = 1 Wb/A |
| Degree centigrade (Celsius) | degree centigrade (Celsius) / degree | ˚C | t ˚C = (t+273.15) K |
| Luminous flux | lumen | lm | 1 lm = 1 cd·sr |
| Illuminance | lux | lx | 1 lx = 1 lm/$m^2$ |

## Table 4: Unit combined with SI unit

| Quantity | Name | Symbol of unit |
|---|---|---|
| Time | minute | min |
| | hour | h |
| | day | d |
| Plane angle | degree | ° |
| | minute | ' |
| | second | " |
| Volume | liter | l, L |
| Weight | ton | t |

## Table 5: Prefix

| Multiples powered to unit | Prefix | |
|---|---|---|
| | Name | Symbol |
| $10^{18}$ | exa | E |
| $10^{15}$ | peta | P |
| $10^{12}$ | tera | T |
| $10^{9}$ | giga | G |
| $10^{6}$ | mega | M |
| $10^{3}$ | kilo | k |
| $10^{2}$ | hecto | h |
| 10 | deca | da |
| $10^{-1}$ | deci | d |
| $10^{-2}$ | centi | c |
| $10^{-3}$ | milli | m |
| $10^{-6}$ | micro | μ |
| $10^{-9}$ | nano | n |
| $10^{-12}$ | pico | p |
| $10^{-15}$ | femto | f |
| $10^{-18}$ | atto | a |

# Major Compatible Unit

| Quantity | Symbol of conventional unit | Symbol of SI unit and compatible unit | Conversion value |
|---|---|---|---|
| Length | μ (micron) | μm | 1 μ = 1 μm (micrometer) |
| Acceleration | Gal | $m/s^2$ | 1 Gal = $10^{-2}$ $m/s^2$ |
| | G | $m/s^2$ | 1 G = 9.80665 $m/s^2$ |
| Frequency | c/s, c | Hz | 1 c/s = Hz |
| Revolving speed, Number of revolutions | rpm | $s^{-1}$ or $min^{-1}$, r/min | 1 rpm = 1 $min^{-1}$ |
| Weight | kgf | – | Same value |
| Mass | – | kg | |
| Weight flow rate | kgf/s | – | Same value |
| Mass flow rate | – | kg/s | |
| Specific weight | $kgf/m^3$ | – | Same value |
| Density | – | $kg/m^3$ | |
| Specific volume | $m^3/kgf$ | $m^3/kg$ | Same value |
| Load | kgf | N | 1 kgf = 9.80665 N |
| Force | kgf | N | 1 kgf = 9.80665 N |
| | dyn | N | 1 dyn = $10^{-5}$ N |
| Moment of force | kgf·m | N·m | 1 kgf·m = 9.806 N·m |
| Pressure | $kgf/cm^2$ | Pa, bar (1) or $kgf/cm^2$ | 1 $kgf/cm^2$ = 9.80665 x $10^4$ Pa |
| | | | = 0.980665 bar |
| | at (Engineering atmospheric pressure) | Pa | 1 at = 9.80665 x $10^4$ Pa |
| | atm (Atmospheric pressure) | Pa | 1 atm = 1.01325 x $10^5$ Pa |
| | $mH_2O$, mAq | Pa | 1 $mH_2O$ = 9.80665 x $10^3$ Pa |
| | mmHg | Pa or mmHg (2) | 1 mmHg = 133.322 Pa |
| | Torr | Pa | |
| Stress | $kgf/mm^2$ | Pa or $N/m^2$ | 1 $kgf/mm^2$ = 9.80665 x $10^6$ Pa |
| | | | =9.80665 x $10^6$ $N/m^2$ |
| | $kgf/cm^2$ | Pa or $N/m^2$ | 1 $kgf/cm^2$ = 9.80665 x $10^4$ Pa |
| | | | = 9.80665 x $10^4$ $N/m^2$ |
| Elastic modulus | $kgf/m^2$ | Pa or $N/m^2$ | 1 $kgf/m^2$ = 9.80665 Pa = 9.80665 $N/m^2$ |
| | | | 1 $kgf/cm^2$ = 9.80665 x $10^4$ $N/m^2$ |
| Energy, Work | kgf·m | J (joule) | 1 kgf·m = 9.80665 J |
| | erg | J | 1 erg = $10^{-7}$ J |
| Work efficiency, Power | kgf·m/s | W (watt) | 1 kgf·m/s = 9.80665 W |
| | PS | W | 1 PS = 0.7355 kW |
| Viscosity | PP | Pa·s | 1 P = 0.1 Pa·s |
| Kinetic viscosity | St | $mm^2/s$ | $10^{-2}$ St = 1 $mm^2/s$ |
| Thermodynamic temperature | K | K (kelvin) | 1 K = 1 K |
| Temperature interval | deg | K (3) | 1 deg = 1 K |
| Amount of heat | cal | J | 1 cal = 4.18605 J |
| Heat capacity | cal/˚C | J/K (3) | 1 cal/˚C = 4.18605 J/K |
| Specific heat, Specific heat capacity | cal/ (kgf·˚C) | cal/ (kgf·K)(3) | 1 cal/ (kgf·˚C) = 4.18605 J/ (kg·K) |
| Entropy | cal/K | J/K | 1 cal/K = 4.18605 J/K |
| Specific entropy | cal/ (kgf·K) | J/(kg·K) | 1 cal/ (kgf·K) = 4.18605 J/ (kg·K) |
| Internal energy (Enthalpy) | cal | J | 1 cal = 4.18605 J |
| Specific internal energy (Specific enthalpy) | cal/kgf | J/kg | 1 cal/kgf = 4.18605 J/kg |
| Heat flux | cal/h | W | 1 kcal/h = 1.16279 W |
| Heat flux density | cal/ ($h·m^2$) | $W/m^2$ | 1 kcal/ ($h·m^2$) = 1.16279 $W/m^2$ |
| Thermal conductivity | cal/ (h·m·˚C) | W/ (m·K) (3) | 1 kcal/ (h·m·˚C) = 1.16279 W/ (m·K) |
| Coefficient of thermal conductivity | cal/ ($h·m^2$·˚C) | W/ ($m^2$·K) (3) | 1 kcal/ ($h·m^2$·˚C) = 1.16279 W/ ($m^2$·K) |
| Intensity of magnetic field | Oe | A/m | 1 Oe = $10^3$ / (4π) A/m |
| Magnetic flux | Mx | Wb (weber) | 1 Mx = $10^{-8}$ Wb |
| Magnetic flux density | Gs,G | T (tesla) | 1 Gs = $10^{-4}$ T |

**Note**
(1) Applicable to liquid pressure. Also applicable to atmospheric pressure of meteorological data, when “bar” is used in international standard.
(2) Applicable to scale or indication of blood pressure manometers.
(3) “˚C” can be substituted for “K”.





# Flow of Motor Selection

## Flow of Motor Selection

**1. Definition of mechanism to be driven by motor.**
Define details of individual mechanical components (ball screw length, lead and pulley diameters, etc.)

**<Typical mechanism>**

Ball screw mechanism

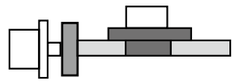

Belt mechanism

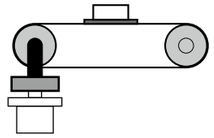

Rack & pinion, etc.

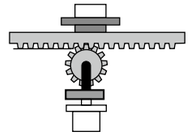

**2. Definition of operating pattern.**
Acceleration/deceleration time, Constant-velocity time, Stop time, Cycle time, Travel distance

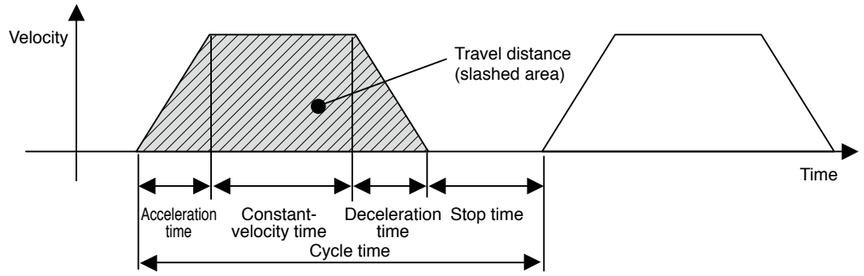


Note) Selection of motor capacity significantly varies depending on the operating pattern.
The motor capacity can be reduced if the acceleration/deceleration time and stop time are set as long as possible.

**3. Calculation of load inertia and inertia ratio.**
Calculate load inertia for each mechanical component. (Refer to "General inertia calculation method" described later.)
Divide the calculated load inertia by the inertia of the selected motor to check the inertia ratio.
For calculation of the inertia ratio, note that the catalog value of the motor inertia is expressed as "× $10^{-4}$ kg·$m^2$".

**4. Calculation of motor velocity**
Calculate the motor velocity from the moving distance, acceleration / deceleration time and constant-velocity time.

**5. Calculation of torque**
Calculate the required motor torque from the load inertia, acceleration/deceleration time and constant-velocity time.

**6. Calculation of motor**
Select a motor that meets the above 3 to 5 requirements.

# Description on the Items Related to Motor Selection

## Description on the Items Related to Motor Selection

**1. Torque**

**(1) Peak torque**

Indicate the maximum torque that the motor requires during operation (mainly in acceleration and deceleration steps). The reference value is 80% or less of the maximum motor torque. If the torque is a negative value, a regenerative discharge resistor may be required.

**(2) Traveling torque, Stop holding torque**

Indicates the torque that the motor requires for a long time. The reference value is 80% or less of the rated motor torque. If the torque is a negative value, a regenerative discharge resistor may be required.

**Traveling torque calculation formula for each mechanism**

**Ball screw mechanism**

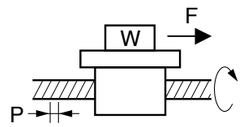


Traveling torque $T_f = \frac{P}{2\pi\eta}(\mu g W + F)$

W : Weight [kg]
P : Lead [m]
F : External force [N]
$\eta$ : Mechanical efficiency
$\mu$ : Coefficient of friction
g : Acceleration of gravity 9.8[m/s²]

**Belt mechanism**

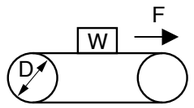


Traveling torque $T_f = \frac{D}{2\pi\eta}(\mu g W + F)$

W : Weight [kg]
P : Pulley diameter [m]
F : External force [N]
$\eta$ : Mechanical efficiency
$\mu$ : Coefficient of friction
g : Acceleration of gravity 9.8[m/s²]

**(3) Effective torque**

Indicates a root-mean-square value of the total torque required for running and stopping the motor per unit time. The reference value is approx. 80% or less of the rated motor torque.

$$T_{rms} = \sqrt{\frac{T_a^2 \times t_a + T_f^2 \times t_b + T_d^2 \times t_d}{t_c}}$$

$T_a$ : Acceleration torque [N·m]
$T_f$ : Traveling torque [N·m]
$T_d$ : Deceleration torque [N·m]
$t_a$ : Acceleration time [s]
$t_b$ : Constant-velocity time [s]
$t_d$ : Deceleration time [s]
$t_c$ : Cycle time [s] (Run time + Stop time)

**2. Motor velocity**

**Maximum velocity**

Maximum velocity of motor in operation: The reference value is the rated velocity or lower value.
When the motor runs at the maximum velocity, you must pay attention to the motor torque and temperature rise. For actual calculation of motor velocity, see "Example of motor selection" described later.



**3. Inertia and inertia ratio**

Inertia is like the force to retain the current moving condition.
Inertia ratio is calculated by dividing load inertia by rotor inertia.
Generally, for motors with 750 W or lower capacity, the inertia ratio should be “20” or less. For motors with 1000 W or higher capacity, the inertia ratio should be “10” or less.
If you need quicker response, a lower inertia ratio is required.
(For example, when the motor takes several seconds in acceleration step, the inertia ratio can be further increased.)

**General inertia calculation method**

| Shape | J calculation formula | Shape | J calculation formula |
|---|---|---|---|
| **Disk** 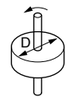 | $J = \frac{1}{8} W D^2$ [kg·m²]<br>W : Weight [kg]<br>D : Outer diameter [m] | **Hollow cylinder** 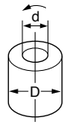 | $J = \frac{1}{8} W (D^2 + d^2)$ [kg·m²]<br>W : Weight [kg]<br>D : Outer diameter [m]<br>d : Inner diameter [m] |
| **Prism** 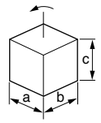 | $J = \frac{1}{12} W (a^2 + b^2)$ [kg·m²]<br>W : Weight [kg]<br>a, b, c : Side length [m] | **Uniform rod** 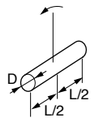 | $J = \frac{1}{48} W (3D^2 + 4L^2)$ [kg·m²]<br>W : Weight [kg]<br>D : Outer diameter [m]<br>L : Length [m] |
| **Straight rod** 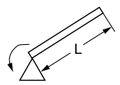 | $J = \frac{1}{3} W L^2$ [kg·m²]<br>W : Weight [kg]<br>L : Length [m] | **Separated rod** 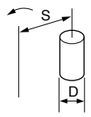 | $J = \frac{1}{8} W D^2 + W S^2$ [kg·m²]<br>W : Weight [kg]<br>D : Outer diameter [m]<br>S : Distance [m] |
| **Reduction gear** 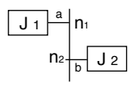 | Inertia on shaft "a"<br>$J = J_1 + (\frac{n_2}{n_1})^2 J_2$[kg·m²]<br>$n_1$ : A rotational speed of a shaft [r/min]<br>$n_2$ : A rotational speed of b shaft [r/min] | | |
| **Conveyor** 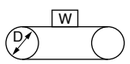 | $J = \frac{1}{4} W D^2$ [kg·m²]<br>W : Workpiece weight on conveyor [kg]<br>D : Drum diameter [m]<br>* Excluding drum J | **Ball screw** 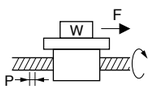 | $J = J_B + \frac{W \cdot P^2}{4\pi^2}$ [kg·m²]<br>W : Weight [kg]<br>P : Lead<br>$J_B$ : J of ball screw |

If weight (W [kg]) is unknown, calculate it with the following formula:

Weight W[kg]=Density $\rho$ [kg/m³] x Volume V[m³]

Density of each material

Iron $\rho$ =7.9 x 10³ [kg/m³]
Aluminum $\rho$ =2.8 x 10³ [kg/m³]
Brass $\rho$ =8.5 x 10³ [kg/m³]

## To Drive Ball Screw Mechanism

**1. Example of motor selection for driving ball screw mechanism**

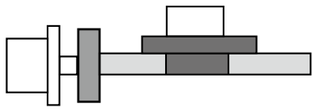

Workpiece weight $W_A = 10$ [kg]
Ball screw length $B_L = 0.5$ [m]
Ball screw diameter $B_D = 0.02$ [m]
Ball screw lead $B_P = 0.02$ [m]
Ball screw efficiency $B\eta = 0.9$
Travel distance 0.3[m]
Coupling inertia $J_C = 10 \times 10^{-6}$ [kg·m²] (Use manufacturer-specified catalog value, or calculation value.)

**2. Running pattern :**

Acceleration time $t_a = 0.1$ [s]
Constant-velocity time $t_b = 0.8$ [s]
Deceleration time $t_d = 0.1$ [s]
Cycle time $t_c = 2$ [s]
Travel distance 0.3[m]

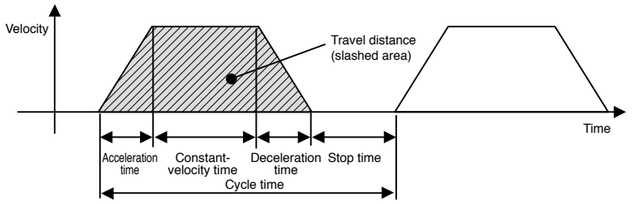


**3. Ball screw weight**

$$B_W = \rho \times \pi \times \left(\frac{B_D}{2}\right)^2 \times B_L = 7.9 \times 10^3 \times \pi \times \left(\frac{0.02}{2}\right)^2 \times 0.5$$
$$= 1.24 \text{ [kg]}$$

**4. Load inertia**

$$J_L = J_C + J_B = J_C + \frac{1}{8} B_W \times B_D^2 + \frac{W_A \cdot B_P^2}{4\pi^2}$$
$$= 0.00001 + (1.24 \times 0.02^2) / 8 + 10 \times 0.02^2 / 4\pi^2$$
$$= 1.73 \times 10^{-4} \text{ [kg·m}^2\text{]}$$

**5. Provisional motor selection**

**In case of MSME 200 W motor :** $J_M = 0.14 \times 10^{-4}$ [kg·m²]

**6. Calculation of inertia ratio**

$J_L / J_M = 1.73 \times 10^{-4} / 0.14 \times 10^{-4}$ Therefore, the inertia ratio is "12.3" (less than "30")
(In case of MSME 100 W motor: $J_M = 0.051 \times 10^{-4}$ Therefore, the inertia ratio is "33.9".)

**7. Calculation of maximum velocity (Vmax)**

$$\frac{1}{2} \times \text{Acceleration time} \times V_{max} + \text{Constant-velocity time} \times V_{max} + \frac{1}{2} \times \text{Deceleration time} \times V_{max} = \text{Travel distance}$$
$$\frac{1}{2} \times 0.1 \times V_{max} + 0.8 \times V_{max} + \frac{1}{2} \times 0.1 \times V_{max} = 0.3$$
$$0.9 \times V_{max} = 0.3$$
$$V_{max} = 0.3 / 0.9 = 0.334 \text{ [m/s]}$$

**8. Calculation of motor velocity (N [r/min]) Ball screw lead per resolution: $B_P = 0.02$ [m]**

$N = 0.334 / 0.02 = 16.7$ [r/s]
$= 16.7 \times 60 = 1002$ [r/min] $<$ 3000 [r/min] (Rated velocity of MSME 200W motor)

**9. Calculation of torque**

Traveling torque
$$T_f = \frac{B_P}{2\pi B\eta} (\mu g W_A + F) = \frac{0.02}{2\pi \times 0.9} (0.1 \times 9.8 \times 10 + 0)$$
$$= 0.035 \text{ [N·m]}$$

Acceleration torque
$$T_a = \frac{(J_L + J_M) \times 2\pi N[r/s]}{\text{Acceleration time [s]}} + \text{Traveling torque}$$
$$= \frac{(1.73 \times 10^{-4} + 0.14 \times 10^{-4}) \times 2\pi \times 16.7}{0.1} + 0.035$$
$$= 0.196 + 0.035 = 0.231 \text{ [N·m]}$$





Deceleration torque
$$T_d = \frac{(J_L + J_M) \times 2\pi N[r/s]}{\text{Deceleration time [s]}} - \text{Traveling torque}$$
$$= \frac{(1.73 \times 10^{-4} + 0.14 \times 10^{-4}) \times 2\pi \times 16.7}{0.1} - 0.035$$
$$= 0.196 - 0.035 = 0.161 \text{ [N·m]}$$

**10. Verification of maximum torque**

Acceleration torque = $T_a = 0.231$ [N·m] $<$ 1.91 [N·m] (Maximum torque of MSME 200 W motor)

**11. Verification of effective torque**

$$T_{rms} = \sqrt{\frac{T_a^2 \times t_a + T_f^2 \times t_b + T_d^2 \times t_d}{t_c}}$$
$$= \sqrt{\frac{0.231^2 \times 0.1 + 0.035^2 \times 0.8 + 0.161^2 \times 0.1}{2}}$$
$$= 0.067 \text{ [N·m]} < 0.64 \text{ [N·m]}$$ (Rated torque of MSME 200 W motor)

**12. Judging from the inertia ratio calculated above, selection of 200 W motor is preferable, although the torque margin is significantly large.**

## Example of Motor Selection

**Example of motor selection for timing belt mechanism**

**1.Mechanism**
Workpiece weight $W_A = 2$[kg] (including belt)
Pulley diameter $P_D = 0.05$[m]
Pulley weight $W_P = 0.5$[kg] (Use manufacturer-specified catalog value, or calculation value.)
Mechanical efficiency $B\eta = 0.8$
Coupling inertia $J_C = 0$ (Direct connection to motor shaft)
Belt mechanism inertia $J_B$
Pulley inertia $J_P$

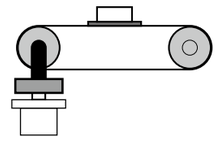

**2. Running pattern**

Acceleration time $t_a = 0.1$[s]
Constant-velocity time $t_b = 0.8$[s]
Deceleration time $t_d = 0.1$[s]
Cycle time $t_c = 2$[s]
Travel distance 1[m]

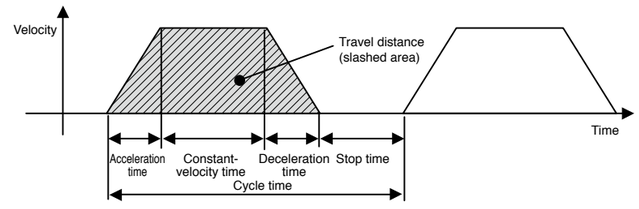


**3. Load inertia** $J_L = J_C + J_B + J_P$

$$= J_C + \frac{1}{4} W_A \times P_D^2 + \frac{1}{8} W_P \times P_D^2 \times 2$$
$$= 0 + \frac{1}{4} \times 2 \times 0.05^2 + \frac{1}{8} \times 0.5 \times 0.05^2 \times 2$$
$$= 0.00156 = 15.6 \times 10^{-4} \text{ [kg·m}^2\text{]}$$

**4. Provisional motor selection**

**In case of MSME 750 W motor :** $J_M = 0.87 \times 10^{-4}$ [kg·m²]

**5. Calculation of inertia ratio**

$J_L / J_M = 15.6 \times 10^{-4} / 0.87 \times 10^{-4}$ Therefore, the inertia ratio is "17.9" (less than "20")

# Example of Motor Selection

**6. Calculation of maximum velocity (Vmax)**

$$\frac{1}{2} \times \text{Acceleration time} \times \text{Vmax} + \text{Constant-velocity time} \times \text{Vmax} + \frac{1}{2} \times \text{Deceleration time} \times \text{Vmax} = \text{Travel distance}$$

$$\frac{1}{2} \times 0.1 \times \text{Vmax} + 0.8 \times \text{Vmax} + \frac{1}{2} \times 0.1 \times \text{Vmax} = 1$$

$$0.9 \times \text{Vmax} = 1$$

$$\text{Vmax} = 1 / 0.9 = 1.111[\text{m/s}]$$

**7. Calculation of motor velocity (N [r/min])**

A single rotation of pulley : $\pi \times P_D = 0.157[\text{m}]$

$N = 1.111 / 0.157 = 7.08[\text{r/s}]$

$= 7.08 \times 60 = 424.8[\text{r/min}] < 3000[\text{r/min}]$ (Rated velocity of MSME 750 W motor)

**8. Calculation of torque**

Traveling torque

$$T_f = \frac{P_D}{2\eta}(\mu g W_A + F) = \frac{0.05}{2 \times 0.8}(0.1 \times 9.8 \times 3 + 0)$$

$$= 0.061[\text{N·m}]$$

Acceleration torque

$$T_a = \frac{(J_L + J_M) \times 2\pi N[\text{r/s}]}{\text{Acceleration time}[\text{s}]} + \text{Traveling torque}$$

$$= \frac{(15.6 \times 10^{-4} + 0.87 \times 10^{-4}) \times 2\pi \times 7.08}{0.1} + 0.061$$

$$= 0.751 + 0.061 = 0.812[\text{N·m}]$$

Deceleration torque

$$T_d = \frac{(J_L + J_M) \times 2\pi N[\text{r/s}]}{\text{Deceleration time}[\text{s}]} - \text{Traveling torque}$$

$$= \frac{(15.6 \times 10^{-4} + 0.87 \times 10^{-4}) \times 2\pi \times 7.08}{0.1} - 0.061$$

$$= 0.751 - 0.061 = 0.69[\text{N·m}]$$

**9. Verification of maximum torque**

Acceleration torque $T_a = 0.812[\text{N·m}] < 7.1[\text{N·m}]$ (Maximum torque of MSME 750 W motor)

**10. Verification of effective torque**

$$T_{rms} = \sqrt{\frac{T_a^2 \times t_a + T_f^2 \times t_b + T_d^2 \times t_d}{t_c}}$$

$$= \sqrt{\frac{0.812^2 \times 0.1 + 0.061^2 \times 0.8 + 0.69^2 \times 0.1}{2}}$$

$= 0.241[\text{N·m}] < 2.4[\text{N·m}]$ (Rated torque of MSME 750 W motor)

**11. Judging from the above calculation result, selection of MSME 750W motor is acceptable.**



# Request Sheet for Motor Selection

Request for motor selection Ⅰ : Ball screw drive

## 1. Driven mechanism and running data

| | | | |
|---|---|---|---|
| 1) | Travel distance of the work load per one cycle | $\ell_1$: | mm |
| 2) | Cycle time | $t_0$: | s |
| | (Fill in items 3) and 4) if required.) | | |
| 3) | Acceleration time | $t_a$: | s |
| 4) | Deceleration time | $t_d$: | s |
| 5) | Stopping time | $t_s$: | s |
| 6) | Max. velocity | V: | mm/s |
| 7) | External force | F: | N |
| 8) | Positioning accuracy of the work load | ± | mm |
| 9) | Total weight of the work load and the table | $W_A$: | kg |
| 10) | Power supply voltage | | V |
| 11) | Diameter of the ball screw | | mm |
| 12) | Total length of the ball | | mm |
| 13) | Lead of the ball screw | | mm |
| 14) | Traveling direction (horizontal, vertical etc.) | | |

Running pattern

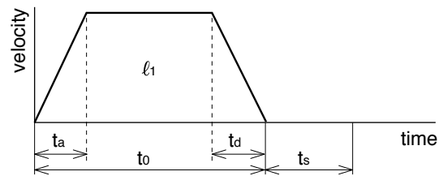


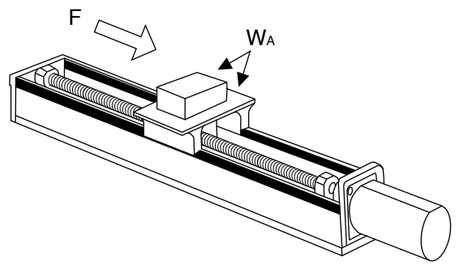


## 2. Other data (Fill the details on specific mechanism and its configurations in the following blank.)

Company name :

Department/Section :

Name :

Address :

Tel :

Fax :

E-mail address:

# Request Sheet for Motor Selection

## Request for motor selection Ⅱ : Timing pulley + Ball screw drive

### 1. Driven mechanism and running data

| | | | | | Motor side | Ball screw side |
|---|---|---|---|---|---|---|
| 1) | Travel distance of the work load per one cycle | $\ell_1$: mm | 15) | Diameter of the pulley | $D_1$: mm | $D_2$: mm |
| 2) | Cycle time | $t_0$: s | 16) | Weight of the pulley | $W_1$: kg | $W_2$: kg |
| | (Fill in items 3) and 4) if required.) | | | (or item 17) and 18)) | | |
| 3) | Acceleration time | $t_a$: s | 17) | Width of the pulley | $L_1$: mm | |
| 4) | Deceleration time | $t_d$: s | 18) | Material of the pulley | | |
| 5) | Stopping time | $t_s$: s | 19) | Weight of the belt | $W_M$: kg | |
| 6) | Max. velocity | V: mm/s | | | | |
| 7) | External force | F: N | | | | |
| 8) | Positioning accuracy of the work load | ± mm | | | | |
| 9) | Total weight of the work load and the table | $W_A$: kg | | | | |
| 10) | Power supply voltage | V | | | | |
| 11) | Diameter of the ball screw | mm | | | | |
| 12) | Total length of the ball screw | mm | | | | |
| 13) | Lead of the ball screw | mm | | | | |
| 14) | Traveling direction (horizontal, vertical etc.) | | | | | |

Running pattern

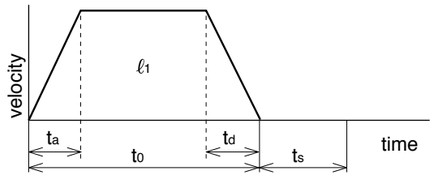


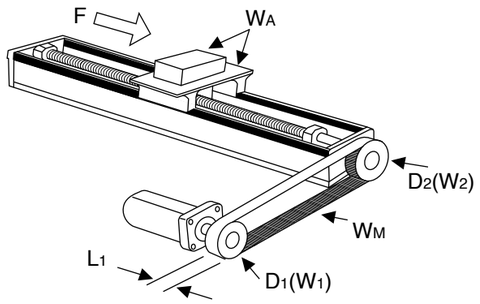


### 2. Other data (Fill the details on specific mechanism and its configurations in the following blank.)

Company name :
Department/Section :
Name :
Address :
Tel :
Fax :
E-mail address:



# Request Sheet for Motor Selection

## Request for motor selection Ⅲ : Belt drive

### 1. Driven mechanism and running data

| | | | | | |
|---|---|---|---|---|---|
| 1) | Travel distance of the work load per one cycle | $\ell_1$: mm | | | |
| 2) | Cycle time | $t_0$: s | | | |
| | (Fill in items 3) and 4) if required.) | | | | |
| 3) | Acceleration time | $t_a$: s | | | |
| 4) | Deceleration time | $t_d$: s | | | |
| 5) | Stopping time | $t_s$: s | | | |
| 6) | Max. velocity | V: mm/s | | | |
| 7) | External force | F: N | | | |
| 8) | Positioning accuracy of the work load | ± mm | | | |
| 9) | Total weight of the work load | $W_A$: kg | | | |
| 10) | Power supply voltage | V | | | |
| 11) | Weight of the belt | $W_M$: kg | 14) | Width of the pulley | $L_1$: mm |
| 12) | Diameter of the driving pulley | $D_1$: mm | 15) | Material of the pulley | |
| 13) | Total weight of the pulley | $W_1$: kg | 16) | Traveling direction (horizontal, vertical etc.) | |

Running pattern

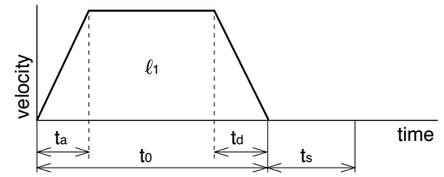


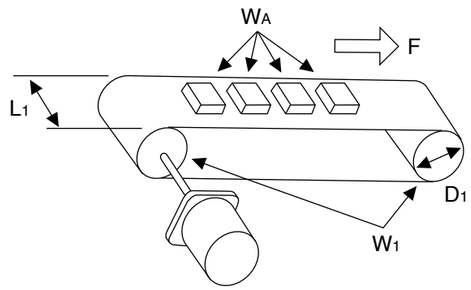


(or item 14) and 15))

### 2. Other data (Fill the details on specific mechanism and its configurations in the following blank.)

Company name :
Department/Section :
Name :
Address :
Tel :
Fax :
E-mail address:

# Request Sheet for Motor Selection

## Request for motor selection Ⅳ : Timing pulley + Belt drive

### 1. Driven mechanism and running data

| | | |
|---|---|---|
| 1) | Travel distance of the work load per one cycle | $\ell_1$: mm |
| 2) | Cycle time | $t_0$: s |
| | (Fill in items 3) and 4) if required.) | |
| 3) | Acceleration time | $t_a$: s |
| 4) | Deceleration time | $t_d$: s |
| 5) | Stopping time | $t_s$: s |
| 6) | Max. velocity | V: mm/s |
| 7) | External force | F: N |
| 8) | Positioning accuracy of the work load | ± mm |
| 9) | Total weight of the work load | $W_A$: kg |
| 10) | Power supply voltage | V |
| 11) | Weight of motor side belt | $W_M$: kg |

| | | Motor side | Belt side |
|---|---|---|---|
| 12) | Diameter of the pulley | $D_1$: mm | $D_2$: mm |
| 13) | Weight of the pulley | $W_1$: kg | $W_2$: kg |
| | (or item 14) and 15)) | | |
| 14) | Width of the belt | $L_1$: mm | |
| 15) | Material of the pulley | | |

| | | Motor side | Belt side |
|---|---|---|---|
| 16) | Diameter of the pulley | $D_3$: mm | $D_4$: mm |
| 17) | Weight of the pulley | $W_3$: kg | $W_4$: kg |
| | (or item 18) and 19)) | | |
| 18) | Width of the pulley | $L_2$: mm | |
| 19) | Material of the pulley | | |
| 20) | Weight of the belt | $W_L$: kg | |
| 21) | Traveling direction (horizontal, vertical etc.) | | |

Running pattern

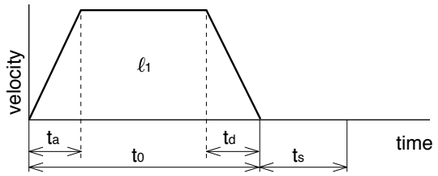


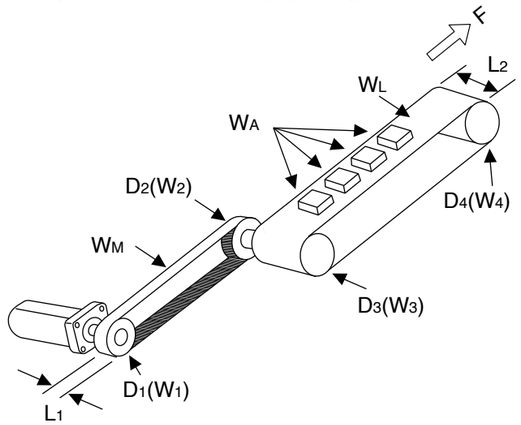


### 2. Other data (Fill the details on specific mechanism and its configurations in the following blank.)

Company name :

Department/Section :

Name :

Address :

Tel :

Fax :

E-mail address:



# Request Sheet for Motor Selection

## Request for motor selection Ⅴ : Turntable drive

### 1. Driven mechanism and running data

| | | |
|---|---|---|
| 1) | Travel distance of the work load per one cycle | $d_1$: deg |
| 2) | Cycle time | $t_0$: s |
| | (Fill in items 3) and 4) if required.) | |
| 3) | Acceleration time | $t_a$: s |
| 4) | Deceleration time | $t_d$: s |
| 5) | Stopping time | $t_s$: s |
| 6) | Max. rotational speed of the table | v: deg/s |
| | (or) | V: r/s |
| 7) | Positioning accuracy of the work load | ± deg |
| 8) | Weight of one work load | $W_A$: kg |
| 9) | Driving radius of the center of gravity of the work | $R_1$: mm |
| 10) | Diameter of the table | $D_1$: mm |
| 11) | Mass of the table | $W_1$: kg |
| 12) | Diameter of the table support | $T_1$: mm |
| 13) | Power supply voltage | V |

| | | Prism | Cylinder |
|---|---|---|---|
| 14) | Dimensions of the work load | a: mm | a: mm |
| | | b: mm | b: mm |
| | | c: mm | c: mm |
| 15) | Number of work loads | pcs | |

Running pattern

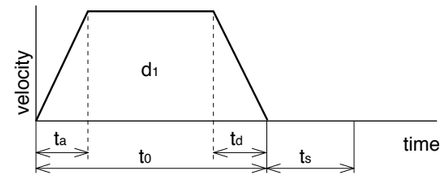


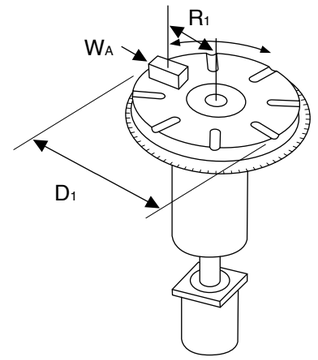


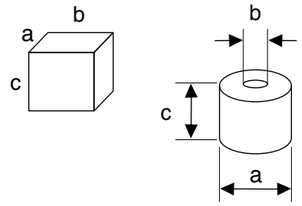


### 2. Other data (Fill the details on specific mechanism and its configurations in the following blank.)

Company name :

Department/Section :

Name :

Address :

Tel :

Fax :

E-mail address:

# Request Sheet for Motor Selection

## Request for motor selection Ⅵ : Timing pulley + Turntable drive

### 1. Driven mechanism and running data

| | | | |
|---|---|---|---|
| 1) | Travel distance of the work load per one cycle | $d_1$: | deg |
| 2) | Cycle time | $t_0$: | s |
| | (Fill in items 3) and 4) if required.) | | |
| 3) | Acceleration time | $t_a$: | s |
| 4) | Deceleration time | $t_d$: | s |
| 5) | Stopping time | $t_s$: | s |
| 6) | Max. rotational speed of the table | v: | deg/s |
| | (or) | V: | r/s |
| 7) | Positioning accuracy of the work load | ± | deg |
| 8) | Weight of one work load | $W_A$: | kg |
| 9) | Driving radius of the center of gravity of the work | $R_1$: | mm |
| 10) | Diameter of the table | $D_1$: | mm |
| 11) | Mass of the table | $W_1$: | kg |
| 12) | Diameter of the table support | $T_1$: | mm |
| 13) | Power supply voltage | | V |

| | | (Prism) | (Cylinder) |
|---|---|---|---|
| 14) | Dimension of the work load | a: mm | a: mm |
| | | b: mm | b: mm |
| | | c: mm | c: mm |
| 15) | Number of work loads | | pcs |

| | | Motor side | Turntable side |
|---|---|---|---|
| 16) | Diameter of the pulley | $D_2$: mm | $D_3$: mm |
| 17) | Weight of the pulley | $W_2$: kg | $W_3$: kg |
| | (or item 18) and 19)) | | |
| 18) | Width of the pulley | $L_1$: mm | |
| 19) | Material of the pulley | | |
| 20) | Weight of the belt | $W_M$: kg | |

Running pattern

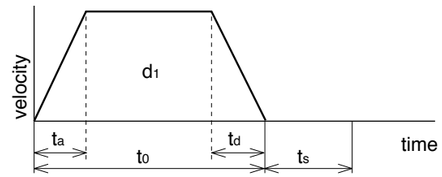


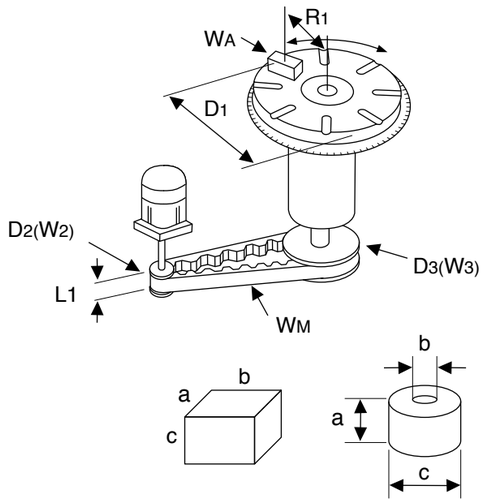


### 2. Other data (Fill the details on specific mechanism and its configurations in the following blank.)

| | |
|---|---|
| | Company name : |
| | Department/Section : |
| | Name : |
| | Address : |
| | Tel : |
| | Fax : |
| | E-mail address: |



# Request Sheet for Motor Selection

## Request for motor selection Ⅶ : Roller feed drive

### 1. Driven mechanism and running data

| | | | |
|---|---|---|---|
| 1) | Travel distance of the work load per one cycle | $\ell_1$: | mm |
| 2) | Cycle time | $t_0$: | s |
| | (Fill in items 3) and 4) if required.) | | |
| 3) | Acceleration time | $t_a$: | s |
| 4) | Deceleration time | $t_d$: | s |
| 5) | Stopping time | $t_s$: | s |
| 6) | Max. velocity | v: | mm/s |
| 7) | External pulling force | F: | N |
| 8) | Positioning accuracy of the work load | ± | mm |
| 9) | Number of rollers | | pcs |
| 10) | Power supply voltage | | V |
| 11) | Diameter of the roller | $D_1$: | mm |
| 12) | Mass of the roller | $W_1$: | kg |

Running pattern

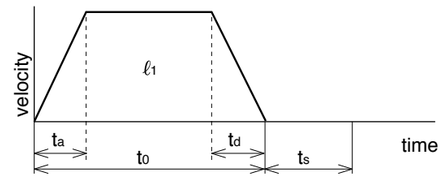


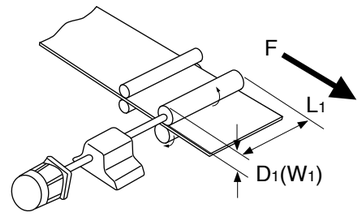


(or item 13) and 14))

| | | | |
|---|---|---|---|
| 13) | Width of the roller | $L_1$: | mm |
| 14) | Material of the roller | | |

### 2. Other data (Fill the details on specific mechanism and its configurations in the following blank.)

| | |
|---|---|
| | Company name : |
| | Department/Section : |
| | Name : |
| | Address : |
| | Tel : |
| | Fax : |
| | E-mail address: |

# Request Sheet for Motor Selection

Request for motor selection Ⅷ : Driving with Rack & Pinion

## 1. Driven mechanism and running data

| | | | |
|---|---|---|---|
| 1) | Travel distance of the work load per one cycle | $\ell_1$: | mm |
| 2) | Cycle time | $t_0$: | s |
| | (Fill in items 3) and 4) if required.) | | |
| 3) | Acceleration time | $t_a$: | s |
| 4) | Deceleration time | $t_d$: | s |
| 5) | Stopping time | $t_s$: | s |
| 6) | Max. velocity | V: | mm/s |
| 7) | External force | F: | N |
| 8) | Positioning accuracy of the work load | ± | mm |
| 9) | Total weight of the work load | $W_A$: | kg |
| 10) | Power supply voltage | | V |
| 11) | Diameter of the pinion | $D_3$: | mm |
| 12) | Mass of the pinion | $W_3$: | kg |
| 13) | Traveling direction (horizontal, vertical, etc.) | | |

Running pattern

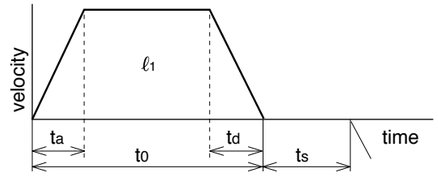


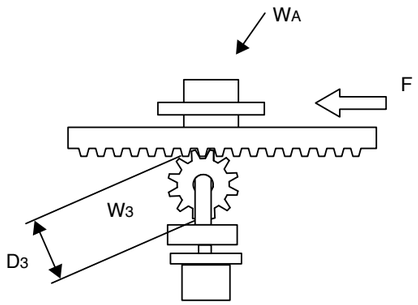


## 2. Other data (Fill the details on specific mechanism and its configurations in the following blank.)

Company name :

Department/Section :

Name :

Address :

Tel :

Fax :

E-mail address:





# Connection Between Driver and Controller

## FP7-AFP7PP02T/L(2-axes) AFP7PP04T/L(4-axes) Connection with the Panasonic devices SUNX.

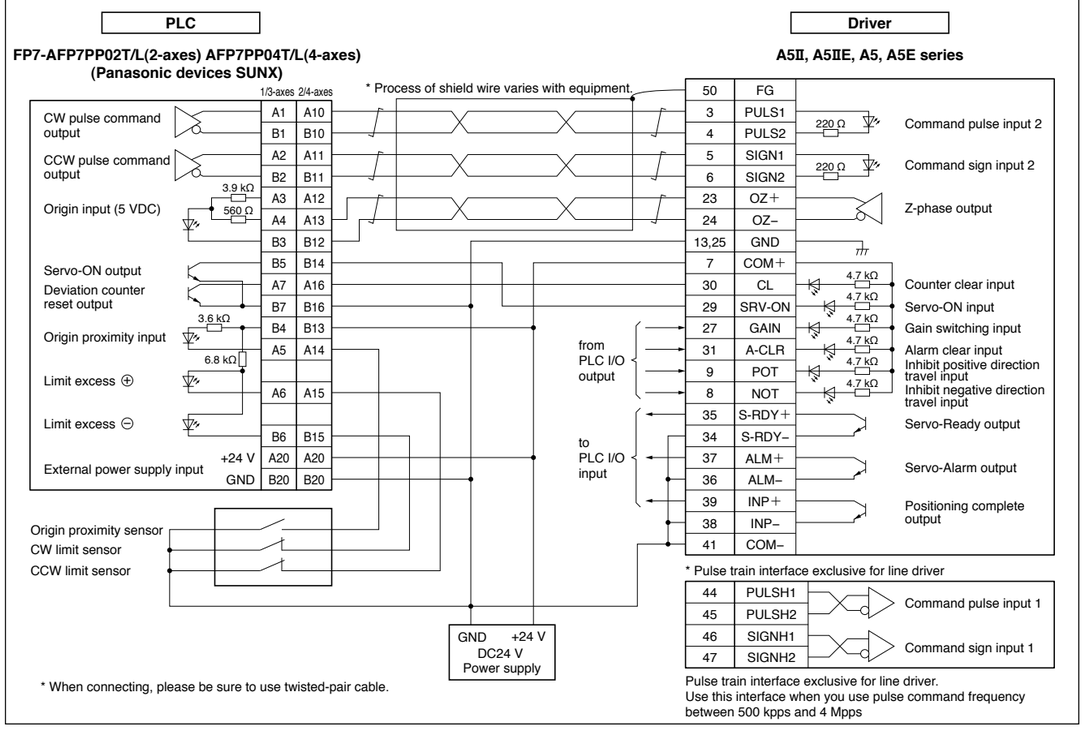


## FPG-PP12 AFPG432 Connection with the Panasonic devices SUNX.

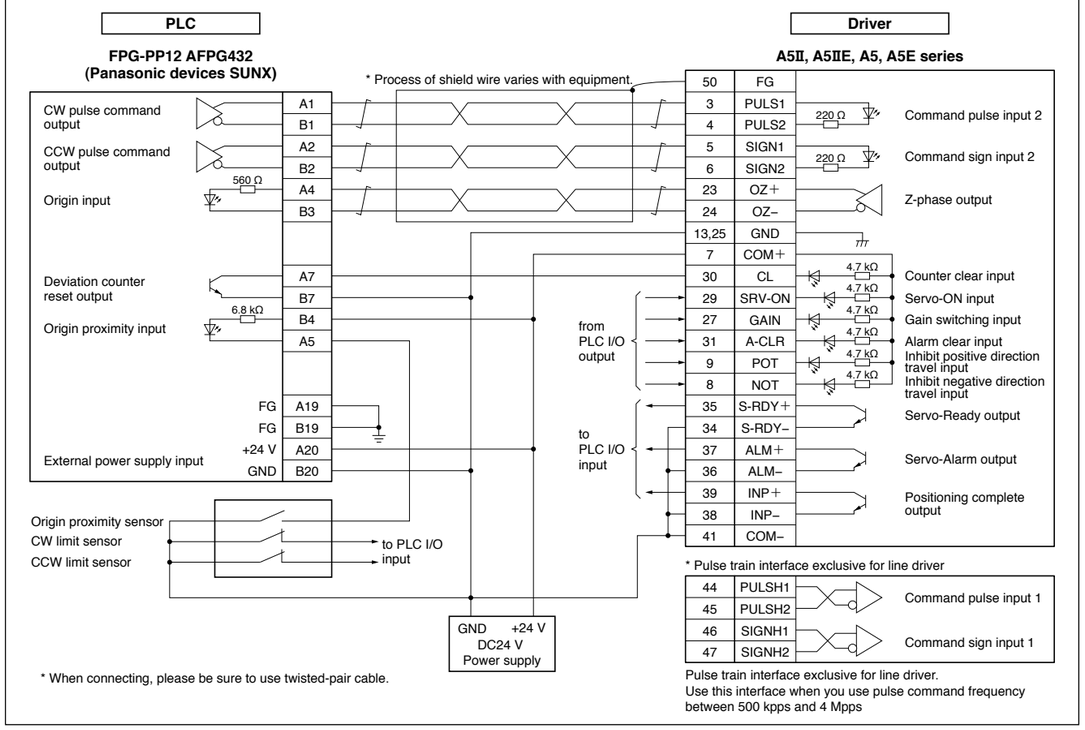

# Connection Between Driver and Controller

## FP2-PP2 AFP2430 Connection with the Panasonic devices SUNX.

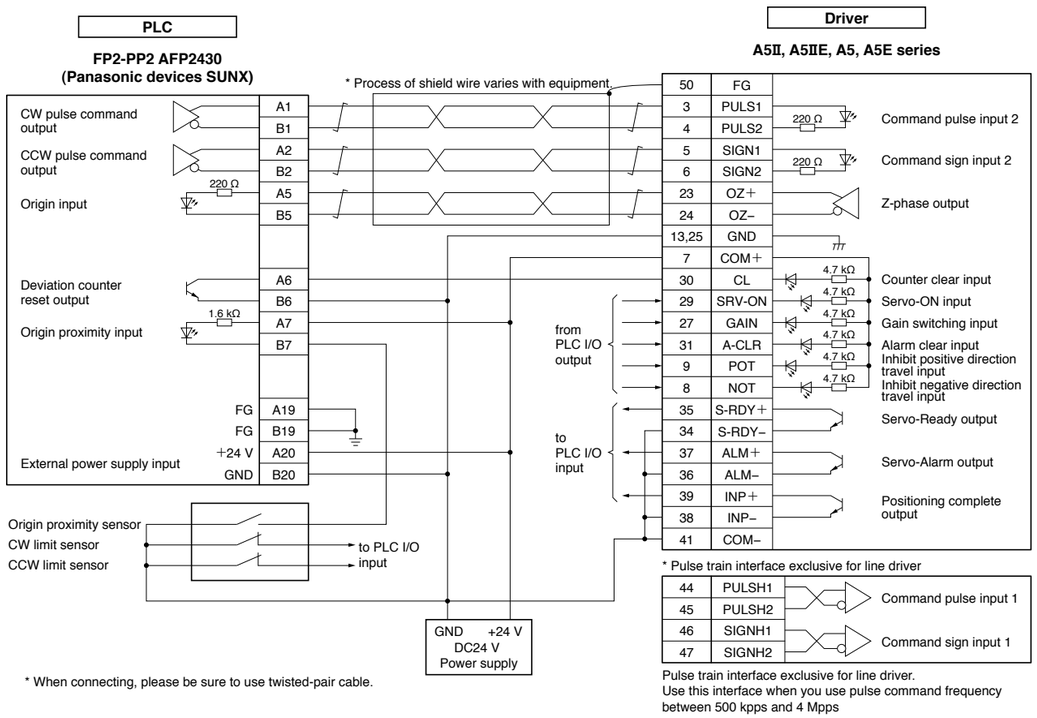


## F3YP22-0P/F3YP24-0P/F3YP28-0P Connection with the Yokogawa Electric Corp.

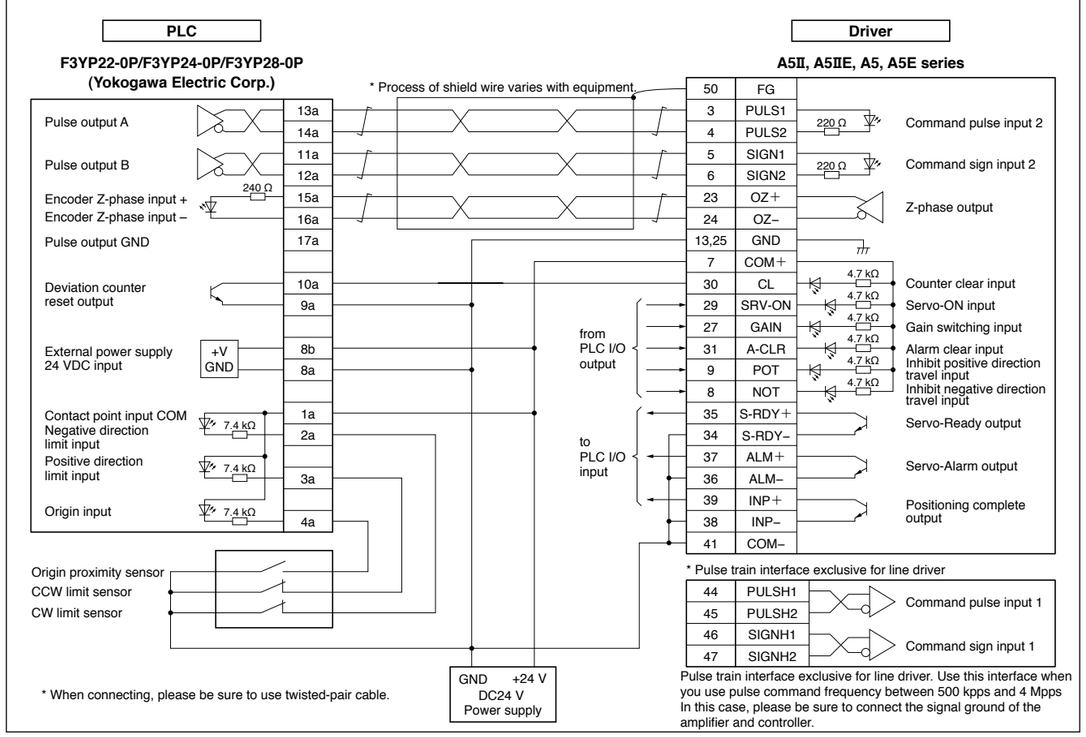


## FPG-C32T Connection with the Panasonic devices SUNX.

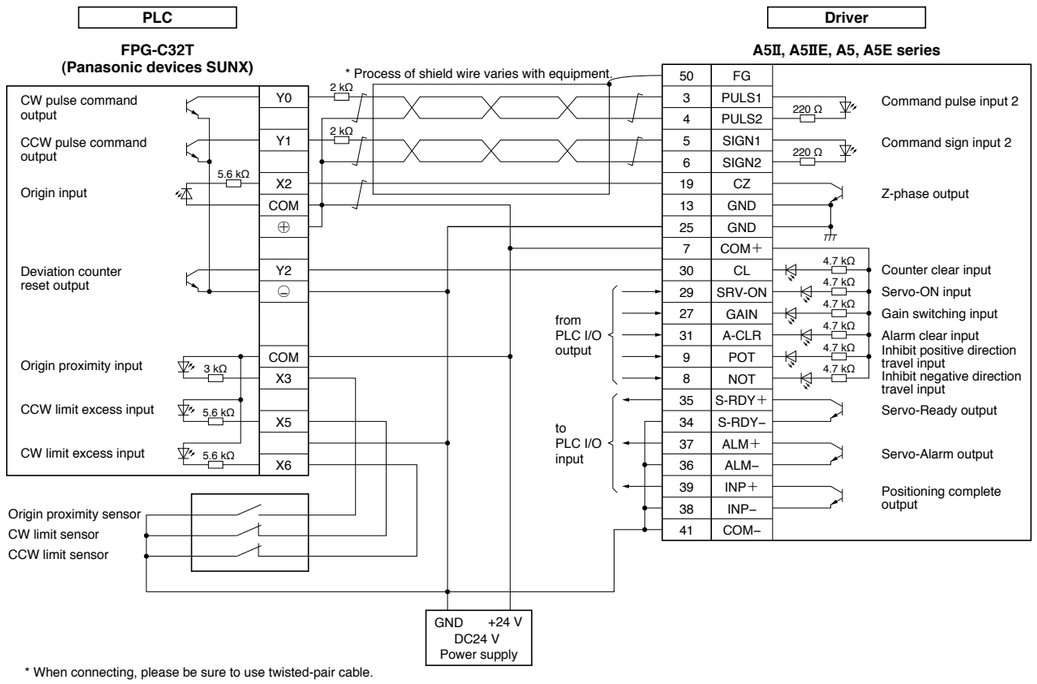


## F3NC32-ON/F3NC34-ON Connection with the Yokogawa Electric Corp.

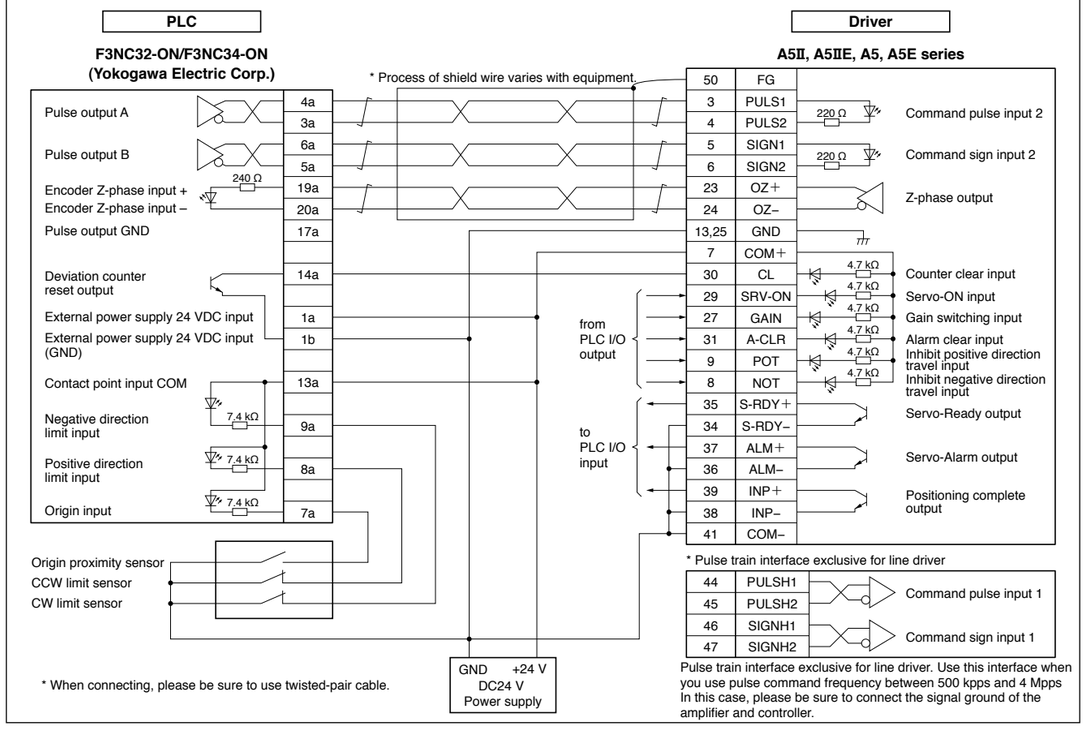

# Connection Between Driver and Controller

## CJ1W-NC113 Connection with the Omron Corp.

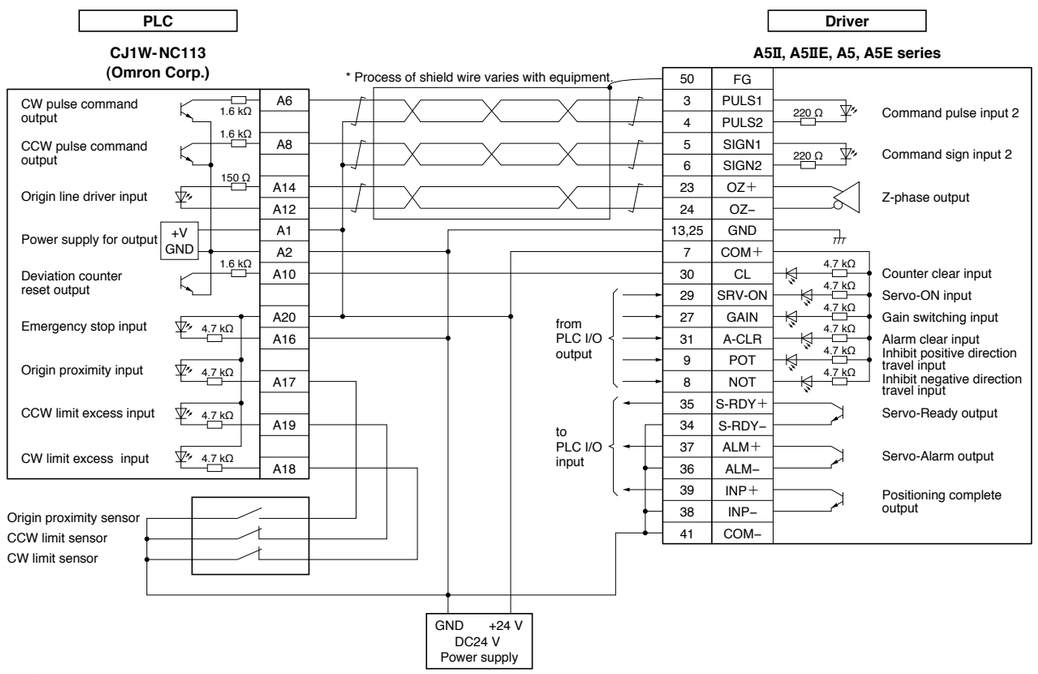


## QD75D1 Connection with the Mitsubishi Electric Corp.

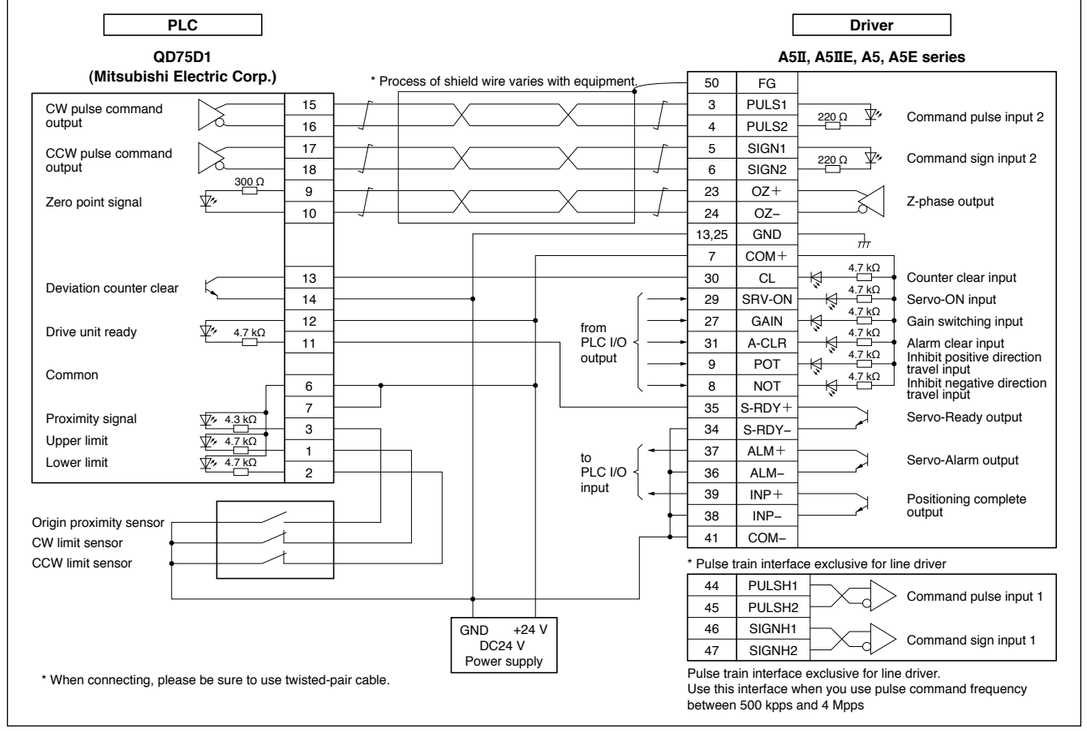


## CJ1W-NC133 Connection with the Omron Corp.

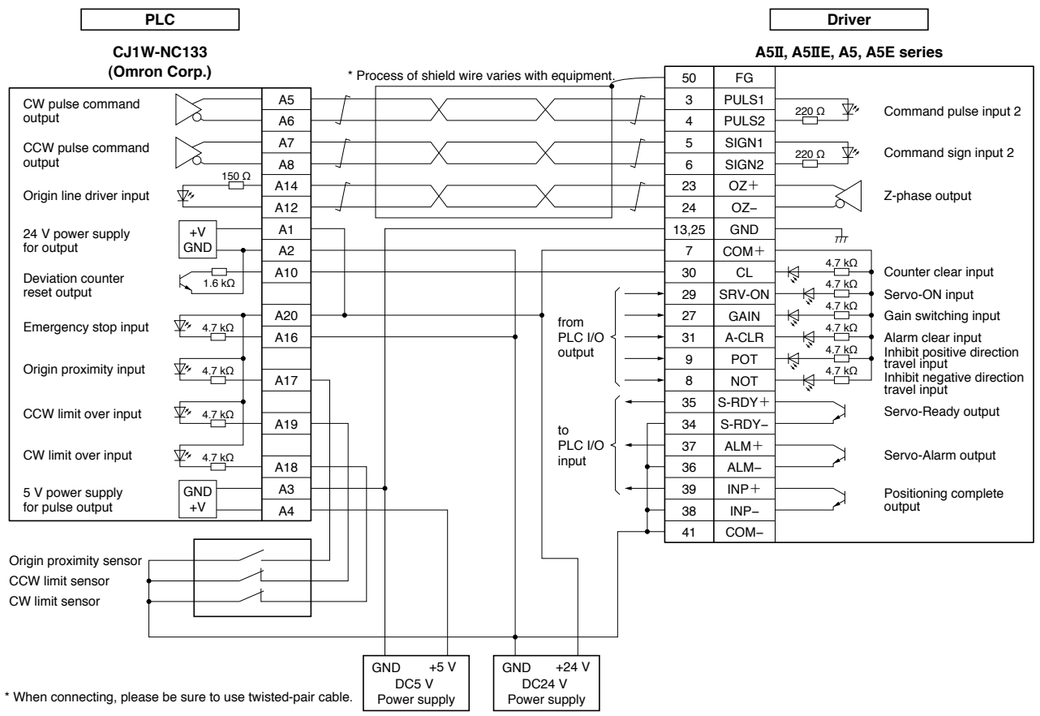


## KV-5000/3000 Connection with the KEYENCE Corp.

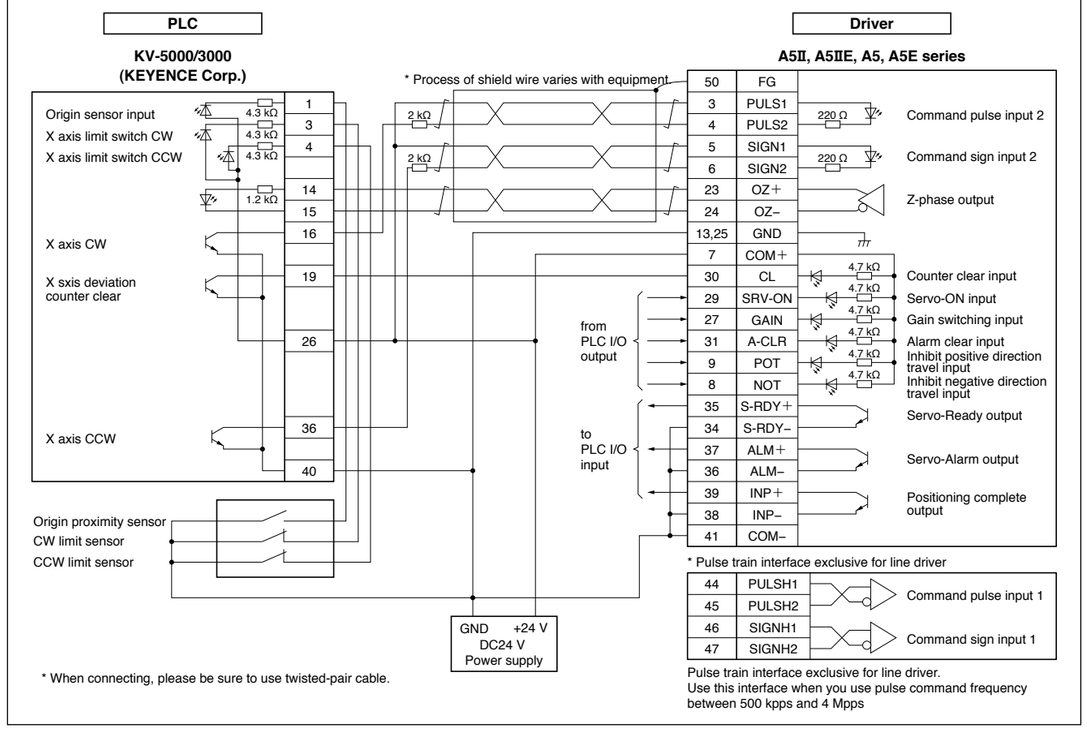

# Replacing Old Model Servo Driver with MINAS A5Ⅱ, A5 series

For easier replacement of old driver (MINAS X/XX/V series) with A5Ⅱ, A5 series, use the interface conversion connector.

〈36-pin → 50-pin〉

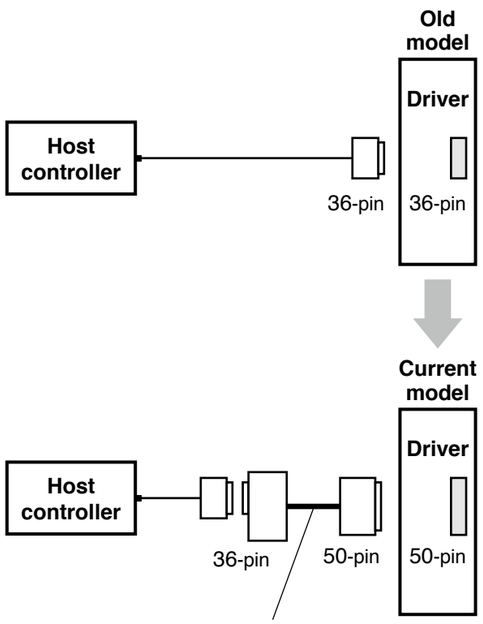


**36-pin → 50-pin Conversion cable**

DV0P4120
DV0P4121

〈50-pin → 50-pin〉

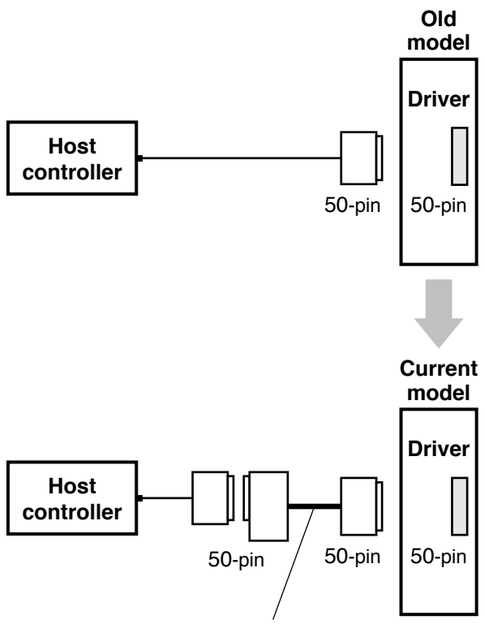


**50-pin → 50-pin Conversion cable**

DV0P4130
DV0P4131
DV0P4132

When selecting the cable, refer to the table below because the part number of the cable is specific to the control mode of the old model.

| Old model | Control mode | Conversion cable part No. | Conversion wiring table |
|---|---|---|---|
| X series<br>XX series<br>(36-pin) | Position/velocity control | DV0P4120 | P.280 |
| | Torque control | DV0P4121 | |
| V series<br>(50-pin) | Position control | DV0P4130 | P.281 |
| | Velocity control | DV0P4131 | |
| | Torque control | DV0P4132 | P.282 |

* For external dimensions, refer to P.197.



## Conversion Wiring Table

| Pin No. on Old Model | DV0P4120 | | | DV0P4121 | | |
|---|---|---|---|---|---|---|
| | Pin No. on Current Model | Signal Name | Symbol | Pin No. on Current Model | Signal Name | Symbol |
| 1 | 23 | Z-phase output | OZ+ | 23 | Z-phase output | OZ+ |
| 2 | 24 | Z-phase output | OZ– | 24 | Z-phase output | OZ– |
| 3 | 13 | Signal ground | GND | 13 | Signal ground | GND |
| 4 | 19 | Z-phase output | CZ | 19 | Z-phase output | CZ |
| 5 | 4 | Command pulse input 2 | PULS2 | 4 | Command pulse input 2 | PULS2 |
| 6 | 3 | Command pulse input 2 | PULS1 | 3 | Command pulse input 2 | PULS1 |
| 7 | 6 | Command pulse sign input 2 | SIGN2 | 6 | Command pulse sign input 2 | SIGN2 |
| 8 | 5 | Command pulse sign input 2 | SIGN1 | 5 | Command pulse sign input 2 | SIGN1 |
| 9 | 33 | Command pulse inhibition input | INH | 33 | Command pulse inhibition input | INH |
| 10 | 26 | Speed zero clamp input | ZEROSPD | 26 | Speed zero clamp input | ZEROSPD |
| 11 | 7 | Power supply for control signal (+) | COM+ | 7 | Power supply for control signal (+) | COM+ |
| 12 | 29 | Servo-ON input | SRV-ON | 29 | Servo-ON input | SRV-ON |
| 13 | 30 | Deviation counter clear input | CL | 30 | Deviation counter clear input | CL |
| 14 | 14 | Speed command input | SPR | NC | | |
| 15 | 15 | Signal ground | GND | 15 | Signal ground | GND |
| 16 | 43 | Speed monitor output | SP | 43 | Speed monitor output | SP |
| 17 | 25 | Signal ground | GND | 25 | Signal ground | GND |
| 18 | 50 | Frame ground | FG | 50 | Frame ground | FG |
| 19 | 21 | A-phase output | OA+ | 21 | A-phase output | OA+ |
| 20 | 22 | A-phase output | OA- | 22 | A-phase output | OA- |
| 21 | 48 | B-phase output | OB+ | 48 | B-phase output | OB+ |
| 22 | 49 | B-phase output | OB– | 49 | B-phase output | OB– |
| 23 | NC | | | NC | | |
| 24 | NC | | | NC | | |
| 25 | 39 | Positioning complete output<br>Speed arrival output | COIN+<br>AT-SPEED+ | 39 | Positioning complete output<br>Speed arrival output | COIN+<br>AT-SPEED+ |
| 26 | 37 | Servo-Alarm output | ALM+ | 37 | Servo-Alarm output | ALM+ |
| 27 | 35 | Servo-Ready output | S-RDY+ | 35 | Servo-Ready output | S-RDY+ |
| 28 | 34 | Positioning complete output (–)<br>Speed arrival output (–) | COIN–<br>AT-SPEED– | 34 | Positioning complete output (–)<br>Speed arrival output (–) | COIN–<br>AT-SPEED– |
| | 36 | Servo-Alarm output (–) | ALM– | 36 | Servo-Alarm output (–) | ALM– |
| | 38 | Servo-Ready output (–) | S-RDY– | 38 | Servo-Ready output (–) | S-RDY– |
| | 41 | Power supply for control signal (–) | COM– | 41 | Power supply for control signal (–) | COM– |
| 29 | 8 | CW over-travel inhibit input | CWL | 8 | CW over-travel inhibit input | CWL |
| 30 | 9 | CCW over-travel inhibit input | CCWL | 9 | CCW over-travel inhibit input | CCWL |
| 31 | 31 | Alarm clear input | A-CLR | 31 | Alarm clear input | A-CLR |
| 32 | 32 | Control mode switching input | C-MODE | 32 | Control mode switching input | C-MODE |
| 33 | 18 | CW direction torque limit input | CWTL | 18 | CW direction torque limit input | CWTL |
| 34 | 16 | CCW direction torque limit input | CCWTL | 14 | Torque command input | TRQR |
| 35 | 17 | Signal ground | GND | 17 | Signal ground | GND |
| 36 | 42 | Torque monitor output | IM | 42 | Torque monitor output | IM |

* “NC” is no connect.

# Replacing Old Model Servo Driver with MINAS A5Ⅱ, A5 series

| Pin No. on Old Model | DV0P4130 | | | DV0P4131 | | |
|---|---|---|---|---|---|---|
| | Pin No. on Current Model | Signal Name | Symbol | Pin No. on Current Model | Signal Name | Symbol |
| 1 | 8 | CW over-travel inhibit input | CWL | 8 | CW over-travel inhibit input | CWL |
| 2 | 9 | CCW over-travel inhibit input | CCWL | 9 | CCW over-travel inhibit input | CCWL |
| 3 | 3 | Command pulse input 2 | PULS1 | NC | | |
| 4 | 4 | Command pulse input 2 | PULS2 | NC | | |
| 5 | 5 | Command pulse sign input 2 | SIGN1 | NC | | |
| 6 | 6 | Command pulse sign input 2 | SIGN2 | NC | | |
| 7 | 7 | Power supply for control signal (+) | COM+ | 7 | Power supply for control signal (+) | COM+ |
| 8 | NC | | | NC | | |
| 9 | NC | | | NC | | |
| 10 | NC | | | NC | | |
| 11 | 11 | External brake release signal | BRK-OFF+ | 11 | External brake release signal | BRK-OFF+ |
| 12 | 12 | Zero-speed detection output signal | ZSP | 12 | Zero-speed detection output signal | ZSP |
| 13 | 13 | Torque in-limit signal output | TLC | 13 | Torque in-limit signal output | TLC |
| 14 | NC | | | 14 | Speed command input | SPR |
| 15 | 15 | Signal ground | GND | 15 | Signal ground | GND |
| 16 | 16 | CCW direction torque limit input | CCWTL | 16 | CCW direction torque limit input | CCWTL |
| 17 | 17 | Signal ground | GND | 17 | Signal ground | GND |
| 18 | 18 | CW direction torque limit input | CWTL | 18 | CW direction torque limit input | CWTL |
| 19 | 19 | Z-phase output | CZ | 19 | Z-phase output | CZ |
| 20 | NC | | | NC | | |
| 21 | 21 | A-phase output | OA+ | 21 | A-phase output | OA+ |
| 22 | 22 | A-phase output | OA- | 22 | A-phase output | OA- |
| 23 | 23 | Z-phase output | OZ+ | 23 | Z-phase output | OZ+ |
| 24 | 24 | Z-phase output | OZ- | 24 | Z-phase output | OZ- |
| 25 | 50 | Frame ground | FG | 50 | Frame ground | FG |
| 26 | 26 | Speed zero clamp input | ZEROSPD | 26 | Speed zero clamp input | ZEROSPD |
| 27 | 27 | Gain switching input | GAIN | 27 | Gain switching input | GAIN |
| 28 | NC | | | 33 | Selection 1 input of internal command speed | INTSPD1 |
| 29 | 29 | Servo-ON input | SRV-ON | 29 | Servo-ON input | SRV-ON |
| 30 | 30 | Deviation counter clear input | CL | NC | | |
| 31 | 31 | Alarm clear input | A-CLR | 31 | Alarm clear input | A-CLR |
| 32 | 32 | Control mode switching input | C-MODE | 32 | Control mode switching input | C-MODE |
| 33 | 33 | Command pulse inhibition input | INH | NC | | |
| 34 | NC | | | NC | | |
| 35 | 35 | Servo-Ready output | S-RDY+ | 35 | Servo-Ready output | S-RDY+ |
| 36 | NC | | | NC | | |
| 37 | 37 | Servo-Alarm output | ALM+ | 37 | Servo-Alarm output | ALM+ |
| 38 | NC | | | NC | | |
| 39 | 39 | Positioning complete output | COIN+ | 39 | Speed arrival output | AT-SPEED+ |
| 40 | 40 | Torque in-limit signal output | TLC | 40 | Torque in-limit signal output | TLC |
| 41 | 10 | External brake release signal (–) | BRK-OFF– | 10 | External brake release signal (–) | BRK-OFF– |
| | 34 | Positioning complete output (–) | COIN– | 34 | Speed arrival output (–) | AT-SPEED– |
| | 36 | Servo-Alarm output (–) | ALM– | 36 | Servo-Alarm output (–) | ALM– |
| | 38 | Servo-Ready output (–) | S-RDY– | 38 | Servo-Ready output (–) | S-RDY– |
| | 41 | Power supply for control signal (–) | COM– | 41 | Power supply for control signal (–) | COM– |
| 42 | 42 | Torque monitor output | IM | 42 | Torque monitor output | IM |
| 43 | 43 | Speed monitor output | SP | 43 | Speed monitor output | SP |
| 44 | 25 | Signal ground | GND | 25 | Signal ground | GND |
| 45 | 25 | Signal ground | GND | 25 | Signal ground | GND |
| 46 | 25 | Signal ground | GND | 25 | Signal ground | GND |
| 47 | NC | | | NC | | |
| 48 | 48 | B-phase output | OB+ | 48 | B-phase output | OB+ |
| 49 | 49 | B-phase output | OB– | 49 | B-phase output | OB– |
| 50 | 50 | Frame ground | FG | 50 | Frame ground | FG |

* “NC” is no connect.



| Pin No. on Old Model | DV0P4132 | | |
|---|---|---|---|
| | Pin No. on Current Model | Signal Name | Symbol |
| 1 | 8 | CW over-travel inhibit input | CWL |
| 2 | 9 | CCW over-travel inhibit input | CCWL |
| 3 | NC | | |
| 4 | NC | | |
| 5 | NC | | |
| 6 | NC | | |
| 7 | 7 | Power supply for control signal (+) | COM+ |
| 8 | NC | | |
| 9 | NC | | |
| 10 | NC | | |
| 11 | 11 | External brake release signal | BRK-OFF+ |
| 12 | 12 | Zero-speed detection output signal | ZSP |
| 13 | 13 | Torque in-limit signal output | TLC |
| 14 | NC | | |
| 15 | 15 | Signal ground | GND |
| 16 | 16 | Torque command input | TRQR |
| 17 | 17 | Signal ground | GND |
| 18 | 18 | CW direction torque limit input | CWTL |
| 19 | 19 | Z-phase output | CZ |
| 20 | NC | | |
| 21 | 21 | A-phase output | OA+ |
| 22 | 22 | A-phase output | OA- |
| 23 | 23 | Z-phase output | OZ+ |
| 24 | 24 | Z-phase output | OZ- |
| 25 | 50 | Frame ground | FG |
| 26 | 26 | Speed zero clamp input | ZEROSPD |
| 27 | 27 | Gain switching input | GAIN |
| 28 | NC | | |
| 29 | 29 | Servo-ON input | SRV-ON |
| 30 | NC | | |
| 31 | 31 | Alarm clear input | A-CLR |
| 32 | 32 | Control mode switching input | C-MODE |
| 33 | NC | | |
| 34 | NC | | |
| 35 | 35 | Servo-Ready output | S-RDY+ |
| 36 | NC | | |
| 37 | 37 | Servo-Alarm output | ALM+ |
| 38 | NC | | |
| 39 | 39 | Speed arrival output | AT-SPEED+ |
| 40 | 40 | Torque in-limit signal output | TLC |
| 41 | 10 | External brake release signal (–) | BRK-OFF– |
| | 34 | Speed arrival output (–) | AT-SPEED– |
| | 36 | Servo-Alarm output (–) | ALM– |
| | 38 | Servo-Ready output (–) | S-RDY– |
| | 41 | Power supply for control signal (–) | COM– |
| 42 | 42 | Torque monitor output | IM |
| 43 | 43 | Speed monitor output | SP |
| 44 | 25 | Signal ground | GND |
| 45 | 25 | Signal ground | GND |
| 46 | 25 | Signal ground | GND |
| 47 | NC | | |
| 48 | 48 | B-phase output | OB+ |
| 49 | 49 | B-phase output | OB– |
| 50 | 50 | Frame ground | FG |

* “NC” is no connect.

# Connection Between Driver and Controller

## FP7-AFP7PP02T/L(2-axes) AFP7PP04T/L(4-axes) Connection with the Panasonic devices SUNX.

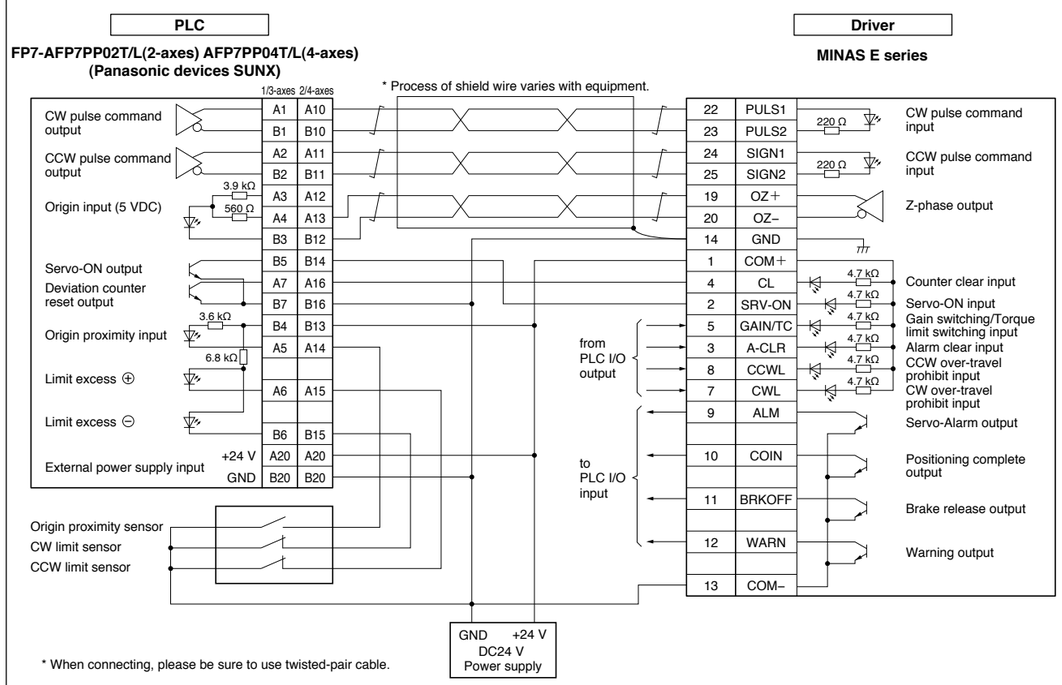


## FP2-PP2 AFP2430 Connection with the Panasonic devices SUNX.

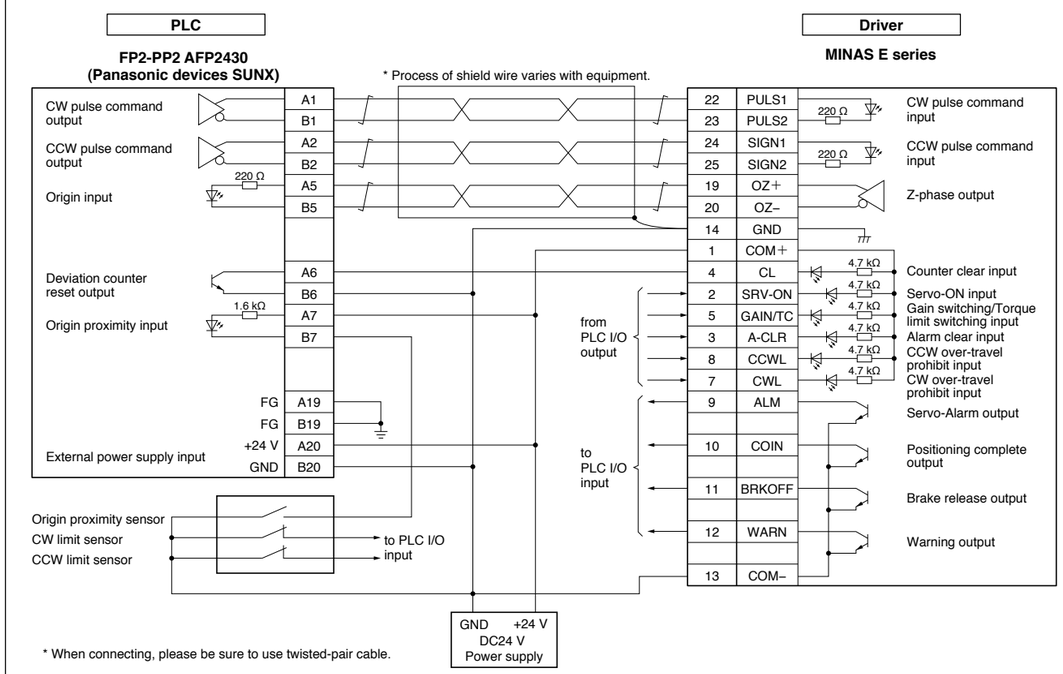


## FPG-PP12 AFPG432 Connection with the Panasonic devices SUNX.

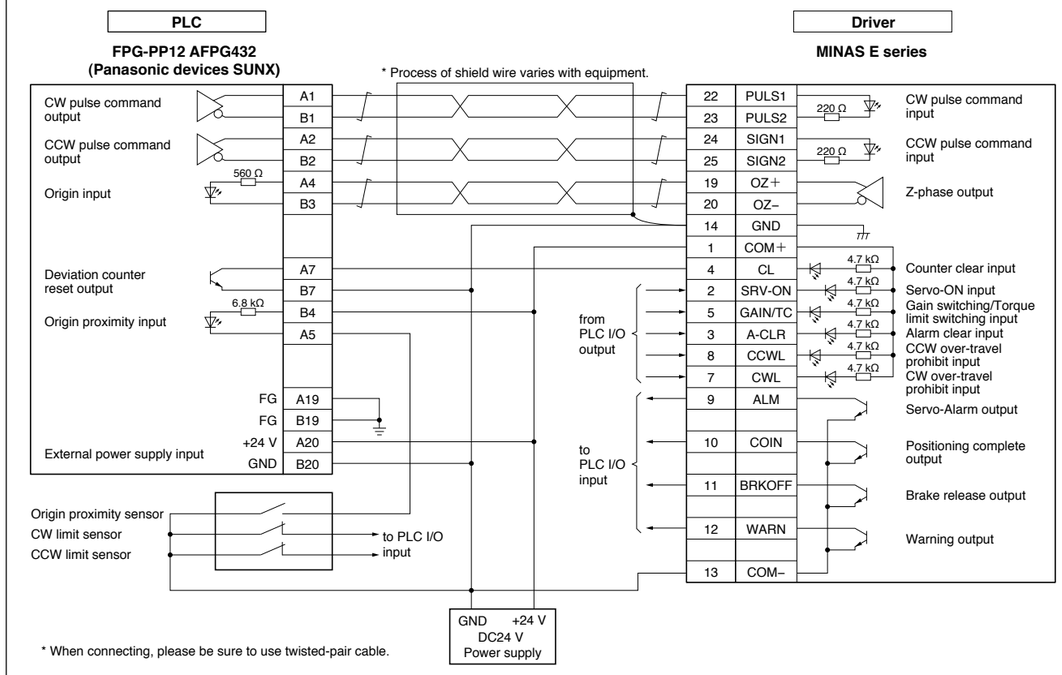


## FPG-C32T Connection with the Panasonic devices SUNX.

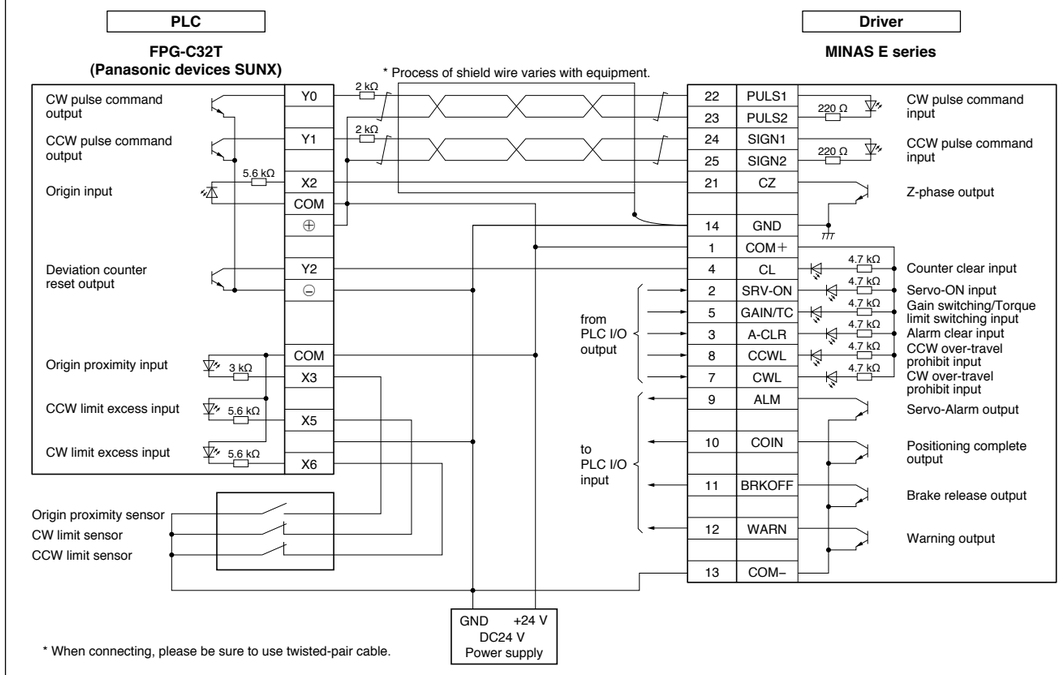

# Connection Between Driver and Controller

## F3YP22-0P/F3YP24-0P/F3YP28-0P Connection with the Yokogawa Electric Corp.

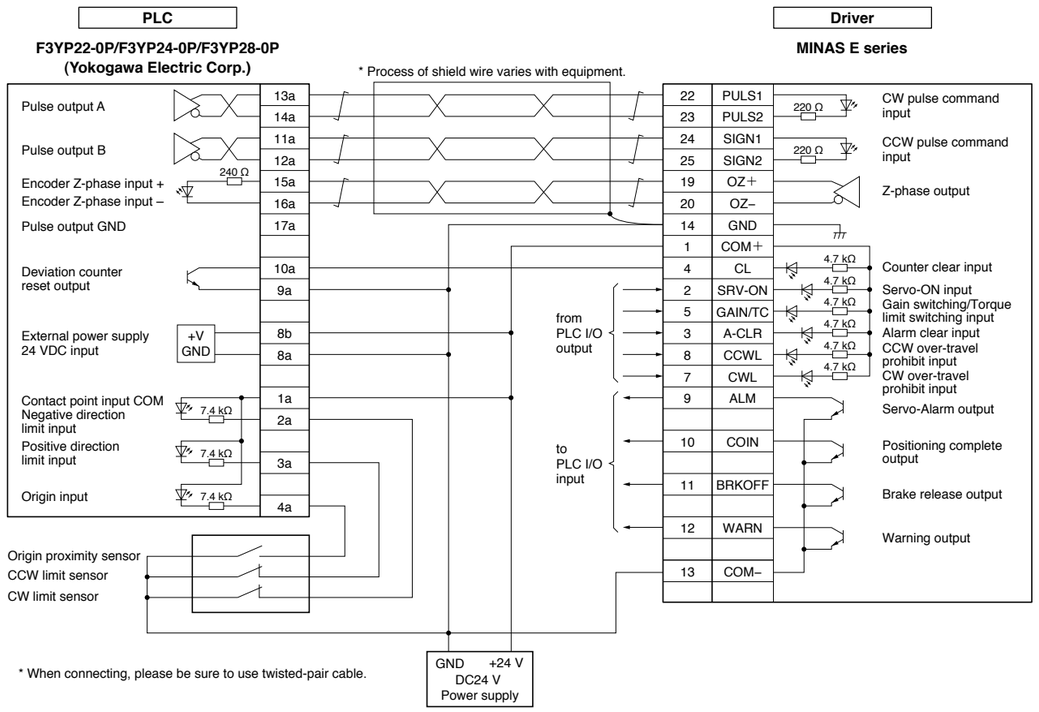


## CJ1W-NC113 Connection with the Omron Corp.

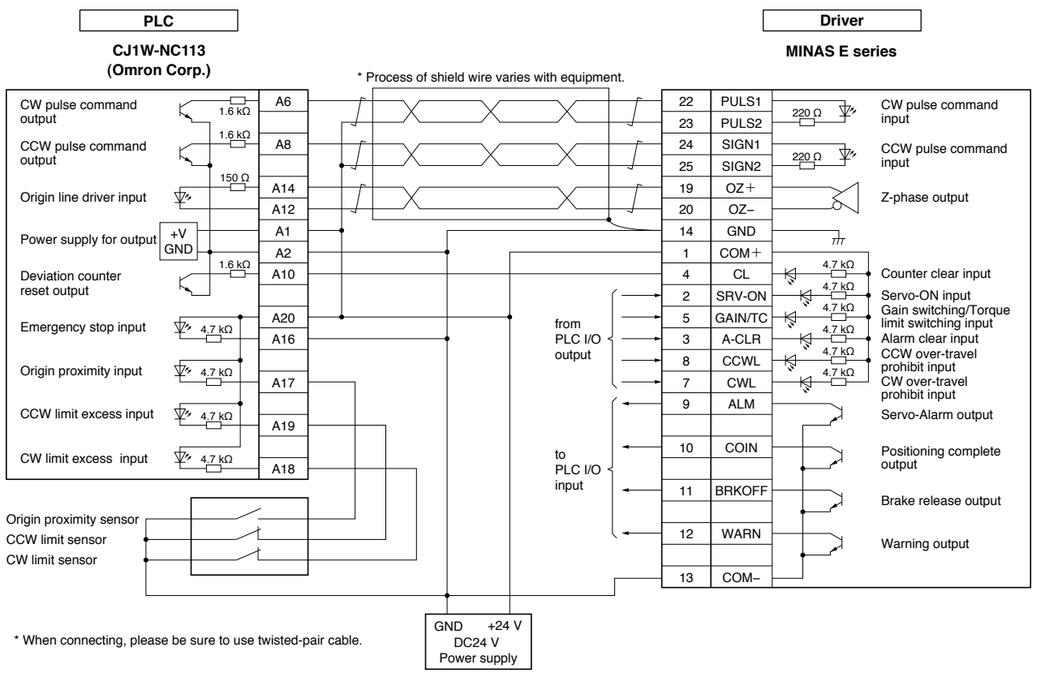


## F3NC32-ON/F3NC34-ON Connection with the Yokogawa Electric Corp.

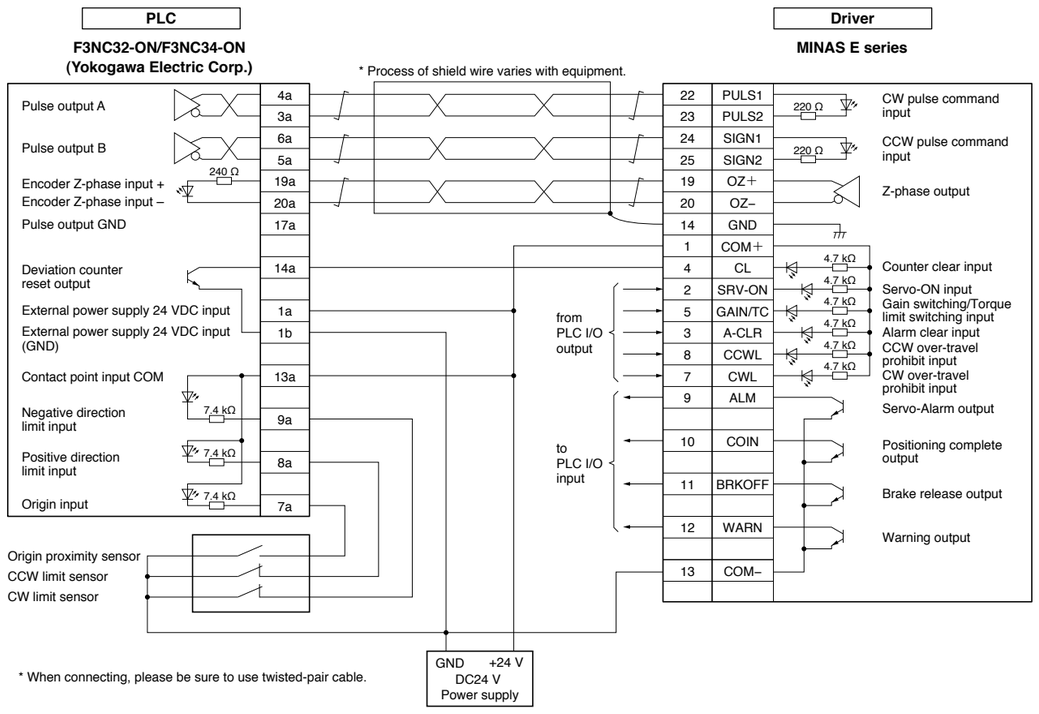


## CJ1W-NC133 Connection with the Omron Corp.

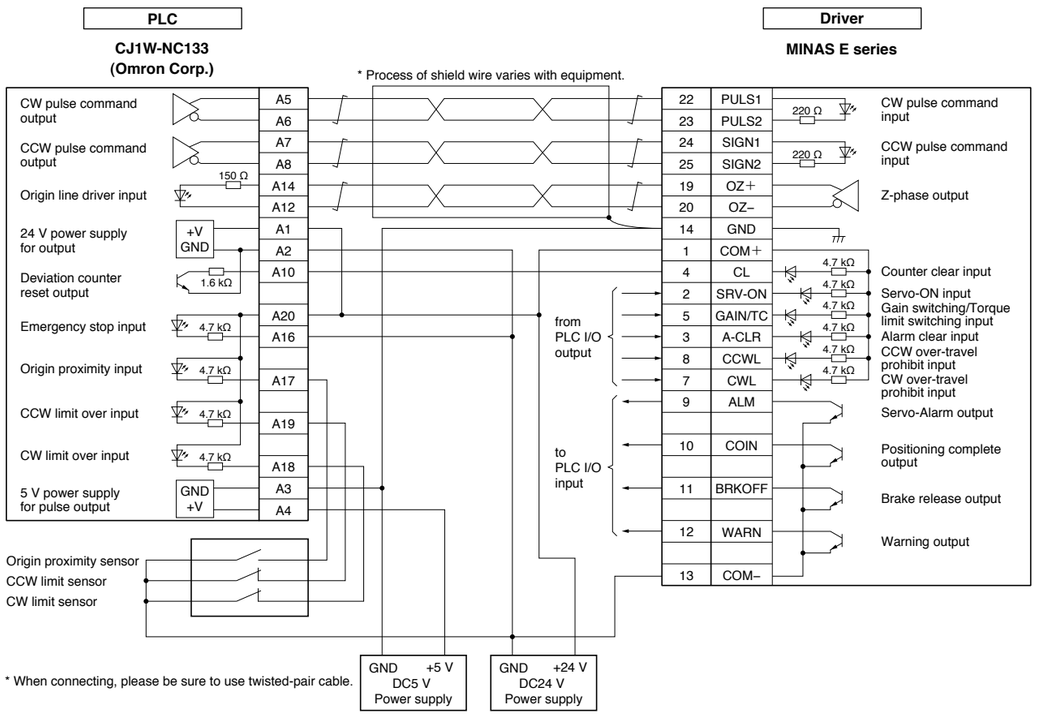

# Connection Between Driver and Controller

## QD75D1 Connection with the Mitsubishi Electric Corp.

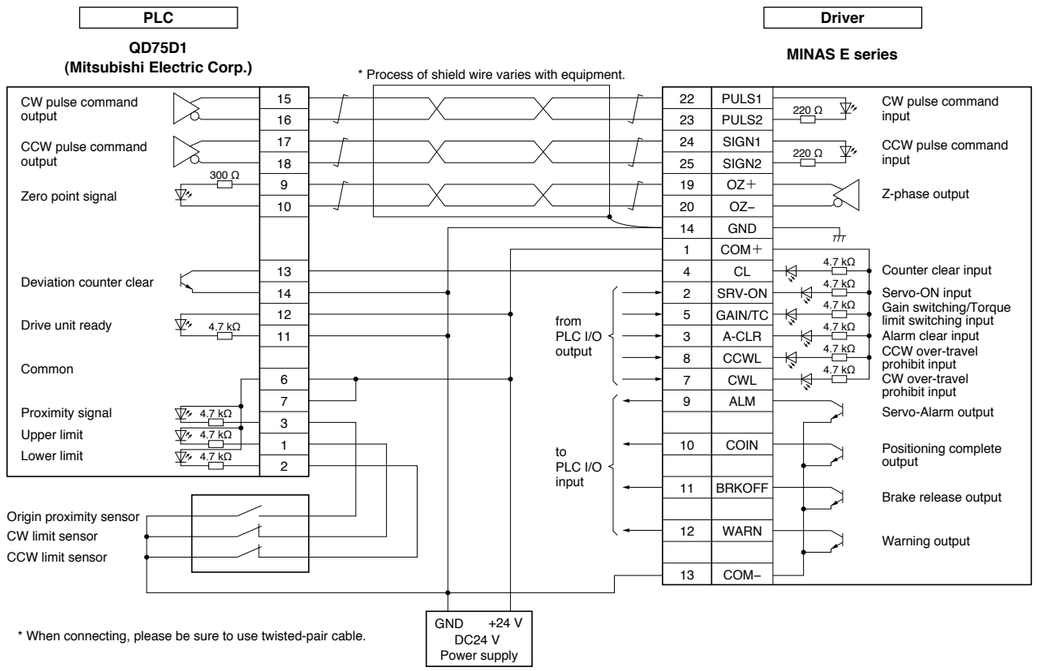







**DV0P**

| Part No. | Title | Page |
|---|---|---|
| DV0P0770 | Connector kit for external peripheral equipment | 240 |
| DV0P0800 | Interface cable | 241 |
| DV0P1450 | Surge absorber (3-phase) | 253,256 |
| DV0P1460 | Noise Filter for Signal Lines | 254,256 |
| DV0P1960 | Communication cable | 241 |
| DV0P220 | Reactor | 209 |
| DV0P221 | Reactor | 209 |
| DV0P222 | Reactor | 209 |
| DV0P223 | Reactor | 209 |
| DV0P224 | Reactor | 209 |
| DV0P225 | Reactor | 209 |
| DV0P227 | Reactor | 209 |
| DV0P228 | Reactor | 209 |
| DV0P2870 | Connector kit for power supply connection | 239 |
| DV0P2890 | External regenerative resistor | 242 |
| DV0P2891 | External regenerative resistor | 242 |
| DV0P2990 | Battery For Absolute Encoder | 207 |
| DV0P3410 | Noise Filter | 251 |
| DV0P3670 | Connector kit for motor/encoder connection | 239 |
| DV0P37300 | Cable set (3 m) | 238 |
| DV0P3811 | DIN rail mounting unit | 242 |
| DV0P39200 | Cable set (5 m) | 238 |
| DV0P4120 | Interface conversion cable | 197 |
| DV0P4121 | Interface conversion cable | 197 |
| DV0P4130 | Interface conversion cable | 197 |
| DV0P4131 | Interface conversion cable | 197 |
| DV0P4132 | Interface conversion cable | 197 |
| DV0P4160 | Noise filter | 256 |
| DV0P4170 | Noise Filter | 250 |
| DV0P4190 | Surge absorber (Single phase) | 253,256 |
| DV0P4220 | Noise Filter | 250 |
| DV0P4280 | External Regenerative Resistor: 50 Ω 25 W | 210 |
| DV0P4281 | External Regenerative Resistor: 100 Ω 25 W | 210 |
| DV0P4282 | External Regenerative Resistor: 25 Ω 50 W | 210 |
| DV0P4283 | External Regenerative Resistor: 50 Ω 50 W | 210 |
| DV0P4284 | External Regenerative Resistor: 30 Ω100 W | 210 |
| DV0P4285 | External Regenerative Resistor: 20 Ω130 W | 210 |
| DV0P4290 | Connector Kit for Motor/Encoder Connection | 202 |
| DV0P4310 | Connector Kit for Motor/Encoder Connection | 204 |
| DV0P4320 | Connector Kit for Motor/Encoder Connection | 204 |
| DV0P4330 | Connector Kit for Motor/Encoder Connection | 205 |
| DV0P4340 | Connector Kit for Motor/Encoder Connection | 205 |
| DV0P4350 | Interface Connector | 198 |
| DV0P4360 | Interface cable | 197 |
| DV0P4380 | Connector Kit for Motor/Encoder Connection | 202 |
| DV0P4420 | Console | 241 |
| DV0P4430 | Battery Box | 207 |
| DV0P4460 | Setup support software “PANATERM” for MINAS series AC servo motor & Driver | 236 |
| DV0PM20010 | Connector Kit: Encoder | 199 |
| DV0PM20024 | Connector Kit: RS485, 232 | 198 |
| DV0PM20025 | Connector Kit: Safety | 198 |
| DV0PM20026 | Connector Kit: External Scale | 199 |
| DV0PM20027 | Mounting bracket: A-frame | 208 |
| DV0PM20028 | Mounting bracket: B-frame | 208 |
| DV0PM20029 | Mounting bracket: C-frame | 208 |
| DV0PM20030 | Mounting bracket: D-frame | 208 |
| DV0PM20031 | Connector Kit: Analog Monitor Signal | 199 |
| DV0PM20032 | Connector for Power Supply Input Connection (A-frame to D-frame (Single row type)) | 200 |
| DV0PM20033 | Connector for Power Supply Input Connection (A-frame to D-frame (Double row type)) | 200 |
| DV0PM20034 | Connector for Motor Connection (A-frame to D-frame) | 201 |
| DV0PM20035 | Connector Kit for Motor/Encoder Connection | 203 |
| DV0PM20036 | Connector Kit for Motor/Encoder Connection | 203 |
| DV0PM20037 | Connector Kit for Motor/Encoder Connection | 204 |
| DV0PM20038 | Connector Kit for Motor/Encoder Connection | 204 |
| DV0PM20039 | Connector Kit for Motor/Encoder Connection | 205 |
| DV0PM20040 | Connector Kit for Motor/Brake Connection | 206 |
| DV0PM20042 | Noise Filter | 250 |
| DV0PM20043 | Noise Filter | 250 |

**DV0P**

| Part No. | Title | Page |
|---|---|---|
| DV0PM20044 | Connector for Power Supply Input Connection (E-frame) | 200 |
| DV0PM20045 | Connector for Regenerative Resistor (E-frame 200 V/400 V common) | 201 |
| DV0PM20046 | Connector for Motor Connection (E-frame 200 V/400 V common) | 201 |
| DV0PM20047 | Reactor | 209 |
| DV0PM20048 | External Regenerative Resistor: 120 Ω 240 W | 210 |
| DV0PM20049 | External Regenerative Resistor: 80 Ω 450 W | 210 |
| DV0PM20050 | Surge absorber (3-phase) | 253 |
| DV0PM20051 | Connector for Power Supply Input Connection (D-frame 400 V) | 200 |
| DV0PM20052 | Connector for Power Supply Input Connection (E-frame 400 V) | 200 |
| DV0PM20053 | Connector for Control Power Supply Input Connection (D-frame, E-frame 400 V) | 201 |
| DV0PM20054 | Connector for Motor Connection (D-frame 400V ) | 201 |
| DV0PM20055 | Connector for Regenerative Resistor (D-frame 400 V) | 201 |
| DV0PM20056 | Connector Kit for Motor/Encoder Connection | 206 |
| DV0PM20057 | Connector Kit for Motor/Encoder Connection | 206 |
| DV0PM20058 | External Regenerative Resistor: 3.3 Ω 780 W | 210 |
| DV0PM20059 | External Regenerative Resistor:13.3 Ω 1140 W | 210 |

**MADHT**

| Part No. | Title | Page |
|---|---|---|
| MADHT1105 | A5 series Driver: A-frame | 29,42 |
| MADHT1105E | A5E series Driver: A-frame | 31,42 |
| MADHT1107 | A5 series Driver: A-frame | 29,42 |
| MADHT1107E | A5E series Driver: A-frame | 31,42 |
| MADHT1505 | A5 series Driver: A-frame | 29,42 |
| MADHT1505E | A5E series Driver: A-frame | 31,42 |
| MADHT1507 | A5 series Driver: A-frame | 29,42 |
| MADHT1507E | A5E series Driver: A-frame | 31,42 |

**MADKT**

| Part No. | Title | Page |
|---|---|---|
| MADKT1105 | A5Ⅱ series Driver: A-frame | 29,42 |
| MADKT1105E | A5ⅡE series Driver: A-frame | 31,42 |
| MADKT1107 | A5Ⅱ series Driver: A-frame | 29,42 |
| MADKT1107E | A5ⅡE series Driver: A-frame | 31,42 |
| MADKT1505 | A5Ⅱ series Driver: A-frame | 29,42 |
| MADKT1505E | A5ⅡE series Driver: A-frame | 31,42 |
| MADKT1507 | A5Ⅱ series Driver: A-frame | 29,42 |
| MADKT1507E | A5ⅡE series Driver: A-frame | 31,42 |

**MBDHT**

| Part No. | Title | Page |
|---|---|---|
| MBDHT2110 | A5 series Driver: B-frame | 29,42 |
| MBDHT2110E | A5E series Driver: B-frame | 31,42 |
| MBDHT2510 | A5 series Driver: B-frame | 29,42 |
| MBDHT2510E | A5E series Driver: B-frame | 31,42 |

**MBDKT**

| Part No. | Title | Page |
|---|---|---|
| MBDKT2110 | A5Ⅱ series Driver: B-frame | 29,42 |
| MBDKT2110E | A5ⅡE series Driver: B-frame | 31,42 |
| MBDKT2510 | A5Ⅱ series Driver: B-frame | 29,42 |
| MBDKT2510E | A5ⅡE series Driver: B-frame | 31,42 |

**MCDHT**

| Part No. | Title | Page |
|---|---|---|
| MCDHT3120 | A5 series Driver: C-frame | 29,43 |
| MCDHT3120E | A5E series Driver: C-frame | 31,43 |
| MCDHT3520 | A5 series Driver: C-frame | 29,43 |
| MCDHT3520E | A5E series Driver: C-frame | 31,43 |

**MCDKT**

| Part No. | Title | Page |
|---|---|---|
| MCDKT3120 | A5Ⅱ series Driver: C-frame | 29,43 |
| MCDKT3120E | A5ⅡE series Driver: C-frame | 31,43 |

# Index
## (Alphabetical Order)


**MCDKT**

| Part No. | Title | Page |
|---|---|---|
| MCDKT3520 | A5Ⅱ series Driver: C-frame | 29,43 |
| MCDKT3520E | A5ⅡE series Driver: C-frame | 31,43 |

**MDDHT**

| Part No. | Title | Page |
|---|---|---|
| MDDHT2407 | A5 series Driver: D-frame | 29,44 |
| MDDHT2407E | A5E series Driver: D-frame | 31,44 |
| MDDHT2412 | A5 series Driver: D-frame | 29,44 |
| MDDHT2412E | A5E series Driver: D-frame | 31,44 |
| MDDHT3420 | A5 series Driver: D-frame | 29,44 |
| MDDHT3420E | A5E series Driver: D-frame | 31,44 |
| MDDHT3530 | A5 series Driver: D-frame | 29,44 |
| MDDHT3530E | A5E series Driver: D-frame | 31,44 |
| MDDHT5540 | A5 series Driver: D-frame | 29,44 |
| MDDHT5540E | A5E series Driver: D-frame | 31,44 |

**MDDKT**

| Part No. | Title | Page |
|---|---|---|
| MDDKT2407 | A5Ⅱ series Driver: D-frame | 29,44 |
| MDDKT2407E | A5ⅡE series Driver: D-frame | 31,44 |
| MDDKT2412 | A5Ⅱ series Driver: D-frame | 29,44 |
| MDDKT2412E | A5ⅡE series Driver: D-frame | 31,44 |
| MDDKT3420 | A5Ⅱ series Driver: D-frame | 29,44 |
| MDDKT3420E | A5ⅡE series Driver: D-frame | 31,44 |
| MDDKT3530 | A5Ⅱ series Driver: D-frame | 29,44 |
| MDDKT3530E | A5ⅡE series Driver: D-frame | 31,44 |
| MDDKT5540 | A5Ⅱ series Driver: D-frame | 29,44 |
| MDDKT5540E | A5ⅡE series Driver: D-frame | 31,44 |

**MDME (Middle inertia)**

| Part No. | Title | Page |
|---|---|---|
| MDME044G1C | MDME 400 W Incremental encoder | 111 |
| MDME044G1D | MDME 400 W Incremental encoder | 111 |
| MDME044G1G | MDME 400 W Incremental encoder | 111 |
| MDME044G1H | MDME 400 W Incremental encoder | 111 |
| MDME044GCC | MDME 400 W Incremental encoder | 111 |
| MDME044GCD | MDME 400 W Incremental encoder | 111 |
| MDME044GCG | MDME 400 W Incremental encoder | 111 |
| MDME044GCH | MDME 400 W Incremental encoder | 111 |
| MDME044S1C | MDME 400 W Absolute encoder | 111 |
| MDME044S1D | MDME 400 W Absolute encoder | 111 |
| MDME044S1G | MDME 400 W Absolute encoder | 111 |
| MDME044S1H | MDME 400 W Absolute encoder | 111 |
| MDME044SCC | MDME 400 W Absolute encoder | 111 |
| MDME044SCD | MDME 400 W Absolute encoder | 111 |
| MDME044SCG | MDME 400 W Absolute encoder | 111 |
| MDME044SCH | MDME 400 W Absolute encoder | 111 |
| MDME064G1C | MDME 600 W Incremental encoder | 112 |
| MDME064G1D | MDME 600 W Incremental encoder | 112 |
| MDME064G1G | MDME 600 W Incremental encoder | 112 |
| MDME064G1H | MDME 600 W Incremental encoder | 112 |
| MDME064GCC | MDME 600 W Incremental encoder | 112 |
| MDME064GCD | MDME 600 W Incremental encoder | 112 |
| MDME064GCG | MDME 600 W Incremental encoder | 112 |
| MDME064GCH | MDME 600 W Incremental encoder | 112 |
| MDME064S1C | MDME 600 W Absolute encoder | 112 |
| MDME064S1D | MDME 600 W Absolute encoder | 112 |
| MDME064S1G | MDME 600 W Absolute encoder | 112 |
| MDME064S1H | MDME 600 W Absolute encoder | 112 |
| MDME064SCC | MDME 600 W Absolute encoder | 112 |
| MDME064SCD | MDME 600 W Absolute encoder | 112 |
| MDME064SCG | MDME 600 W Absolute encoder | 112 |
| MDME064SCH | MDME 600 W Absolute encoder | 112 |
| MDME102G1C | MDME 1.0 kW Incremental encoder | 80 |
| MDME102G1D | MDME 1.0 kW Incremental encoder | 80 |
| MDME102G1G | MDME 1.0 kW Incremental encoder | 80 |
| MDME102G1H | MDME 1.0 kW Incremental encoder | 80 |
| MDME102GCC | MDME 1.0 kW Incremental encoder | 80 |
| MDME102GCCM | MDME 1.0 kW Incremental encoder | 164 |
| MDME102GCD | MDME 1.0 kW Incremental encoder | 80 |
| MDME102GCDM | MDME 1.0 kW Incremental encoder | 164 |
| MDME102GCG | MDME 1.0 kW Incremental encoder | 80 |

**MDME (Middle inertia)**

| Part No. | Title | Page |
|---|---|---|
| MDME102GCGM | MDME 1.0 kW Incremental encoder | 164 |
| MDME102GCH | MDME 1.0 kW Incremental encoder | 80 |
| MDME102GCHM | MDME 1.0 kW Incremental encoder | 164 |
| MDME102S1C | MDME 1.0 kW Absolute encoder | 80 |
| MDME102S1D | MDME 1.0 kW Absolute encoder | 80 |
| MDME102S1G | MDME 1.0 kW Absolute encoder | 80 |
| MDME102S1H | MDME 1.0 kW Absolute encoder | 80 |
| MDME102SCC | MDME 1.0 kW Absolute encoder | 80 |
| MDME102SCCM | MDME 1.0 kW Absolute encoder | 164 |
| MDME102SCD | MDME 1.0 kW Absolute encoder | 80 |
| MDME102SCDM | MDME 1.0 kW Absolute encoder | 164 |
| MDME102SCG | MDME 1.0 kW Absolute encoder | 80 |
| MDME102SCGM | MDME 1.0 kW Absolute encoder | 164 |
| MDME102SCH | MDME 1.0 kW Absolute encoder | 80 |
| MDME102SCHM | MDME 1.0 kW Absolute encoder | 164 |
| MDME104G1C | MDME 1.0 kW Incremental encoder | 113 |
| MDME104G1D | MDME 1.0 kW Incremental encoder | 113 |
| MDME104G1G | MDME 1.0 kW Incremental encoder | 113 |
| MDME104G1H | MDME 1.0 kW Incremental encoder | 113 |
| MDME104GCC | MDME 1.0 kW Incremental encoder | 113 |
| MDME104GCD | MDME 1.0 kW Incremental encoder | 113 |
| MDME104GCG | MDME 1.0 kW Incremental encoder | 113 |
| MDME104GCH | MDME 1.0 kW Incremental encoder | 113 |
| MDME104S1C | MDME 1.0 kW Absolute encoder | 113 |
| MDME104S1D | MDME 1.0 kW Absolute encoder | 113 |
| MDME104S1G | MDME 1.0 kW Absolute encoder | 113 |
| MDME104S1H | MDME 1.0 kW Absolute encoder | 113 |
| MDME104SCC | MDME 1.0 kW Absolute encoder | 113 |
| MDME104SCD | MDME 1.0 kW Absolute encoder | 113 |
| MDME104SCG | MDME 1.0 kW Absolute encoder | 113 |
| MDME104SCH | MDME 1.0 kW Absolute encoder | 113 |
| MDME152G1C | MDME 1.5 kW Incremental encoder | 81 |
| MDME152G1D | MDME 1.5 kW Incremental encoder | 81 |
| MDME152G1G | MDME 1.5 kW Incremental encoder | 81 |
| MDME152G1H | MDME 1.5 kW Incremental encoder | 81 |
| MDME152GCC | MDME 1.5 kW Incremental encoder | 81 |
| MDME152GCCM | MDME 1.5 kW Incremental encoder | 165 |
| MDME152GCD | MDME 1.5 kW Incremental encoder | 81 |
| MDME152GCDM | MDME 1.5 kW Incremental encoder | 165 |
| MDME152GCG | MDME 1.5 kW Incremental encoder | 81 |
| MDME152GCGM | MDME 1.5 kW Incremental encoder | 165 |
| MDME152GCH | MDME 1.5 kW Incremental encoder | 81 |
| MDME152GCHM | MDME 1.5 kW Incremental encoder | 165 |
| MDME152S1C | MDME 1.5 kW Absolute encoder | 81 |
| MDME152S1D | MDME 1.5 kW Absolute encoder | 81 |
| MDME152S1G | MDME 1.5 kW Absolute encoder | 81 |
| MDME152S1H | MDME 1.5 kW Absolute encoder | 81 |
| MDME152SCC | MDME 1.5 kW Absolute encoder | 81 |
| MDME152SCCM | MDME 1.5 kW Absolute encoder | 165 |
| MDME152SCD | MDME 1.5 kW Absolute encoder | 81 |
| MDME152SCDM | MDME 1.5 kW Absolute encoder | 165 |
| MDME152SCG | MDME 1.5 kW Absolute encoder | 81 |
| MDME152SCGM | MDME 1.5 kW Absolute encoder | 165 |
| MDME152SCH | MDME 1.5 kW Absolute encoder | 81 |
| MDME152SCHM | MDME 1.5 kW Absolute encoder | 165 |
| MDME154G1C | MDME 1.5 kW Incremental encoder | 114 |
| MDME154G1D | MDME 1.5 kW Incremental encoder | 114 |
| MDME154G1G | MDME 1.5 kW Incremental encoder | 114 |
| MDME154G1H | MDME 1.5 kW Incremental encoder | 114 |
| MDME154GCC | MDME 1.5 kW Incremental encoder | 114 |
| MDME154GCD | MDME 1.5 kW Incremental encoder | 114 |
| MDME154GCG | MDME 1.5 kW Incremental encoder | 114 |
| MDME154GCH | MDME 1.5 kW Incremental encoder | 114 |
| MDME154S1C | MDME 1.5 kW Absolute encoder | 114 |
| MDME154S1D | MDME 1.5 kW Absolute encoder | 114 |
| MDME154S1G | MDME 1.5 kW Absolute encoder | 114 |
| MDME154S1H | MDME 1.5 kW Absolute encoder | 114 |
| MDME154SCC | MDME 1.5 kW Absolute encoder | 114 |
| MDME154SCD | MDME 1.5 kW Absolute encoder | 114 |
| MDME154SCG | MDME 1.5 kW Absolute encoder | 114 |
| MDME154SCH | MDME 1.5 kW Absolute encoder | 114 |
| MDME202G1C | MDME 2.0 kW Incremental encoder | 82 |

**MDME (Middle inertia)**

| Part No. | Title | Page |
|---|---|---|
| MDME202G1D | MDME 2.0 kW Incremental encoder | 82 |
| MDME202G1G | MDME 2.0 kW Incremental encoder | 82 |
| MDME202G1H | MDME 2.0 kW Incremental encoder | 82 |
| MDME202GCC | MDME 2.0 kW Incremental encoder | 82 |
| MDME202GCCM | MDME 2.0 kW Incremental encoder | 166 |
| MDME202GCD | MDME 2.0 kW Incremental encoder | 82 |
| MDME202GCDM | MDME 2.0 kW Incremental encoder | 166 |
| MDME202GCG | MDME 2.0 kW Incremental encoder | 82 |
| MDME202GCGM | MDME 2.0 kW Incremental encoder | 166 |
| MDME202GCH | MDME 2.0 kW Incremental encoder | 82 |
| MDME202GCHM | MDME 2.0 kW Incremental encoder | 166 |
| MDME202S1C | MDME 2.0 kW Absolute encoder | 82 |
| MDME202S1D | MDME 2.0 kW Absolute encoder | 82 |
| MDME202S1G | MDME 2.0 kW Absolute encoder | 82 |
| MDME202S1H | MDME 2.0 kW Absolute encoder | 82 |
| MDME202SCC | MDME 2.0 kW Absolute encoder | 82 |
| MDME202SCCM | MDME 2.0 kW Absolute encoder | 166 |
| MDME202SCD | MDME 2.0 kW Absolute encoder | 82 |
| MDME202SCDM | MDME 2.0 kW Absolute encoder | 166 |
| MDME202SCG | MDME 2.0 kW Absolute encoder | 82 |
| MDME202SCGM | MDME 2.0 kW Absolute encoder | 166 |
| MDME202SCH | MDME 2.0 kW Absolute encoder | 82 |
| MDME202SCHM | MDME 2.0 kW Absolute encoder | 166 |
| MDME204G1C | MDME 2.0 kW Incremental encoder | 115 |
| MDME204G1D | MDME 2.0 kW Incremental encoder | 115 |
| MDME204G1G | MDME 2.0 kW Incremental encoder | 115 |
| MDME204G1H | MDME 2.0 kW Incremental encoder | 115 |
| MDME204GCC | MDME 2.0 kW Incremental encoder | 115 |
| MDME204GCD | MDME 2.0 kW Incremental encoder | 115 |
| MDME204GCG | MDME 2.0 kW Incremental encoder | 115 |
| MDME204GCH | MDME 2.0 kW Incremental encoder | 115 |
| MDME204S1C | MDME 2.0 kW Absolute encoder | 115 |
| MDME204S1D | MDME 2.0 kW Absolute encoder | 115 |
| MDME204S1G | MDME 2.0 kW Absolute encoder | 115 |
| MDME204S1H | MDME 2.0 kW Absolute encoder | 115 |
| MDME204SCC | MDME 2.0 kW Absolute encoder | 115 |
| MDME204SCD | MDME 2.0 kW Absolute encoder | 115 |
| MDME204SCG | MDME 2.0 kW Absolute encoder | 115 |
| MDME204SCH | MDME 2.0 kW Absolute encoder | 115 |
| MDME302G1C | MDME 3.0 kW Incremental encoder | 83 |
| MDME302G1D | MDME 3.0 kW Incremental encoder | 83 |
| MDME302G1G | MDME 3.0 kW Incremental encoder | 83 |
| MDME302G1H | MDME 3.0 kW Incremental encoder | 83 |
| MDME302GCC | MDME 3.0 kW Incremental encoder | 83 |
| MDME302GCCM | MDME 3.0 kW Incremental encoder | 167 |
| MDME302GCD | MDME 3.0 kW Incremental encoder | 83 |
| MDME302GCDM | MDME 3.0 kW Incremental encoder | 167 |
| MDME302GCG | MDME 3.0 kW Incremental encoder | 83 |
| MDME302GCGM | MDME 3.0 kW Incremental encoder | 167 |
| MDME302GCH | MDME 3.0 kW Incremental encoder | 83 |
| MDME302GCHM | MDME 3.0 kW Incremental encoder | 167 |
| MDME302S1C | MDME 3.0 kW Absolute encoder | 83 |
| MDME302S1D | MDME 3.0 kW Absolute encoder | 83 |
| MDME302S1G | MDME 3.0 kW Absolute encoder | 83 |
| MDME302S1H | MDME 3.0 kW Absolute encoder | 83 |
| MDME302SCC | MDME 3.0 kW Absolute encoder | 83 |
| MDME302SCCM | MDME 3.0 kW Absolute encoder | 167 |
| MDME302SCD | MDME 3.0 kW Absolute encoder | 83 |
| MDME302SCDM | MDME 3.0 kW Absolute encoder | 167 |
| MDME302SCG | MDME 3.0 kW Absolute encoder | 83 |
| MDME302SCGM | MDME 3.0 kW Absolute encoder | 167 |
| MDME302SCH | MDME 3.0 kW Absolute encoder | 83 |
| MDME302SCHM | MDME 3.0 kW Absolute encoder | 167 |
| MDME304G1C | MDME 3.0 kW Incremental encoder | 116 |
| MDME304G1D | MDME 3.0 kW Incremental encoder | 116 |
| MDME304G1G | MDME 3.0 kW Incremental encoder | 116 |
| MDME304G1H | MDME 3.0 kW Incremental encoder | 116 |
| MDME304GCC | MDME 3.0 kW Incremental encoder | 116 |
| MDME304GCD | MDME 3.0 kW Incremental encoder | 116 |
| MDME304GCG | MDME 3.0 kW Incremental encoder | 116 |
| MDME304GCH | MDME 3.0 kW Incremental encoder | 116 |
| MDME304S1C | MDME 3.0 kW Absolute encoder | 116 |

**MDME (Middle inertia)**

| Part No. | Title | Page |
|---|---|---|
| MDME304S1D | MDME 3.0 kW Absolute encoder | 116 |
| MDME304S1G | MDME 3.0 kW Absolute encoder | 116 |
| MDME304S1H | MDME 3.0 kW Absolute encoder | 116 |
| MDME304SCC | MDME 3.0 kW Absolute encoder | 116 |
| MDME304SCD | MDME 3.0 kW Absolute encoder | 116 |
| MDME304SCG | MDME 3.0 kW Absolute encoder | 116 |
| MDME304SCH | MDME 3.0 kW Absolute encoder | 116 |
| MDME402G1C | MDME 4.0 kW Incremental encoder | 84 |
| MDME402G1D | MDME 4.0 kW Incremental encoder | 84 |
| MDME402G1G | MDME 4.0 kW Incremental encoder | 84 |
| MDME402G1H | MDME 4.0 kW Incremental encoder | 84 |
| MDME402GCC | MDME 4.0 kW Incremental encoder | 84 |
| MDME402GCCM | MDME 4.0 kW Incremental encoder | 168 |
| MDME402GCD | MDME 4.0 kW Incremental encoder | 84 |
| MDME402GCDM | MDME 4.0 kW Incremental encoder | 168 |
| MDME402GCG | MDME 4.0 kW Incremental encoder | 84 |
| MDME402GCGM | MDME 4.0 kW Incremental encoder | 168 |
| MDME402GCH | MDME 4.0 kW Incremental encoder | 84 |
| MDME402GCHM | MDME 4.0 kW Incremental encoder | 168 |
| MDME402S1C | MDME 4.0 kW Absolute encoder | 84 |
| MDME402S1D | MDME 4.0 kW Absolute encoder | 84 |
| MDME402S1G | MDME 4.0 kW Absolute encoder | 84 |
| MDME402S1H | MDME 4.0 kW Absolute encoder | 84 |
| MDME402SCC | MDME 4.0 kW Absolute encoder | 84 |
| MDME402SCCM | MDME 4.0 kW Absolute encoder | 168 |
| MDME402SCD | MDME 4.0 kW Absolute encoder | 84 |
| MDME402SCDM | MDME 4.0 kW Absolute encoder | 168 |
| MDME402SCG | MDME 4.0 kW Absolute encoder | 84 |
| MDME402SCGM | MDME 4.0 kW Absolute encoder | 168 |
| MDME402SCH | MDME 4.0 kW Absolute encoder | 84 |
| MDME402SCHM | MDME 4.0 kW Absolute encoder | 168 |
| MDME404G1C | MDME 4.0 kW Incremental encoder | 117 |
| MDME404G1D | MDME 4.0 kW Incremental encoder | 117 |
| MDME404G1G | MDME 4.0 kW Incremental encoder | 117 |
| MDME404G1H | MDME 4.0 kW Incremental encoder | 117 |
| MDME404GCC | MDME 4.0 kW Incremental encoder | 117 |
| MDME404GCD | MDME 4.0 kW Incremental encoder | 117 |
| MDME404GCG | MDME 4.0 kW Incremental encoder | 117 |
| MDME404GCH | MDME 4.0 kW Incremental encoder | 117 |
| MDME404S1C | MDME 4.0 kW Absolute encoder | 117 |
| MDME404S1D | MDME 4.0 kW Absolute encoder | 117 |
| MDME404S1G | MDME 4.0 kW Absolute encoder | 117 |
| MDME404S1H | MDME 4.0 kW Absolute encoder | 117 |
| MDME404SCC | MDME 4.0 kW Absolute encoder | 117 |
| MDME404SCD | MDME 4.0 kW Absolute encoder | 117 |
| MDME404SCG | MDME 4.0 kW Absolute encoder | 117 |
| MDME404SCH | MDME 4.0 kW Absolute encoder | 117 |
| MDME502G1C | MDME 5.0 kW Incremental encoder | 85 |
| MDME502G1D | MDME 5.0 kW Incremental encoder | 85 |
| MDME502G1G | MDME 5.0 kW Incremental encoder | 85 |
| MDME502G1H | MDME 5.0 kW Incremental encoder | 85 |
| MDME502GCC | MDME 5.0 kW Incremental encoder | 85 |
| MDME502GCCM | MDME 5.0 kW Incremental encoder | 169 |
| MDME502GCD | MDME 5.0 kW Incremental encoder | 85 |
| MDME502GCDM | MDME 5.0 kW Incremental encoder | 169 |
| MDME502GCG | MDME 5.0 kW Incremental encoder | 85 |
| MDME502GCGM | MDME 5.0 kW Incremental encoder | 169 |
| MDME502GCH | MDME 5.0 kW Incremental encoder | 85 |
| MDME502GCHM | MDME 5.0 kW Incremental encoder | 169 |
| MDME502S1C | MDME 5.0 kW Absolute encoder | 85 |
| MDME502S1D | MDME 5.0 kW Absolute encoder | 85 |
| MDME502S1G | MDME 5.0 kW Absolute encoder | 85 |
| MDME502S1H | MDME 5.0 kW Absolute encoder | 85 |
| MDME502SCC | MDME 5.0 kW Absolute encoder | 85 |
| MDME502SCCM | MDME 5.0 kW Absolute encoder | 169 |
| MDME502SCD | MDME 5.0 kW Absolute encoder | 85 |
| MDME502SCDM | MDME 5.0 kW Absolute encoder | 169 |
| MDME502SCG | MDME 5.0 kW Absolute encoder | 85 |
| MDME502SCGM | MDME 5.0 kW Absolute encoder | 169 |
| MDME502SCH | MDME 5.0 kW Absolute encoder | 85 |
| MDME502SCHM | MDME 5.0 kW Absolute encoder | 169 |
| MDME504G1C | MDME 5.0 kW Incremental encoder | 118 |

# Index
## (Alphabetical Order)


**MDME (Middle inertia)**

| Part No. | Title | Page |
|---|---|---|
| MDME504G1D | MDME 5.0 kW Incremental encoder | 118 |
| MDME504G1G | MDME 5.0 kW Incremental encoder | 118 |
| MDME504G1H | MDME 5.0 kW Incremental encoder | 118 |
| MDME504GCC | MDME 5.0 kW Incremental encoder | 118 |
| MDME504GCD | MDME 5.0 kW Incremental encoder | 118 |
| MDME504GCG | MDME 5.0 kW Incremental encoder | 118 |
| MDME504GCH | MDME 5.0 kW Incremental encoder | 118 |
| MDME504S1C | MDME 5.0 kW Absolute encoder | 118 |
| MDME504S1D | MDME 5.0 kW Absolute encoder | 118 |
| MDME504S1G | MDME 5.0 kW Absolute encoder | 118 |
| MDME504S1H | MDME 5.0 kW Absolute encoder | 118 |
| MDME504SCC | MDME 5.0 kW Absolute encoder | 118 |
| MDME504SCD | MDME 5.0 kW Absolute encoder | 118 |
| MDME504SCG | MDME 5.0 kW Absolute encoder | 118 |
| MDME504SCH | MDME 5.0 kW Absolute encoder | 118 |
| MDME752G1C | MDME 7.5 kW Incremental encoder | 86 |
| MDME752G1D | MDME 7.5 kW Incremental encoder | 86 |
| MDME752G1G | MDME 7.5 kW Incremental encoder | 86 |
| MDME752G1H | MDME 7.5 kW Incremental encoder | 86 |
| MDME752S1C | MDME 7.5 kW Absolute encoder | 86 |
| MDME752S1D | MDME 7.5 kW Absolute encoder | 86 |
| MDME752S1G | MDME 7.5 kW Absolute encoder | 86 |
| MDME752S1H | MDME 7.5 kW Absolute encoder | 86 |
| MDME754G1C | MDME 7.5 kW Incremental encoder | 119 |
| MDME754G1D | MDME 7.5 kW Incremental encoder | 119 |
| MDME754G1G | MDME 7.5 kW Incremental encoder | 119 |
| MDME754G1H | MDME 7.5 kW Incremental encoder | 119 |
| MDME754S1C | MDME 7.5 kW Absolute encoder | 119 |
| MDME754S1D | MDME 7.5 kW Absolute encoder | 119 |
| MDME754S1G | MDME 7.5 kW Absolute encoder | 119 |
| MDME754S1H | MDME 7.5 kW Absolute encoder | 119 |
| MDMEC12G1C | MDME 11.0 kW Incremental encoder | 87 |
| MDMEC12G1D | MDME 11.0 kW Incremental encoder | 87 |
| MDMEC12G1G | MDME 11.0 kW Incremental encoder | 87 |
| MDMEC12G1H | MDME 11.0 kW Incremental encoder | 87 |
| MDMEC12S1C | MDME 11.0 kW Absolute encoder | 87 |
| MDMEC12S1D | MDME 11.0 kW Absolute encoder | 87 |
| MDMEC12S1G | MDME 11.0 kW Absolute encoder | 87 |
| MDMEC12S1H | MDME 11.0 kW Absolute encoder | 87 |
| MDMEC14G1C | MDME 11.0 kW Incremental encoder | 120 |
| MDMEC14G1D | MDME 11.0 kW Incremental encoder | 120 |
| MDMEC14G1G | MDME 11.0 kW Incremental encoder | 120 |
| MDMEC14G1H | MDME 11.0 kW Incremental encoder | 120 |
| MDMEC14S1C | MDME 11.0 kW Absolute encoder | 120 |
| MDMEC14S1D | MDME 11.0 kW Absolute encoder | 120 |
| MDMEC14S1G | MDME 11.0 kW Absolute encoder | 120 |
| MDMEC14S1H | MDME 11.0 kW Absolute encoder | 120 |
| MDMEC52G1C | MDME 15.0 kW Incremental encoder | 88 |
| MDMEC52G1D | MDME 15.0 kW Incremental encoder | 88 |
| MDMEC52G1G | MDME 15.0 kW Incremental encoder | 88 |
| MDMEC52G1H | MDME 15.0 kW Incremental encoder | 88 |
| MDMEC52S1C | MDME 15.0 kW Absolute encoder | 88 |
| MDMEC52S1D | MDME 15.0 kW Absolute encoder | 88 |
| MDMEC52S1G | MDME 15.0 kW Absolute encoder | 88 |
| MDMEC52S1H | MDME 15.0 kW Absolute encoder | 88 |
| MDMEC54G1C | MDME 15.0 kW Incremental encoder | 121 |
| MDMEC54G1D | MDME 15.0 kW Incremental encoder | 121 |
| MDMEC54G1G | MDME 15.0 kW Incremental encoder | 121 |
| MDMEC54G1H | MDME 15.0 kW Incremental encoder | 121 |
| MDMEC54S1C | MDME 15.0 kW Absolute encoder | 121 |
| MDMEC54S1D | MDME 15.0 kW Absolute encoder | 121 |
| MDMEC54S1G | MDME 15.0 kW Absolute encoder | 121 |
| MDMEC54S1H | MDME 15.0 kW Absolute encoder | 121 |

**MEDHT**

| Part No. | Title | Page |
|---|---|---|
| MEDHT4430 | A5 series Driver: E-frame | 29,45 |
| MEDHT4430E | A5E series Driver: E-frame | 31,45 |
| MEDHT7364 | A5 series Driver: E-frame | 29,44 |
| MEDHT7364E | A5E series Driver: E-frame | 31,44 |

**MEDKT**

| Part No. | Title | Page |
|---|---|---|
| MEDKT4430 | A5Ⅱ series Driver: E-frame | 29,45 |
| MEDKT4430E | A5ⅡE series Driver: E-frame | 31,45 |
| MEDKT7364 | A5Ⅱ series Driver: E-frame | 29,44 |
| MEDKT7364E | A5ⅡE series Driver: E-frame | 31,44 |

**MFDHT**

| Part No. | Title | Page |
|---|---|---|
| MFDHT5440 | A5 series Driver: F-frame | 29,45 |
| MFDHT5440E | A5E series Driver: F-frame | 31,45 |
| MFDHTA390 | A5 series Driver: F-frame | 29,45 |
| MFDHTA390E | A5E series Driver: F-frame | 31,45 |
| MFDHTA464 | A5 series Driver: F-frame | 29,45 |
| MFDHTA464E | A5E series Driver: F-frame | 31,45 |
| MFDHTB3A2 | A5 series Driver: F-frame | 29,45 |
| MFDHTB3A2E | A5E series Driver: F-frame | 31,45 |

**MFDKT**

| Part No. | Title | Page |
|---|---|---|
| MFDKT5440 | A5Ⅱ series Driver: F-frame | 29,45 |
| MFDKT5440E | A5ⅡE series Driver: F-frame | 31,45 |
| MFDKTA390 | A5Ⅱ series Driver: F-frame | 29,45 |
| MFDKTA390E | A5ⅡE series Driver: F-frame | 31,45 |
| MFDKTA464 | A5Ⅱ series Driver: F-frame | 29,45 |
| MFDKTA464E | A5ⅡE series Driver: F-frame | 31,45 |
| MFDKTB3A2 | A5Ⅱ series Driver: F-frame | 29,45 |
| MFDKTB3A2E | A5ⅡE series Driver: F-frame | 31,45 |

**MFECA**

| Part No. | Title | Page |
|---|---|---|
| MFECA0030EAD | Encoder Cable (without Battery Box) | 188 |
| MFECA0030EAE | Encoder Cable (with Battery Box) | 188 |
| MFECA0030EAM | Encoder Cable (without Battery Box) | 188,238 |
| MFECA0030ESD | Encoder Cable (without Battery Box) | 189 |
| MFECA0030ESE | Encoder Cable (with Battery Box) | 190 |
| MFECA0030ETD | Encoder Cable (without Battery Box) | 190 |
| MFECA0030ETE | Encoder Cable (with Battery Box) | 190 |
| MFECA0030MJD | Encoder Cable (without Battery Box) | 189 |
| MFECA0030MJE | Encoder Cable (with Battery Box) | 189 |
| MFECA0030MKD | Encoder Cable (without Battery Box) | 189 |
| MFECA0030MKE | Encoder Cable (with Battery Box) | 189 |
| MFECA0030TJD | Encoder Cable (without Battery Box) | 189 |
| MFECA0030TJE | Encoder Cable (with Battery Box) | 189 |
| MFECA0030TKD | Encoder Cable (without Battery Box) | 189 |
| MFECA0030TKE | Encoder Cable (with Battery Box) | 189 |
| MFECA0050EAD | Encoder Cable (without Battery Box) | 188 |
| MFECA0050EAE | Encoder Cable (with Battery Box) | 188 |
| MFECA0050EAM | Encoder Cable (without Battery Box) | 188,238 |
| MFECA0050ESD | Encoder Cable (without Battery Box) | 189 |
| MFECA0050ESE | Encoder Cable (with Battery Box) | 190 |
| MFECA0050ETD | Encoder Cable (without Battery Box) | 190 |
| MFECA0050ETE | Encoder Cable (with Battery Box) | 190 |
| MFECA0050MJD | Encoder Cable (without Battery Box) | 189 |
| MFECA0050MJE | Encoder Cable (with Battery Box) | 189 |
| MFECA0050MKD | Encoder Cable (without Battery Box) | 189 |
| MFECA0050MKE | Encoder Cable (with Battery Box) | 189 |
| MFECA0050TJD | Encoder Cable (without Battery Box) | 189 |
| MFECA0050TJE | Encoder Cable (with Battery Box) | 189 |
| MFECA0050TKD | Encoder Cable (without Battery Box) | 189 |
| MFECA0050TKE | Encoder Cable (with Battery Box) | 189 |
| MFECA0100EAD | Encoder Cable (without Battery Box) | 188 |
| MFECA0100EAE | Encoder Cable (with Battery Box) | 188 |
| MFECA0100EAM | Encoder Cable (without Battery Box) | 188,238 |
| MFECA0100ESD | Encoder Cable (without Battery Box) | 189 |
| MFECA0100ESE | Encoder Cable (with Battery Box) | 190 |
| MFECA0100ETD | Encoder Cable (without Battery Box) | 190 |
| MFECA0100ETE | Encoder Cable (with Battery Box) | 190 |
| MFECA0100MJD | Encoder Cable (without Battery Box) | 189 |
| MFECA0100MJE | Encoder Cable (with Battery Box) | 189 |
| MFECA0100MKD | Encoder Cable (without Battery Box) | 189 |
| MFECA0100MKE | Encoder Cable (with Battery Box) | 189 |
| MFECA0100TJD | Encoder Cable (without Battery Box) | 189 |
| MFECA0100TJE | Encoder Cable (with Battery Box) | 189 |





**MFECA**

| Part No. | Title | Page |
|---|---|---|
| MFECA0100TKD | Encoder Cable (without Battery Box) | 189 |
| MFECA0100TKE | Encoder Cable (with Battery Box) | 189 |
| MFECA0200EAD | Encoder Cable (without Battery Box) | 188 |
| MFECA0200EAE | Encoder Cable (with Battery Box) | 188 |
| MFECA0200EAM | Encoder Cable (without Battery Box) | 188,238 |
| MFECA0200ESD | Encoder Cable (without Battery Box) | 189 |
| MFECA0200ESE | Encoder Cable (with Battery Box) | 190 |
| MFECA0200ETD | Encoder Cable (without Battery Box) | 190 |
| MFECA0200ETE | Encoder Cable (with Battery Box) | 190 |
| MFECA0200MJD | Encoder Cable (without Battery Box) | 189 |
| MFECA0200MJE | Encoder Cable (with Battery Box) | 189 |
| MFECA0200MKD | Encoder Cable (without Battery Box) | 189 |
| MFECA0200MKE | Encoder Cable (with Battery Box) | 189 |
| MFECA0200TJD | Encoder Cable (without Battery Box) | 189 |
| MFECA0200TJE | Encoder Cable (with Battery Box) | 189 |
| MFECA0200TKD | Encoder Cable (without Battery Box) | 189 |
| MFECA0200TKE | Encoder Cable (with Battery Box) | 189 |

**MFMCA**

| Part No. | Title | Page |
|---|---|---|
| MFMCA0030AEB | Motor Cable | 238 |
| MFMCA0030EED | Motor Cable (without Brake) | 191 |
| MFMCA0030NJD | Motor Cable (without Brake) | 191 |
| MFMCA0030NKD | Motor Cable (without Brake) | 191 |
| MFMCA0030RJD | Motor Cable (without Brake) | 191 |
| MFMCA0030RKD | Motor Cable (without Brake) | 191 |
| MFMCA0032ECD | Motor Cable (without Brake) | 191 |
| MFMCA0032FCD | Motor Cable (with Brake) | 194 |
| MFMCA0033ECT | Motor Cable (without Brake) | 193 |
| MFMCA0033FCT | Motor Cable (with Brake) | 195 |
| MFMCA0050AEB | Motor Cable | 238 |
| MFMCA0050EED | Motor Cable (without Brake) | 191 |
| MFMCA0050NJD | Motor Cable (without Brake) | 191 |
| MFMCA0050NKD | Motor Cable (without Brake) | 191 |
| MFMCA0050RJD | Motor Cable (without Brake) | 191 |
| MFMCA0050RKD | Motor Cable (without Brake) | 191 |
| MFMCA0052ECD | Motor Cable (without Brake) | 191 |
| MFMCA0052FCD | Motor Cable (with Brake) | 194 |
| MFMCA0053ECT | Motor Cable (without Brake) | 193 |
| MFMCA0053FCT | Motor Cable (with Brake) | 195 |
| MFMCA0100AEB | Motor Cable | 238 |
| MFMCA0100EED | Motor Cable (without Brake) | 191 |
| MFMCA0100NJD | Motor Cable (without Brake) | 191 |
| MFMCA0100NKD | Motor Cable (without Brake) | 191 |
| MFMCA0100RJD | Motor Cable (without Brake) | 191 |
| MFMCA0100RKD | Motor Cable (without Brake) | 191 |
| MFMCA0102ECD | Motor Cable (without Brake) | 191 |
| MFMCA0102FCD | Motor Cable (with Brake) | 194 |
| MFMCA0103ECT | Motor Cable (without Brake) | 193 |
| MFMCA0103FCT | Motor Cable (with Brake) | 195 |
| MFMCA0200AEB | Motor Cable | 238 |
| MFMCA0200EED | Motor Cable (without Brake) | 191 |
| MFMCA0200NJD | Motor Cable (without Brake) | 191 |
| MFMCA0200NKD | Motor Cable (without Brake) | 191 |
| MFMCA0200RJD | Motor Cable (without Brake) | 191 |
| MFMCA0200RKD | Motor Cable (without Brake) | 191 |
| MFMCA0202ECD | Motor Cable (without Brake) | 191 |
| MFMCA0202FCD | Motor Cable (with Brake) | 194 |
| MFMCA0203ECT | Motor Cable (without Brake) | 193 |
| MFMCA0203FCT | Motor Cable (with Brake) | 195 |

**MFMCB**

| Part No. | Title | Page |
|---|---|---|
| MFMCB0030GET | Brake Cable | 196,238 |
| MFMCB0030PJT | Brake Cable | 196 |
| MFMCB0030PKT | Brake Cable | 196 |
| MFMCB0030SJT | Brake Cable | 196 |
| MFMCB0030SKT | Brake Cable | 196 |
| MFMCB0050GET | Brake Cable | 196,238 |
| MFMCB0050PJT | Brake Cable | 196 |
| MFMCB0050PKT | Brake Cable | 196 |
| MFMCB0050SJT | Brake Cable | 196 |

**MFMCB**

| Part No. | Title | Page |
|---|---|---|
| MFMCB0050SKT | Brake Cable | 196 |
| MFMCB0100GET | Brake Cable | 196,238 |
| MFMCB0100PJT | Brake Cable | 196 |
| MFMCB0100PKT | Brake Cable | 196 |
| MFMCB0100SJT | Brake Cable | 196 |
| MFMCB0100SKT | Brake Cable | 196 |
| MFMCB0200GET | Brake Cable | 196,238 |
| MFMCB0200PJT | Brake Cable | 196 |
| MFMCB0200PKT | Brake Cable | 196 |
| MFMCB0200SJT | Brake Cable | 196 |
| MFMCB0200SKT | Brake Cable | 196 |

**MFMCD**

| Part No. | Title | Page |
|---|---|---|
| MFMCD0032ECD | Motor Cable (without Brake) | 192 |
| MFMCD0033ECT | Motor Cable (without Brake) | 193 |
| MFMCD0052ECD | Motor Cable (without Brake) | 192 |
| MFMCD0053ECT | Motor Cable (without Brake) | 193 |
| MFMCD0102ECD | Motor Cable (without Brake) | 192 |
| MFMCD0103ECT | Motor Cable (without Brake) | 193 |
| MFMCD0202ECD | Motor Cable (without Brake) | 192 |
| MFMCD0203ECT | Motor Cable (without Brake) | 193 |

**MFMCE**

| Part No. | Title | Page |
|---|---|---|
| MFMCE0032ECD | Motor Cable (without Brake) | 192 |
| MFMCE0032FCD | Motor Cable (with Brake) | 194 |
| MFMCE0052ECD | Motor Cable (without Brake) | 192 |
| MFMCE0052FCD | Motor Cable (with Brake) | 194 |
| MFMCE0102ECD | Motor Cable (without Brake) | 192 |
| MFMCE0102FCD | Motor Cable (with Brake) | 194 |
| MFMCE0202ECD | Motor Cable (without Brake) | 192 |
| MFMCE0202FCD | Motor Cable (with Brake) | 194 |

**MFMCF**

| Part No. | Title | Page |
|---|---|---|
| MFMCF0032ECD | Motor Cable (without Brake) | 192 |
| MFMCF0052ECD | Motor Cable (without Brake) | 192 |
| MFMCF0102ECD | Motor Cable (without Brake) | 192 |
| MFMCF0202ECD | Motor Cable (without Brake) | 192 |

**MFME (Middle inertia)**

| Part No. | Title | Page |
|---|---|---|
| MFME152G1C | MFME 1.5 kW Incremental encoder | 89 |
| MFME152G1D | MFME 1.5 kW Incremental encoder | 89 |
| MFME152G1G | MFME 1.5 kW Incremental encoder | 89 |
| MFME152G1H | MFME 1.5 kW Incremental encoder | 89 |
| MFME152S1C | MFME 1.5 kW Absolute encoder | 89 |
| MFME152S1D | MFME 1.5 kW Absolute encoder | 89 |
| MFME152S1G | MFME 1.5 kW Absolute encoder | 89 |
| MFME152S1H | MFME 1.5 kW Absolute encoder | 89 |
| MFME154G1C | MFME 1.5 kW Incremental encoder | 122 |
| MFME154G1D | MFME 1.5 kW Incremental encoder | 122 |
| MFME154G1G | MFME 1.5 kW Incremental encoder | 122 |
| MFME154G1H | MFME 1.5 kW Incremental encoder | 122 |
| MFME154S1C | MFME 1.5 kW Absolute encoder | 122 |
| MFME154S1D | MFME 1.5 kW Absolute encoder | 122 |
| MFME154S1G | MFME 1.5 kW Absolute encoder | 122 |
| MFME154S1H | MFME 1.5 kW Absolute encoder | 122 |
| MFME252G1C | MFME 2.5 kW Incremental encoder | 90 |
| MFME252G1D | MFME 2.5 kW Incremental encoder | 90 |
| MFME252G1G | MFME 2.5 kW Incremental encoder | 90 |
| MFME252G1H | MFME 2.5 kW Incremental encoder | 90 |
| MFME252S1C | MFME 2.5 kW Absolute encoder | 90 |
| MFME252S1D | MFME 2.5 kW Absolute encoder | 90 |
| MFME252S1G | MFME 2.5 kW Absolute encoder | 90 |
| MFME252S1H | MFME 2.5 kW Absolute encoder | 90 |
| MFME254G1C | MFME 2.5 kW Incremental encoder | 123 |
| MFME254G1D | MFME 2.5 kW Incremental encoder | 123 |
| MFME254G1G | MFME 2.5 kW Incremental encoder | 123 |
| MFME254G1H | MFME 2.5 kW Incremental encoder | 123 |
| MFME254S1C | MFME 2.5 kW Absolute encoder | 123 |

# Index
## (Alphabetical Order)


**MFME (Middle inertia)**

| Part No. | Title | Page |
|---|---|---|
| MFME254S1D | MFME 2.5 kW Absolute encoder | 123 |
| MFME254S1G | MFME 2.5 kW Absolute encoder | 123 |
| MFME254S1H | MFME 2.5 kW Absolute encoder | 123 |
| MFME452G1C | MFME 4.5 kW Incremental encoder | 91 |
| MFME452G1D | MFME 4.5 kW Incremental encoder | 91 |
| MFME452G1G | MFME 4.5 kW Incremental encoder | 91 |
| MFME452G1H | MFME 4.5 kW Incremental encoder | 91 |
| MFME452S1C | MFME 4.5 kW Absolute encoder | 91 |
| MFME452S1D | MFME 4.5 kW Absolute encoder | 91 |
| MFME452S1G | MFME 4.5 kW Absolute encoder | 91 |
| MFME452S1H | MFME 4.5 kW Absolute encoder | 91 |
| MFME454G1C | MFME 4.5 kW Incremental encoder | 124 |
| MFME454G1D | MFME 4.5 kW Incremental encoder | 124 |
| MFME454G1G | MFME 4.5 kW Incremental encoder | 124 |
| MFME454G1H | MFME 4.5 kW Incremental encoder | 124 |
| MFME454S1C | MFME 4.5 kW Absolute encoder | 124 |
| MFME454S1D | MFME 4.5 kW Absolute encoder | 124 |
| MFME454S1G | MFME 4.5 kW Absolute encoder | 124 |
| MFME454S1H | MFME 4.5 kW Absolute encoder | 124 |

**MGDHT**

| Part No. | Title | Page |
|---|---|---|
| MGDHTB4A2 | A5 series Driver: G-frame | 29,46 |
| MGDHTC3B4 | A5 series Driver: G-frame | 29,46 |

**MGDKT**

| Part No. | Title | Page |
|---|---|---|
| MGDKTB4A2 | A5Ⅱ series Driver: G-frame | 29,46 |
| MGDKTC3B4 | A5Ⅱ series Driver: G-frame | 29,46 |

**MGME (Middle inertia)**

| Part No. | Title | Page |
|---|---|---|
| MGME092G1C | MGME 0.9 kW Incremental encoder | 92 |
| MGME092G1D | MGME 0.9 kW Incremental encoder | 92 |
| MGME092G1G | MGME 0.9 kW Incremental encoder | 92 |
| MGME092G1H | MGME 0.9 kW Incremental encoder | 92 |
| MGME092GCC | MGME 0.9 kW Incremental encoder | 92 |
| MGME092GCCM | MGME 0.9 kW Incremental encoder | 170 |
| MGME092GCD | MGME 0.9 kW Incremental encoder | 92 |
| MGME092GCDM | MGME 0.9 kW Incremental encoder | 170 |
| MGME092GCG | MGME 0.9 kW Incremental encoder | 92 |
| MGME092GCGM | MGME 0.9 kW Incremental encoder | 170 |
| MGME092GCH | MGME 0.9 kW Incremental encoder | 92 |
| MGME092GCHM | MGME 0.9 kW Incremental encoder | 170 |
| MGME092S1C | MGME 0.9 kW Absolute encoder | 92 |
| MGME092S1D | MGME 0.9 kW Absolute encoder | 92 |
| MGME092S1G | MGME 0.9 kW Absolute encoder | 92 |
| MGME092S1H | MGME 0.9 kW Absolute encoder | 92 |
| MGME092SCC | MGME 0.9 kW Absolute encoder | 92 |
| MGME092SCCM | MGME 0.9 kW Absolute encoder | 170 |
| MGME092SCD | MGME 0.9 kW Absolute encoder | 92 |
| MGME092SCDM | MGME 0.9 kW Absolute encoder | 170 |
| MGME092SCG | MGME 0.9 kW Absolute encoder | 92 |
| MGME092SCGM | MGME 0.9 kW Absolute encoder | 170 |
| MGME092SCH | MGME 0.9 kW Absolute encoder | 92 |
| MGME092SCHM | MGME 0.9 kW Absolute encoder | 170 |
| MGME094G1C | MGME 0.9 kW Incremental encoder | 125 |
| MGME094G1D | MGME 0.9 kW Incremental encoder | 125 |
| MGME094G1G | MGME 0.9 kW Incremental encoder | 125 |
| MGME094G1H | MGME 0.9 kW Incremental encoder | 125 |
| MGME094GCC | MGME 0.9 kW Incremental encoder | 125 |
| MGME094GCD | MGME 0.9 kW Incremental encoder | 125 |
| MGME094GCG | MGME 0.9 kW Incremental encoder | 125 |
| MGME094GCH | MGME 0.9 kW Incremental encoder | 125 |
| MGME094S1C | MGME 0.9 kW Absolute encoder | 125 |
| MGME094S1D | MGME 0.9 kW Absolute encoder | 125 |
| MGME094S1G | MGME 0.9 kW Absolute encoder | 125 |
| MGME094S1H | MGME 0.9 kW Absolute encoder | 125 |
| MGME094SCC | MGME 0.9 kW Absolute encoder | 125 |
| MGME094SCD | MGME 0.9 kW Absolute encoder | 125 |
| MGME094SCG | MGME 0.9 kW Absolute encoder | 125 |
| MGME094SCH | MGME 0.9 kW Absolute encoder | 125 |

**MGME (Middle inertia)**

| Part No. | Title | Page |
|---|---|---|
| MGME202G1C | MGME 2.0 kW Incremental encoder | 93 |
| MGME202G1D | MGME 2.0 kW Incremental encoder | 93 |
| MGME202G1G | MGME 2.0 kW Incremental encoder | 93 |
| MGME202G1H | MGME 2.0 kW Incremental encoder | 93 |
| MGME202GCC | MGME 2.0 kW Incremental encoder | 93 |
| MGME202GCCM | MGME 2.0 kW Incremental encoder | 171 |
| MGME202GCD | MGME 2.0 kW Incremental encoder | 93 |
| MGME202GCDM | MGME 2.0 kW Incremental encoder | 171 |
| MGME202GCG | MGME 2.0 kW Incremental encoder | 93 |
| MGME202GCGM | MGME 2.0 kW Incremental encoder | 171 |
| MGME202GCH | MGME 2.0 kW Incremental encoder | 93 |
| MGME202GCHM | MGME 2.0 kW Incremental encoder | 171 |
| MGME202S1C | MGME 2.0 kW Absolute encoder | 93 |
| MGME202S1D | MGME 2.0 kW Absolute encoder | 93 |
| MGME202S1G | MGME 2.0 kW Absolute encoder | 93 |
| MGME202S1H | MGME 2.0 kW Absolute encoder | 93 |
| MGME202SCC | MGME 2.0 kW Absolute encoder | 93 |
| MGME202SCCM | MGME 2.0 kW Absolute encoder | 171 |
| MGME202SCD | MGME 2.0 kW Absolute encoder | 93 |
| MGME202SCDM | MGME 2.0 kW Absolute encoder | 171 |
| MGME202SCG | MGME 2.0 kW Absolute encoder | 93 |
| MGME202SCGM | MGME 2.0 kW Absolute encoder | 171 |
| MGME202SCH | MGME 2.0 kW Absolute encoder | 93 |
| MGME202SCHM | MGME 2.0 kW Absolute encoder | 171 |
| MGME204G1C | MGME 2.0 kW Incremental encoder | 126 |
| MGME204G1D | MGME 2.0 kW Incremental encoder | 126 |
| MGME204G1G | MGME 2.0 kW Incremental encoder | 126 |
| MGME204G1H | MGME 2.0 kW Incremental encoder | 126 |
| MGME204GCC | MGME 2.0 kW Incremental encoder | 126 |
| MGME204GCD | MGME 2.0 kW Incremental encoder | 126 |
| MGME204GCG | MGME 2.0 kW Incremental encoder | 126 |
| MGME204GCH | MGME 2.0 kW Incremental encoder | 126 |
| MGME204S1C | MGME 2.0 kW Absolute encoder | 126 |
| MGME204S1D | MGME 2.0 kW Absolute encoder | 126 |
| MGME204S1G | MGME 2.0 kW Absolute encoder | 126 |
| MGME204S1H | MGME 2.0 kW Absolute encoder | 126 |
| MGME204SCC | MGME 2.0 kW Absolute encoder | 126 |
| MGME204SCD | MGME 2.0 kW Absolute encoder | 126 |
| MGME204SCG | MGME 2.0 kW Absolute encoder | 126 |
| MGME204SCH | MGME 2.0 kW Absolute encoder | 126 |
| MGME302G1C | MGME 3.0 kW Incremental encoder | 94 |
| MGME302G1D | MGME 3.0 kW Incremental encoder | 94 |
| MGME302G1G | MGME 3.0 kW Incremental encoder | 94 |
| MGME302G1H | MGME 3.0 kW Incremental encoder | 94 |
| MGME302GCC | MGME 3.0 kW Incremental encoder | 94 |
| MGME302GCCM | MGME 3.0 kW Incremental encoder | 172 |
| MGME302GCD | MGME 3.0 kW Incremental encoder | 94 |
| MGME302GCDM | MGME 3.0 kW Incremental encoder | 172 |
| MGME302GCG | MGME 3.0 kW Incremental encoder | 94 |
| MGME302GCGM | MGME 3.0 kW Incremental encoder | 172 |
| MGME302GCH | MGME 3.0 kW Incremental encoder | 94 |
| MGME302GCHM | MGME 3.0 kW Incremental encoder | 172 |
| MGME302S1C | MGME 3.0 kW Absolute encoder | 94 |
| MGME302S1D | MGME 3.0 kW Absolute encoder | 94 |
| MGME302S1G | MGME 3.0 kW Absolute encoder | 94 |
| MGME302S1H | MGME 3.0 kW Absolute encoder | 94 |
| MGME302SCC | MGME 3.0 kW Absolute encoder | 94 |
| MGME302SCCM | MGME 3.0 kW Absolute encoder | 172 |
| MGME302SCD | MGME 3.0 kW Absolute encoder | 94 |
| MGME302SCDM | MGME 3.0 kW Absolute encoder | 172 |
| MGME302SCG | MGME 3.0 kW Absolute encoder | 94 |
| MGME302SCGM | MGME 3.0 kW Absolute encoder | 172 |
| MGME302SCH | MGME 3.0 kW Absolute encoder | 94 |
| MGME302SCHM | MGME 3.0 kW Absolute encoder | 172 |
| MGME304G1C | MGME 3.0 kW Incremental encoder | 127 |
| MGME304G1D | MGME 3.0 kW Incremental encoder | 127 |
| MGME304G1G | MGME 3.0 kW Incremental encoder | 127 |
| MGME304G1H | MGME 3.0 kW Incremental encoder | 127 |
| MGME304GCC | MGME 3.0 kW Incremental encoder | 127 |
| MGME304GCD | MGME 3.0 kW Incremental encoder | 127 |
| MGME304GCG | MGME 3.0 kW Incremental encoder | 127 |
| MGME304GCH | MGME 3.0 kW Incremental encoder | 127 |





**MGME (Middle inertia)**

| Part No. | Title | Page |
|---|---|---|
| MGME304S1C | MGME 3.0 kW Absolute encoder | 127 |
| MGME304S1D | MGME 3.0 kW Absolute encoder | 127 |
| MGME304S1G | MGME 3.0 kW Absolute encoder | 127 |
| MGME304S1H | MGME 3.0 kW Absolute encoder | 127 |
| MGME304SCC | MGME 3.0 kW Absolute encoder | 127 |
| MGME304SCD | MGME 3.0 kW Absolute encoder | 127 |
| MGME304SCG | MGME 3.0 kW Absolute encoder | 127 |
| MGME304SCH | MGME 3.0 kW Absolute encoder | 127 |
| MGME452G1C | MGME 4.5 kW Incremental encoder | 95 |
| MGME452G1D | MGME 4.5 kW Incremental encoder | 95 |
| MGME452G1G | MGME 4.5 kW Incremental encoder | 95 |
| MGME452G1H | MGME 4.5 kW Incremental encoder | 95 |
| MGME452S1C | MGME 4.5 kW Absolute encoder | 95 |
| MGME452S1D | MGME 4.5 kW Absolute encoder | 95 |
| MGME452S1G | MGME 4.5 kW Absolute encoder | 95 |
| MGME452S1H | MGME 4.5 kW Absolute encoder | 95 |
| MGME454G1C | MGME 4.5 kW Incremental encoder | 128 |
| MGME454G1D | MGME 4.5 kW Incremental encoder | 128 |
| MGME454G1G | MGME 4.5 kW Incremental encoder | 128 |
| MGME454G1H | MGME 4.5 kW Incremental encoder | 128 |
| MGME454S1C | MGME 4.5 kW Absolute encoder | 128 |
| MGME454S1D | MGME 4.5 kW Absolute encoder | 128 |
| MGME454S1G | MGME 4.5 kW Absolute encoder | 128 |
| MGME454S1H | MGME 4.5 kW Absolute encoder | 128 |
| MGME602G1C | MGME 6.0 kW Incremental encoder | 96 |
| MGME602G1D | MGME 6.0 kW Incremental encoder | 96 |
| MGME602G1G | MGME 6.0 kW Incremental encoder | 96 |
| MGME602G1H | MGME 6.0 kW Incremental encoder | 96 |
| MGME602S1C | MGME 6.0 kW Absolute encoder | 96 |
| MGME602S1D | MGME 6.0 kW Absolute encoder | 96 |
| MGME602S1G | MGME 6.0 kW Absolute encoder | 96 |
| MGME602S1H | MGME 6.0 kW Absolute encoder | 96 |
| MGME604G1C | MGME 6.0 kW Incremental encoder | 129 |
| MGME604G1D | MGME 6.0 kW Incremental encoder | 129 |
| MGME604G1G | MGME 6.0 kW Incremental encoder | 129 |
| MGME604G1H | MGME 6.0 kW Incremental encoder | 129 |
| MGME604S1C | MGME 6.0 kW Absolute encoder | 129 |
| MGME604S1D | MGME 6.0 kW Absolute encoder | 129 |
| MGME604S1G | MGME 6.0 kW Absolute encoder | 129 |
| MGME604S1H | MGME 6.0 kW Absolute encoder | 129 |

**MHDHT**

| Part No. | Title | Page |
|---|---|---|
| MHDHTB4A2 | A5 series Driver: H-frame | 29,47 |
| MHDHTC3B4 | A5 series Driver: H-frame | 29,47 |

**MHDKT**

| Part No. | Title | Page |
|---|---|---|
| MHDKTB4A2 | A5Ⅱ series Driver: H-frame | 29,47 |
| MHDKTC3B4 | A5Ⅱ series Driver: H-frame | 29,47 |

**MHMD (High inertia)**

| Part No. | Title | Page |
|---|---|---|
| MHMD021G1A | MHMD 200 W Incremental encoder | 59 |
| MHMD021G1B | MHMD 200 W Incremental encoder | 59 |
| MHMD021G1C | MHMD 200 W Incremental encoder | 59 |
| MHMD021G1D | MHMD 200 W Incremental encoder | 59 |
| MHMD021G1N | MHMD 200 W Incremental encoder | 59 |
| MHMD021G1P | MHMD 200 W Incremental encoder | 59 |
| MHMD021G1Q | MHMD 200 W Incremental encoder | 59 |
| MHMD021G1R | MHMD 200 W Incremental encoder | 59 |
| MHMD021G1S | MHMD 200 W Incremental encoder | 59 |
| MHMD021G1T | MHMD 200 W Incremental encoder | 59 |
| MHMD021G1U | MHMD 200 W Incremental encoder | 59 |
| MHMD021G1V | MHMD 200 W Incremental encoder | 59 |
| MHMD021S1A | MHMD 200 W Absolute encoder | 59 |
| MHMD021S1B | MHMD 200 W Absolute encoder | 59 |
| MHMD021S1C | MHMD 200 W Absolute encoder | 59 |
| MHMD021S1D | MHMD 200 W Absolute encoder | 59 |
| MHMD021S1N | MHMD 200 W Absolute encoder | 59 |
| MHMD021S1P | MHMD 200 W Absolute encoder | 59 |
| MHMD021S1Q | MHMD 200 W Absolute encoder | 59 |

**MHMD (High inertia)**

| Part No. | Title | Page |
|---|---|---|
| MHMD021S1R | MHMD 200 W Absolute encoder | 59 |
| MHMD021S1S | MHMD 200 W Absolute encoder | 59 |
| MHMD021S1T | MHMD 200 W Absolute encoder | 59 |
| MHMD021S1U | MHMD 200 W Absolute encoder | 59 |
| MHMD021S1V | MHMD 200 W Absolute encoder | 59 |
| MHMD022G1A | MHMD 200 W Incremental encoder | 60 |
| MHMD022G1B | MHMD 200 W Incremental encoder | 60 |
| MHMD022G1C | MHMD 200 W Incremental encoder | 60 |
| MHMD022G1D | MHMD 200 W Incremental encoder | 60 |
| MHMD022G1N | MHMD 200 W Incremental encoder | 60 |
| MHMD022G1P | MHMD 200 W Incremental encoder | 60 |
| MHMD022G1Q | MHMD 200 W Incremental encoder | 60 |
| MHMD022G1R | MHMD 200 W Incremental encoder | 60 |
| MHMD022G1S | MHMD 200 W Incremental encoder | 60 |
| MHMD022G1T | MHMD 200 W Incremental encoder | 60 |
| MHMD022G1U | MHMD 200 W Incremental encoder | 60 |
| MHMD022G1V | MHMD 200 W Incremental encoder | 60 |
| MHMD022S1A | MHMD 200 W Absolute encoder | 60 |
| MHMD022S1B | MHMD 200 W Absolute encoder | 60 |
| MHMD022S1C | MHMD 200 W Absolute encoder | 60 |
| MHMD022S1D | MHMD 200 W Absolute encoder | 60 |
| MHMD022S1N | MHMD 200 W Absolute encoder | 60 |
| MHMD022S1P | MHMD 200 W Absolute encoder | 60 |
| MHMD022S1Q | MHMD 200 W Absolute encoder | 60 |
| MHMD022S1R | MHMD 200 W Absolute encoder | 60 |
| MHMD022S1S | MHMD 200 W Absolute encoder | 60 |
| MHMD022S1T | MHMD 200 W Absolute encoder | 60 |
| MHMD022S1U | MHMD 200 W Absolute encoder | 60 |
| MHMD022S1V | MHMD 200 W Absolute encoder | 60 |
| MHMD041G1A | MHMD 400 W Incremental encoder | 61 |
| MHMD041G1B | MHMD 400 W Incremental encoder | 61 |
| MHMD041G1C | MHMD 400 W Incremental encoder | 61 |
| MHMD041G1D | MHMD 400 W Incremental encoder | 61 |
| MHMD041G1N | MHMD 400 W Incremental encoder | 61 |
| MHMD041G1P | MHMD 400 W Incremental encoder | 61 |
| MHMD041G1Q | MHMD 400 W Incremental encoder | 61 |
| MHMD041G1R | MHMD 400 W Incremental encoder | 61 |
| MHMD041G1S | MHMD 400 W Incremental encoder | 61 |
| MHMD041G1T | MHMD 400 W Incremental encoder | 61 |
| MHMD041G1U | MHMD 400 W Incremental encoder | 61 |
| MHMD041G1V | MHMD 400 W Incremental encoder | 61 |
| MHMD041S1A | MHMD 400 W Absolute encoder | 61 |
| MHMD041S1B | MHMD 400 W Absolute encoder | 61 |
| MHMD041S1C | MHMD 400 W Absolute encoder | 61 |
| MHMD041S1D | MHMD 400 W Absolute encoder | 61 |
| MHMD041S1N | MHMD 400 W Absolute encoder | 61 |
| MHMD041S1P | MHMD 400 W Absolute encoder | 61 |
| MHMD041S1Q | MHMD 400 W Absolute encoder | 61 |
| MHMD041S1R | MHMD 400 W Absolute encoder | 61 |
| MHMD041S1S | MHMD 400 W Absolute encoder | 61 |
| MHMD041S1T | MHMD 400 W Absolute encoder | 61 |
| MHMD041S1U | MHMD 400 W Absolute encoder | 61 |
| MHMD041S1V | MHMD 400 W Absolute encoder | 61 |
| MHMD042G1A | MHMD 400 W Incremental encoder | 62 |
| MHMD042G1B | MHMD 400 W Incremental encoder | 62 |
| MHMD042G1C | MHMD 400 W Incremental encoder | 62 |
| MHMD042G1D | MHMD 400 W Incremental encoder | 62 |
| MHMD042G1N | MHMD 400 W Incremental encoder | 62 |
| MHMD042G1P | MHMD 400 W Incremental encoder | 62 |
| MHMD042G1Q | MHMD 400 W Incremental encoder | 62 |
| MHMD042G1R | MHMD 400 W Incremental encoder | 62 |
| MHMD042G1S | MHMD 400 W Incremental encoder | 62 |
| MHMD042G1T | MHMD 400 W Incremental encoder | 62 |
| MHMD042G1U | MHMD 400 W Incremental encoder | 62 |
| MHMD042G1V | MHMD 400 W Incremental encoder | 62 |
| MHMD042S1A | MHMD 400 W Absolute encoder | 62 |
| MHMD042S1B | MHMD 400 W Absolute encoder | 62 |
| MHMD042S1C | MHMD 400 W Absolute encoder | 62 |
| MHMD042S1D | MHMD 400 W Absolute encoder | 62 |
| MHMD042S1N | MHMD 400 W Absolute encoder | 62 |
| MHMD042S1P | MHMD 400 W Absolute encoder | 62 |
| MHMD042S1Q | MHMD 400 W Absolute encoder | 62 |

# Index
## (Alphabetical Order)


**MHMD (High inertia)**

| Part No. | Title | Page |
|---|---|---|
| MHMD042S1R | MHMD 400 W Absolute encoder | 62 |
| MHMD042S1S | MHMD 400 W Absolute encoder | 62 |
| MHMD042S1T | MHMD 400 W Absolute encoder | 62 |
| MHMD042S1U | MHMD 400 W Absolute encoder | 62 |
| MHMD042S1V | MHMD 400 W Absolute encoder | 62 |
| MHMD082G1A | MHMD 750 W Incremental encoder | 63 |
| MHMD082G1B | MHMD 750 W Incremental encoder | 63 |
| MHMD082G1C | MHMD 750 W Incremental encoder | 63 |
| MHMD082G1D | MHMD 750 W Incremental encoder | 63 |
| MHMD082G1N | MHMD 750 W Incremental encoder | 63 |
| MHMD082G1P | MHMD 750 W Incremental encoder | 63 |
| MHMD082G1Q | MHMD 750 W Incremental encoder | 63 |
| MHMD082G1R | MHMD 750 W Incremental encoder | 63 |
| MHMD082G1S | MHMD 750 W Incremental encoder | 63 |
| MHMD082G1T | MHMD 750 W Incremental encoder | 63 |
| MHMD082G1U | MHMD 750 W Incremental encoder | 63 |
| MHMD082G1V | MHMD 750 W Incremental encoder | 63 |
| MHMD082S1A | MHMD 750 W Absolute encoder | 63 |
| MHMD082S1B | MHMD 750 W Absolute encoder | 63 |
| MHMD082S1C | MHMD 750 W Absolute encoder | 63 |
| MHMD082S1D | MHMD 750 W Absolute encoder | 63 |
| MHMD082S1N | MHMD 750 W Absolute encoder | 63 |
| MHMD082S1P | MHMD 750 W Absolute encoder | 63 |
| MHMD082S1Q | MHMD 750 W Absolute encoder | 63 |
| MHMD082S1R | MHMD 750 W Absolute encoder | 63 |
| MHMD082S1S | MHMD 750 W Absolute encoder | 63 |
| MHMD082S1T | MHMD 750 W Absolute encoder | 63 |
| MHMD082S1U | MHMD 750 W Absolute encoder | 63 |
| MHMD082S1V | MHMD 750 W Absolute encoder | 63 |

**MHMD with Gear Reducer (High inertia)**

| Part No. | Title | Page |
|---|---|---|
| MHMD021G31N | MHMD with reduction gear 200 W Incremental encoder | 141,149 |
| MHMD021G32N | MHMD with reduction gear 200 W Incremental encoder | 141,149 |
| MHMD021G33N | MHMD with reduction gear 200 W Incremental encoder | 141,149 |
| MHMD021G34N | MHMD with reduction gear 200 W Incremental encoder | 141,149 |
| MHMD021G41N | MHMD with reduction gear 200 W Incremental encoder | 141,149 |
| MHMD021G42N | MHMD with reduction gear 200 W Incremental encoder | 141,149 |
| MHMD021G43N | MHMD with reduction gear 200 W Incremental encoder | 141,149 |
| MHMD021G44N | MHMD with reduction gear 200 W Incremental encoder | 141,149 |
| MHMD021S31N | MHMD with reduction gear 200 W Absolute encoder | 141,149 |
| MHMD021S32N | MHMD with reduction gear 200 W Absolute encoder | 141,149 |
| MHMD021S33N | MHMD with reduction gear 200 W Absolute encoder | 141,149 |
| MHMD021S34N | MHMD with reduction gear 200 W Absolute encoder | 141,149 |
| MHMD021S41N | MHMD with reduction gear 200 W Absolute encoder | 141,149 |
| MHMD021S42N | MHMD with reduction gear 200 W Absolute encoder | 141,149 |
| MHMD021S43N | MHMD with reduction gear 200 W Absolute encoder | 141,149 |
| MHMD021S44N | MHMD with reduction gear 200 W Absolute encoder | 141,149 |
| MHMD022G31N | MHMD with reduction gear 200 W Incremental encoder | 141,149 |
| MHMD022G32N | MHMD with reduction gear 200 W Incremental encoder | 141,149 |
| MHMD022G33N | MHMD with reduction gear 200 W Incremental encoder | 141,149 |
| MHMD022G34N | MHMD with reduction gear 200 W Incremental encoder | 141,149 |
| MHMD022G41N | MHMD with reduction gear 200 W Incremental encoder | 141,149 |
| MHMD022G42N | MHMD with reduction gear 200 W Incremental encoder | 141,149 |
| MHMD022G43N | MHMD with reduction gear 200 W Incremental encoder | 141,149 |
| MHMD022G44N | MHMD with reduction gear 200 W Incremental encoder | 141,149 |
| MHMD022S31N | MHMD with reduction gear 200 W Absolute encoder | 141,149 |
| MHMD022S32N | MHMD with reduction gear 200 W Absolute encoder | 141,149 |
| MHMD022S33N | MHMD with reduction gear 200 W Absolute encoder | 141,149 |
| MHMD022S34N | MHMD with reduction gear 200 W Absolute encoder | 141,149 |
| MHMD022S41N | MHMD with reduction gear 200 W Absolute encoder | 141,149 |
| MHMD022S42N | MHMD with reduction gear 200 W Absolute encoder | 141,149 |
| MHMD022S43N | MHMD with reduction gear 200 W Absolute encoder | 141,149 |
| MHMD022S44N | MHMD with reduction gear 200 W Absolute encoder | 141,149 |
| MHMD041G31N | MHMD with reduction gear 400 W Incremental encoder | 141,149 |
| MHMD041G32N | MHMD with reduction gear 400 W Incremental encoder | 141,149 |
| MHMD041G33N | MHMD with reduction gear 400 W Incremental encoder | 141,149 |
| MHMD041G34N | MHMD with reduction gear 400 W Incremental encoder | 141,149 |
| MHMD041G41N | MHMD with reduction gear 400 W Incremental encoder | 141,149 |
| MHMD041G42N | MHMD with reduction gear 400 W Incremental encoder | 141,149 |
| MHMD041G43N | MHMD with reduction gear 400 W Incremental encoder | 141,149 |
| MHMD041G44N | MHMD with reduction gear 400 W Incremental encoder | 141,149 |

**MHMD with Gear Reducer (High inertia)**

| Part No. | Title | Page |
|---|---|---|
| MHMD041S31N | MHMD with reduction gear 400 W Absolute encoder | 141,149 |
| MHMD041S32N | MHMD with reduction gear 400 W Absolute encoder | 141,149 |
| MHMD041S33N | MHMD with reduction gear 400 W Absolute encoder | 141,149 |
| MHMD041S34N | MHMD with reduction gear 400 W Absolute encoder | 141,149 |
| MHMD041S41N | MHMD with reduction gear 400 W Absolute encoder | 141,149 |
| MHMD041S42N | MHMD with reduction gear 400 W Absolute encoder | 141,149 |
| MHMD041S43N | MHMD with reduction gear 400 W Absolute encoder | 141,149 |
| MHMD041S44N | MHMD with reduction gear 400 W Absolute encoder | 141,149 |
| MHMD042G31N | MHMD with reduction gear 400 W Incremental encoder | 141,149 |
| MHMD042G32N | MHMD with reduction gear 400 W Incremental encoder | 141,149 |
| MHMD042G33N | MHMD with reduction gear 400 W Incremental encoder | 141,149 |
| MHMD042G34N | MHMD with reduction gear 400 W Incremental encoder | 141,149 |
| MHMD042G41N | MHMD with reduction gear 400 W Incremental encoder | 141,149 |
| MHMD042G42N | MHMD with reduction gear 400 W Incremental encoder | 141,149 |
| MHMD042G43N | MHMD with reduction gear 400 W Incremental encoder | 141,149 |
| MHMD042G44N | MHMD with reduction gear 400 W Incremental encoder | 141,149 |
| MHMD042S31N | MHMD with reduction gear 400 W Absolute encoder | 141,149 |
| MHMD042S32N | MHMD with reduction gear 400 W Absolute encoder | 141,149 |
| MHMD042S33N | MHMD with reduction gear 400 W Absolute encoder | 141,149 |
| MHMD042S34N | MHMD with reduction gear 400 W Absolute encoder | 141,149 |
| MHMD042S41N | MHMD with reduction gear 400 W Absolute encoder | 141,149 |
| MHMD042S42N | MHMD with reduction gear 400 W Absolute encoder | 141,149 |
| MHMD042S43N | MHMD with reduction gear 400 W Absolute encoder | 141,149 |
| MHMD042S44N | MHMD with reduction gear 400 W Absolute encoder | 141,149 |
| MHMD082G31N | MHMD with reduction gear 750 W Incremental encoder | 141,149 |
| MHMD082G32N | MHMD with reduction gear 750 W Incremental encoder | 141,149 |
| MHMD082G33N | MHMD with reduction gear 750 W Incremental encoder | 141,149 |
| MHMD082G34N | MHMD with reduction gear 750 W Incremental encoder | 141,149 |
| MHMD082G41N | MHMD with reduction gear 750 W Incremental encoder | 141,149 |
| MHMD082G42N | MHMD with reduction gear 750 W Incremental encoder | 141,149 |
| MHMD082G43N | MHMD with reduction gear 750 W Incremental encoder | 141,149 |
| MHMD082G44N | MHMD with reduction gear 750 W Incremental encoder | 141,149 |
| MHMD082S31N | MHMD with reduction gear 750 W Absolute encoder | 141,149 |
| MHMD082S32N | MHMD with reduction gear 750 W Absolute encoder | 141,149 |
| MHMD082S33N | MHMD with reduction gear 750 W Absolute encoder | 141,149 |
| MHMD082S34N | MHMD with reduction gear 750 W Absolute encoder | 141,149 |
| MHMD082S41N | MHMD with reduction gear 750 W Absolute encoder | 141,149 |
| MHMD082S42N | MHMD with reduction gear 750 W Absolute encoder | 141,149 |
| MHMD082S43N | MHMD with reduction gear 750 W Absolute encoder | 141,149 |
| MHMD082S44N | MHMD with reduction gear 750 W Absolute encoder | 141,149 |

**MHME (High inertia)**

| Part No. | Title | Page |
|---|---|---|
| MHME102G1C | MHME 1.0 kW Incremental encoder | 97 |
| MHME102G1D | MHME 1.0 kW Incremental encoder | 97 |
| MHME102G1G | MHME 1.0 kW Incremental encoder | 97 |
| MHME102G1H | MHME 1.0 kW Incremental encoder | 97 |
| MHME102GCC | MHME 1.0 kW Incremental encoder | 97 |
| MHME102GCCM | MHME 1.0 kW Incremental encoder | 176 |
| MHME102GCD | MHME 1.0 kW Incremental encoder | 97 |
| MHME102GCDM | MHME 1.0 kW Incremental encoder | 176 |
| MHME102GCG | MHME 1.0 kW Incremental encoder | 97 |
| MHME102GCGM | MHME 1.0 kW Incremental encoder | 176 |
| MHME102GCH | MHME 1.0 kW Incremental encoder | 97 |
| MHME102GCHM | MHME 1.0 kW Incremental encoder | 176 |
| MHME102S1C | MHME 1.0 kW Absolute encoder | 97 |
| MHME102S1D | MHME 1.0 kW Absolute encoder | 97 |
| MHME102S1G | MHME 1.0 kW Absolute encoder | 97 |
| MHME102S1H | MHME 1.0 kW Absolute encoder | 97 |
| MHME102SCC | MHME 1.0 kW Absolute encoder | 97 |
| MHME102SCCM | MHME 1.0 kW Absolute encoder | 176 |
| MHME102SCD | MHME 1.0 kW Absolute encoder | 97 |
| MHME102SCDM | MHME 1.0 kW Absolute encoder | 176 |
| MHME102SCG | MHME 1.0 kW Absolute encoder | 97 |
| MHME102SCGM | MHME 1.0 kW Absolute encoder | 176 |
| MHME102SCH | MHME 1.0 kW Absolute encoder | 97 |
| MHME102SCHM | MHME 1.0 kW Absolute encoder | 176 |
| MHME104G1C | MHME 1.0 kW Incremental encoder | 130 |
| MHME104G1D | MHME 1.0 kW Incremental encoder | 130 |
| MHME104G1G | MHME 1.0 kW Incremental encoder | 130 |
| MHME104G1H | MHME 1.0 kW Incremental encoder | 130 |
| MHME104GCC | MHME 1.0 kW Incremental encoder | 130 |

**MHME (High inertia)**

| Part No. | Title | Page |
|---|---|---|
| MHME104GCD | MHME 1.0 kW Incremental encoder | 130 |
| MHME104GCG | MHME 1.0 kW Incremental encoder | 130 |
| MHME104GCH | MHME 1.0 kW Incremental encoder | 130 |
| MHME104S1C | MHME 1.0 kW Absolute encoder | 130 |
| MHME104S1D | MHME 1.0 kW Absolute encoder | 130 |
| MHME104S1G | MHME 1.0 kW Absolute encoder | 130 |
| MHME104S1H | MHME 1.0 kW Absolute encoder | 130 |
| MHME104SCC | MHME 1.0 kW Absolute encoder | 130 |
| MHME104SCD | MHME 1.0 kW Absolute encoder | 130 |
| MHME104SCG | MHME 1.0 kW Absolute encoder | 130 |
| MHME104SCH | MHME 1.0 kW Absolute encoder | 130 |
| MHME152G1C | MHME 1.5 kW Incremental encoder | 98 |
| MHME152G1D | MHME 1.5 kW Incremental encoder | 98 |
| MHME152G1G | MHME 1.5 kW Incremental encoder | 98 |
| MHME152G1H | MHME 1.5 kW Incremental encoder | 98 |
| MHME152GCC | MHME 1.5 kW Incremental encoder | 98 |
| MHME152GCCM | MHME 1.5 kW Incremental encoder | 177 |
| MHME152GCD | MHME 1.5 kW Incremental encoder | 98 |
| MHME152GCDM | MHME 1.5 kW Incremental encoder | 177 |
| MHME152GCG | MHME 1.5 kW Incremental encoder | 98 |
| MHME152GCGM | MHME 1.5 kW Incremental encoder | 177 |
| MHME152GCH | MHME 1.5 kW Incremental encoder | 98 |
| MHME152GCHM | MHME 1.5 kW Incremental encoder | 177 |
| MHME152S1C | MHME 1.5 kW Absolute encoder | 98 |
| MHME152S1D | MHME 1.5 kW Absolute encoder | 98 |
| MHME152S1G | MHME 1.5 kW Absolute encoder | 98 |
| MHME152S1H | MHME 1.5 kW Absolute encoder | 98 |
| MHME152SCC | MHME 1.5 kW Absolute encoder | 98 |
| MHME152SCCM | MHME 1.5 kW Absolute encoder | 177 |
| MHME152SCD | MHME 1.5 kW Absolute encoder | 98 |
| MHME152SCDM | MHME 1.5 kW Absolute encoder | 177 |
| MHME152SCG | MHME 1.5 kW Absolute encoder | 98 |
| MHME152SCGM | MHME 1.5 kW Absolute encoder | 177 |
| MHME152SCH | MHME 1.5 kW Absolute encoder | 98 |
| MHME152SCHM | MHME 1.5 kW Absolute encoder | 177 |
| MHME154G1C | MHME 1.5 kW Incremental encoder | 131 |
| MHME154G1D | MHME 1.5 kW Incremental encoder | 131 |
| MHME154G1G | MHME 1.5 kW Incremental encoder | 131 |
| MHME154G1H | MHME 1.5 kW Incremental encoder | 131 |
| MHME154GCC | MHME 1.5 kW Incremental encoder | 131 |
| MHME154GCD | MHME 1.5 kW Incremental encoder | 131 |
| MHME154GCG | MHME 1.5 kW Incremental encoder | 131 |
| MHME154GCH | MHME 1.5 kW Incremental encoder | 131 |
| MHME154S1C | MHME 1.5 kW Absolute encoder | 131 |
| MHME154S1D | MHME 1.5 kW Absolute encoder | 131 |
| MHME154S1G | MHME 1.5 kW Absolute encoder | 131 |
| MHME154S1H | MHME 1.5 kW Absolute encoder | 131 |
| MHME154SCC | MHME 1.5 kW Absolute encoder | 131 |
| MHME154SCD | MHME 1.5 kW Absolute encoder | 131 |
| MHME154SCG | MHME 1.5 kW Absolute encoder | 131 |
| MHME154SCH | MHME 1.5 kW Absolute encoder | 131 |
| MHME202G1C | MHME 2.0 kW Incremental encoder | 99 |
| MHME202G1D | MHME 2.0 kW Incremental encoder | 99 |
| MHME202G1G | MHME 2.0 kW Incremental encoder | 99 |
| MHME202G1H | MHME 2.0 kW Incremental encoder | 99 |
| MHME202GCC | MHME 2.0 kW Incremental encoder | 99 |
| MHME202GCCM | MHME 2.0 kW Incremental encoder | 178 |
| MHME202GCD | MHME 2.0 kW Incremental encoder | 99 |
| MHME202GCDM | MHME 2.0 kW Incremental encoder | 178 |
| MHME202GCG | MHME 2.0 kW Incremental encoder | 99 |
| MHME202GCGM | MHME 2.0 kW Incremental encoder | 178 |
| MHME202GCH | MHME 2.0 kW Incremental encoder | 99 |
| MHME202GCHM | MHME 2.0 kW Incremental encoder | 178 |
| MHME202S1C | MHME 2.0 kW Absolute encoder | 99 |
| MHME202S1D | MHME 2.0 kW Absolute encoder | 99 |
| MHME202S1G | MHME 2.0 kW Absolute encoder | 99 |
| MHME202S1H | MHME 2.0 kW Absolute encoder | 99 |
| MHME202SCC | MHME 2.0 kW Absolute encoder | 99 |
| MHME202SCCM | MHME 2.0 kW Absolute encoder | 178 |
| MHME202SCD | MHME 2.0 kW Absolute encoder | 99 |
| MHME202SCDM | MHME 2.0 kW Absolute encoder | 178 |
| MHME202SCG | MHME 2.0 kW Absolute encoder | 99 |

**MHME (High inertia)**

| Part No. | Title | Page |
|---|---|---|
| MHME202SCGM | MHME 2.0 kW Absolute encoder | 178 |
| MHME202SCH | MHME 2.0 kW Absolute encoder | 99 |
| MHME202SCHM | MHME 2.0 kW Absolute encoder | 178 |
| MHME204G1C | MHME 2.0 kW Incremental encoder | 132 |
| MHME204G1D | MHME 2.0 kW Incremental encoder | 132 |
| MHME204G1G | MHME 2.0 kW Incremental encoder | 132 |
| MHME204G1H | MHME 2.0 kW Incremental encoder | 132 |
| MHME204GCC | MHME 2.0 kW Incremental encoder | 132 |
| MHME204GCD | MHME 2.0 kW Incremental encoder | 132 |
| MHME204GCG | MHME 2.0 kW Incremental encoder | 132 |
| MHME204GCH | MHME 2.0 kW Incremental encoder | 132 |
| MHME204S1C | MHME 2.0 kW Absolute encoder | 132 |
| MHME204S1D | MHME 2.0 kW Absolute encoder | 132 |
| MHME204S1G | MHME 2.0 kW Absolute encoder | 132 |
| MHME204S1H | MHME 2.0 kW Absolute encoder | 132 |
| MHME204SCC | MHME 2.0 kW Absolute encoder | 132 |
| MHME204SCD | MHME 2.0 kW Absolute encoder | 132 |
| MHME204SCG | MHME 2.0 kW Absolute encoder | 132 |
| MHME204SCH | MHME 2.0 kW Absolute encoder | 132 |
| MHME302G1C | MHME 3.0 kW Incremental encoder | 100 |
| MHME302G1D | MHME 3.0 kW Incremental encoder | 100 |
| MHME302G1G | MHME 3.0 kW Incremental encoder | 100 |
| MHME302G1H | MHME 3.0 kW Incremental encoder | 100 |
| MHME302GCC | MHME 3.0 kW Incremental encoder | 100 |
| MHME302GCCM | MHME 3.0 kW Incremental encoder | 179 |
| MHME302GCD | MHME 3.0 kW Incremental encoder | 100 |
| MHME302GCDM | MHME 3.0 kW Incremental encoder | 179 |
| MHME302GCG | MHME 3.0 kW Incremental encoder | 100 |
| MHME302GCGM | MHME 3.0 kW Incremental encoder | 179 |
| MHME302GCH | MHME 3.0 kW Incremental encoder | 100 |
| MHME302GCHM | MHME 3.0 kW Incremental encoder | 179 |
| MHME302S1C | MHME 3.0 kW Absolute encoder | 100 |
| MHME302S1D | MHME 3.0 kW Absolute encoder | 100 |
| MHME302S1G | MHME 3.0 kW Absolute encoder | 100 |
| MHME302S1H | MHME 3.0 kW Absolute encoder | 100 |
| MHME302SCC | MHME 3.0 kW Absolute encoder | 100 |
| MHME302SCCM | MHME 3.0 kW Absolute encoder | 179 |
| MHME302SCD | MHME 3.0 kW Absolute encoder | 100 |
| MHME302SCDM | MHME 3.0 kW Absolute encoder | 179 |
| MHME302SCG | MHME 3.0 kW Absolute encoder | 100 |
| MHME302SCGM | MHME 3.0 kW Absolute encoder | 179 |
| MHME302SCH | MHME 3.0 kW Absolute encoder | 100 |
| MHME302SCHM | MHME 3.0 kW Absolute encoder | 179 |
| MHME304G1C | MHME 3.0 kW Incremental encoder | 133 |
| MHME304G1D | MHME 3.0 kW Incremental encoder | 133 |
| MHME304G1G | MHME 3.0 kW Incremental encoder | 133 |
| MHME304G1H | MHME 3.0 kW Incremental encoder | 133 |
| MHME304GCC | MHME 3.0 kW Incremental encoder | 133 |
| MHME304GCD | MHME 3.0 kW Incremental encoder | 133 |
| MHME304GCG | MHME 3.0 kW Incremental encoder | 133 |
| MHME304GCH | MHME 3.0 kW Incremental encoder | 133 |
| MHME304S1C | MHME 3.0 kW Absolute encoder | 133 |
| MHME304S1D | MHME 3.0 kW Absolute encoder | 133 |
| MHME304S1G | MHME 3.0 kW Absolute encoder | 133 |
| MHME304S1H | MHME 3.0 kW Absolute encoder | 133 |
| MHME304SCC | MHME 3.0 kW Absolute encoder | 133 |
| MHME304SCD | MHME 3.0 kW Absolute encoder | 133 |
| MHME304SCG | MHME 3.0 kW Absolute encoder | 133 |
| MHME304SCH | MHME 3.0 kW Absolute encoder | 133 |
| MHME402G1C | MHME 4.0 kW Incremental encoder | 101 |
| MHME402G1D | MHME 4.0 kW Incremental encoder | 101 |
| MHME402G1G | MHME 4.0 kW Incremental encoder | 101 |
| MHME402G1H | MHME 4.0 kW Incremental encoder | 101 |
| MHME402GCC | MHME 4.0 kW Incremental encoder | 101 |
| MHME402GCCM | MHME 4.0 kW Incremental encoder | 180 |
| MHME402GCD | MHME 4.0 kW Incremental encoder | 101 |
| MHME402GCDM | MHME 4.0 kW Incremental encoder | 180 |
| MHME402GCG | MHME 4.0 kW Incremental encoder | 101 |
| MHME402GCGM | MHME 4.0 kW Incremental encoder | 180 |
| MHME402GCH | MHME 4.0 kW Incremental encoder | 101 |
| MHME402GCHM | MHME 4.0 kW Incremental encoder | 180 |
| MHME402S1C | MHME 4.0 kW Absolute encoder | 101 |

# Index
## (Alphabetical Order)


**MHME (High inertia)**

| Part No. | Title | Page |
|---|---|---|
| MHME402S1D | MHME 4.0 kW Absolute encoder | 101 |
| MHME402S1G | MHME 4.0 kW Absolute encoder | 101 |
| MHME402S1H | MHME 4.0 kW Absolute encoder | 101 |
| MHME402SCC | MHME 4.0 kW Absolute encoder | 101 |
| MHME402SCCM | MHME 4.0 kW Absolute encoder | 180 |
| MHME402SCD | MHME 4.0 kW Absolute encoder | 101 |
| MHME402SCDM | MHME 4.0 kW Absolute encoder | 180 |
| MHME402SCG | MHME 4.0 kW Absolute encoder | 101 |
| MHME402SCGM | MHME 4.0 kW Absolute encoder | 180 |
| MHME402SCH | MHME 4.0 kW Absolute encoder | 101 |
| MHME402SCHM | MHME 4.0 kW Absolute encoder | 180 |
| MHME404G1C | MHME 4.0 kW Incremental encoder | 134 |
| MHME404G1D | MHME 4.0 kW Incremental encoder | 134 |
| MHME404G1G | MHME 4.0 kW Incremental encoder | 134 |
| MHME404G1H | MHME 4.0 kW Incremental encoder | 134 |
| MHME404GCC | MHME 4.0 kW Incremental encoder | 134 |
| MHME404GCD | MHME 4.0 kW Incremental encoder | 134 |
| MHME404GCG | MHME 4.0 kW Incremental encoder | 134 |
| MHME404GCH | MHME 4.0 kW Incremental encoder | 134 |
| MHME404S1C | MHME 4.0 kW Absolute encoder | 134 |
| MHME404S1D | MHME 4.0 kW Absolute encoder | 134 |
| MHME404S1G | MHME 4.0 kW Absolute encoder | 134 |
| MHME404S1H | MHME 4.0 kW Absolute encoder | 134 |
| MHME404SCC | MHME 4.0 kW Absolute encoder | 134 |
| MHME404SCD | MHME 4.0 kW Absolute encoder | 134 |
| MHME404SCG | MHME 4.0 kW Absolute encoder | 134 |
| MHME404SCH | MHME 4.0 kW Absolute encoder | 134 |
| MHME502G1C | MHME 5.0 kW Incremental encoder | 102 |
| MHME502G1D | MHME 5.0 kW Incremental encoder | 102 |
| MHME502G1G | MHME 5.0 kW Incremental encoder | 102 |
| MHME502G1H | MHME 5.0 kW Incremental encoder | 102 |
| MHME502GCC | MHME 5.0 kW Incremental encoder | 102 |
| MHME502GCCM | MHME 5.0 kW Incremental encoder | 181 |
| MHME502GCD | MHME 5.0 kW Incremental encoder | 102 |
| MHME502GCDM | MHME 5.0 kW Incremental encoder | 181 |
| MHME502GCG | MHME 5.0 kW Incremental encoder | 102 |
| MHME502GCGM | MHME 5.0 kW Incremental encoder | 181 |
| MHME502GCH | MHME 5.0 kW Incremental encoder | 102 |
| MHME502GCHM | MHME 5.0 kW Incremental encoder | 181 |
| MHME502S1C | MHME 5.0 kW Absolute encoder | 102 |
| MHME502S1D | MHME 5.0 kW Absolute encoder | 102 |
| MHME502S1G | MHME 5.0 kW Absolute encoder | 102 |
| MHME502S1H | MHME 5.0 kW Absolute encoder | 102 |
| MHME502SCC | MHME 5.0 kW Absolute encoder | 102 |
| MHME502SCCM | MHME 5.0 kW Absolute encoder | 181 |
| MHME502SCD | MHME 5.0 kW Absolute encoder | 102 |
| MHME502SCDM | MHME 5.0 kW Absolute encoder | 181 |
| MHME502SCG | MHME 5.0 kW Absolute encoder | 102 |
| MHME502SCGM | MHME 5.0 kW Absolute encoder | 181 |
| MHME502SCH | MHME 5.0 kW Absolute encoder | 102 |
| MHME502SCHM | MHME 5.0 kW Absolute encoder | 181 |
| MHME504G1C | MHME 5.0 kW Incremental encoder | 135 |
| MHME504G1D | MHME 5.0 kW Incremental encoder | 135 |
| MHME504G1G | MHME 5.0 kW Incremental encoder | 135 |
| MHME504G1H | MHME 5.0 kW Incremental encoder | 135 |
| MHME504GCC | MHME 5.0 kW Incremental encoder | 135 |
| MHME504GCD | MHME 5.0 kW Incremental encoder | 135 |
| MHME504GCG | MHME 5.0 kW Incremental encoder | 135 |
| MHME504GCH | MHME 5.0 kW Incremental encoder | 135 |
| MHME504S1C | MHME 5.0 kW Absolute encoder | 135 |
| MHME504S1D | MHME 5.0 kW Absolute encoder | 135 |
| MHME504S1G | MHME 5.0 kW Absolute encoder | 135 |
| MHME504S1H | MHME 5.0 kW Absolute encoder | 135 |
| MHME504SCC | MHME 5.0 kW Absolute encoder | 135 |
| MHME504SCD | MHME 5.0 kW Absolute encoder | 135 |
| MHME504SCG | MHME 5.0 kW Absolute encoder | 135 |
| MHME504SCH | MHME 5.0 kW Absolute encoder | 135 |
| MHME752G1C | MHME 7.5 kW Incremental encoder | 103 |
| MHME752G1D | MHME 7.5 kW Incremental encoder | 103 |
| MHME752G1G | MHME 7.5 kW Incremental encoder | 103 |
| MHME752G1H | MHME 7.5 kW Incremental encoder | 103 |
| MHME752S1C | MHME 7.5 kW Absolute encoder | 103 |

**MHME (High inertia)**

| Part No. | Title | Page |
|---|---|---|
| MHME752S1D | MHME 7.5 kW Absolute encoder | 103 |
| MHME752S1G | MHME 7.5 kW Absolute encoder | 103 |
| MHME752S1H | MHME 7.5 kW Absolute encoder | 103 |
| MHME754G1C | MHME 7.5 kW Incremental encoder | 136 |
| MHME754G1D | MHME 7.5 kW Incremental encoder | 136 |
| MHME754G1G | MHME 7.5 kW Incremental encoder | 136 |
| MHME754G1H | MHME 7.5 kW Incremental encoder | 136 |
| MHME754S1C | MHME 7.5 kW Absolute encoder | 136 |
| MHME754S1D | MHME 7.5 kW Absolute encoder | 136 |
| MHME754S1G | MHME 7.5 kW Absolute encoder | 136 |
| MHME754S1H | MHME 7.5 kW Absolute encoder | 136 |

**MHMJ (High inertia)**

| Part No. | Title | Page |
|---|---|---|
| MHMJ022G1A | MHMJ 200 W Incremental encoder | 173 |
| MHMJ022G1B | MHMJ 200 W Incremental encoder | 173 |
| MHMJ022G1C | MHMJ 200 W Incremental encoder | 173 |
| MHMJ022G1D | MHMJ 200 W Incremental encoder | 173 |
| MHMJ022G1S | MHMJ 200 W Incremental encoder | 173 |
| MHMJ022G1T | MHMJ 200 W Incremental encoder | 173 |
| MHMJ022G1U | MHMJ 200 W Incremental encoder | 173 |
| MHMJ022G1V | MHMJ 200 W Incremental encoder | 173 |
| MHMJ022S1A | MHMJ 200 W Absolute encoder | 173 |
| MHMJ022S1B | MHMJ 200 W Absolute encoder | 173 |
| MHMJ022S1C | MHMJ 200 W Absolute encoder | 173 |
| MHMJ022S1D | MHMJ 200 W Absolute encoder | 173 |
| MHMJ022S1S | MHMJ 200 W Absolute encoder | 173 |
| MHMJ022S1T | MHMJ 200 W Absolute encoder | 173 |
| MHMJ022S1U | MHMJ 200 W Absolute encoder | 173 |
| MHMJ022S1V | MHMJ 200 W Absolute encoder | 173 |
| MHMJ042G1A | MHMJ 400 W Incremental encoder | 174 |
| MHMJ042G1B | MHMJ 400 W Incremental encoder | 174 |
| MHMJ042G1C | MHMJ 400 W Incremental encoder | 174 |
| MHMJ042G1D | MHMJ 400 W Incremental encoder | 174 |
| MHMJ042G1S | MHMJ 400 W Incremental encoder | 174 |
| MHMJ042G1T | MHMJ 400 W Incremental encoder | 174 |
| MHMJ042G1U | MHMJ 400 W Incremental encoder | 174 |
| MHMJ042G1V | MHMJ 400 W Incremental encoder | 174 |
| MHMJ042S1A | MHMJ 400 W Absolute encoder | 174 |
| MHMJ042S1B | MHMJ 400 W Absolute encoder | 174 |
| MHMJ042S1C | MHMJ 400 W Absolute encoder | 174 |
| MHMJ042S1D | MHMJ 400 W Absolute encoder | 174 |
| MHMJ042S1S | MHMJ 400 W Absolute encoder | 174 |
| MHMJ042S1T | MHMJ 400 W Absolute encoder | 174 |
| MHMJ042S1U | MHMJ 400 W Absolute encoder | 174 |
| MHMJ042S1V | MHMJ 400 W Absolute encoder | 174 |
| MHMJ082G1A | MHMJ 750 W Incremental encoder | 175 |
| MHMJ082G1B | MHMJ 750 W Incremental encoder | 175 |
| MHMJ082G1C | MHMJ 750 W Incremental encoder | 175 |
| MHMJ082G1D | MHMJ 750 W Incremental encoder | 175 |
| MHMJ082G1S | MHMJ 750 W Incremental encoder | 175 |
| MHMJ082G1T | MHMJ 750 W Incremental encoder | 175 |
| MHMJ082G1U | MHMJ 750 W Incremental encoder | 175 |
| MHMJ082G1V | MHMJ 750 W Incremental encoder | 175 |
| MHMJ082S1A | MHMJ 750 W Absolute encoder | 175 |
| MHMJ082S1B | MHMJ 750 W Absolute encoder | 175 |
| MHMJ082S1C | MHMJ 750 W Absolute encoder | 175 |
| MHMJ082S1D | MHMJ 750 W Absolute encoder | 175 |
| MHMJ082S1S | MHMJ 750 W Absolute encoder | 175 |
| MHMJ082S1T | MHMJ 750 W Absolute encoder | 175 |
| MHMJ082S1U | MHMJ 750 W Absolute encoder | 175 |
| MHMJ082S1V | MHMJ 750 W Absolute encoder | 175 |

**MKDET**

| Part No. | Title | Page |
|---|---|---|
| MKDET1105P | E series Driver: K-frame | 223,226 |
| MKDET1110P | E series Driver: K-frame | 223,226 |
| MKDET1310P | E series Driver: K-frame | 223,226 |
| MKDET1505P | E series Driver: K-frame | 223,226 |

**MLDET**

| Part No. | Title | Page |
|---|---|---|
| MLDET2110P | E series Driver: L-frame | 223,226 |
| MLDET2210P | E series Driver: L-frame | 223,226 |
| MLDET2310P | E series Driver: L-frame | 223,226 |
| MLDET2510P | E series Driver: L-frame | 223,226 |

**MSMD (Low inertia)**

| Part No. | Title | Page |
|---|---|---|
| MSMD011G1A | MSMD 100 W Incremental encoder | 51 |
| MSMD011G1B | MSMD 100 W Incremental encoder | 51 |
| MSMD011G1C | MSMD 100 W Incremental encoder | 51 |
| MSMD011G1D | MSMD 100 W Incremental encoder | 51 |
| MSMD011G1N | MSMD 100 W Incremental encoder | 51 |
| MSMD011G1P | MSMD 100 W Incremental encoder | 51 |
| MSMD011G1Q | MSMD 100 W Incremental encoder | 51 |
| MSMD011G1R | MSMD 100 W Incremental encoder | 51 |
| MSMD011G1S | MSMD 100 W Incremental encoder | 51 |
| MSMD011G1T | MSMD 100 W Incremental encoder | 51 |
| MSMD011G1U | MSMD 100 W Incremental encoder | 51 |
| MSMD011G1V | MSMD 100 W Incremental encoder | 51 |
| MSMD011S1A | MSMD 100 W Absolute encoder | 51 |
| MSMD011S1B | MSMD 100 W Absolute encoder | 51 |
| MSMD011S1C | MSMD 100 W Absolute encoder | 51 |
| MSMD011S1D | MSMD 100 W Absolute encoder | 51 |
| MSMD011S1N | MSMD 100 W Absolute encoder | 51 |
| MSMD011S1P | MSMD 100 W Absolute encoder | 51 |
| MSMD011S1Q | MSMD 100 W Absolute encoder | 51 |
| MSMD011S1R | MSMD 100 W Absolute encoder | 51 |
| MSMD011S1S | MSMD 100 W Absolute encoder | 51 |
| MSMD011S1T | MSMD 100 W Absolute encoder | 51 |
| MSMD011S1U | MSMD 100 W Absolute encoder | 51 |
| MSMD011S1V | MSMD 100 W Absolute encoder | 51 |
| MSMD012G1A | MSMD 100 W Incremental encoder | 52 |
| MSMD012G1B | MSMD 100 W Incremental encoder | 52 |
| MSMD012G1C | MSMD 100 W Incremental encoder | 52 |
| MSMD012G1D | MSMD 100 W Incremental encoder | 52 |
| MSMD012G1N | MSMD 100 W Incremental encoder | 52 |
| MSMD012G1P | MSMD 100 W Incremental encoder | 52 |
| MSMD012G1Q | MSMD 100 W Incremental encoder | 52 |
| MSMD012G1R | MSMD 100 W Incremental encoder | 52 |
| MSMD012G1S | MSMD 100 W Incremental encoder | 52 |
| MSMD012G1T | MSMD 100 W Incremental encoder | 52 |
| MSMD012G1U | MSMD 100 W Incremental encoder | 52 |
| MSMD012G1V | MSMD 100 W Incremental encoder | 52 |
| MSMD012S1A | MSMD 100 W Absolute encoder | 52 |
| MSMD012S1B | MSMD 100 W Absolute encoder | 52 |
| MSMD012S1C | MSMD 100 W Absolute encoder | 52 |
| MSMD012S1D | MSMD 100 W Absolute encoder | 52 |
| MSMD012S1N | MSMD 100 W Absolute encoder | 52 |
| MSMD012S1P | MSMD 100 W Absolute encoder | 52 |
| MSMD012S1Q | MSMD 100 W Absolute encoder | 52 |
| MSMD012S1R | MSMD 100 W Absolute encoder | 52 |
| MSMD012S1S | MSMD 100 W Absolute encoder | 52 |
| MSMD012S1T | MSMD 100 W Absolute encoder | 52 |
| MSMD012S1U | MSMD 100 W Absolute encoder | 52 |
| MSMD012S1V | MSMD 100 W Absolute encoder | 52 |
| MSMD021G1A | MSMD 200 W Incremental encoder | 53 |
| MSMD021G1B | MSMD 200 W Incremental encoder | 53 |
| MSMD021G1C | MSMD 200 W Incremental encoder | 53 |
| MSMD021G1D | MSMD 200 W Incremental encoder | 53 |
| MSMD021G1N | MSMD 200 W Incremental encoder | 53 |
| MSMD021G1P | MSMD 200 W Incremental encoder | 53 |
| MSMD021G1Q | MSMD 200 W Incremental encoder | 53 |
| MSMD021G1R | MSMD 200 W Incremental encoder | 53 |
| MSMD021G1S | MSMD 200 W Incremental encoder | 53 |
| MSMD021G1T | MSMD 200 W Incremental encoder | 53 |
| MSMD021G1U | MSMD 200 W Incremental encoder | 53 |
| MSMD021G1V | MSMD 200 W Incremental encoder | 53 |
| MSMD021S1A | MSMD 200 W Absolute encoder | 53 |
| MSMD021S1B | MSMD 200 W Absolute encoder | 53 |
| MSMD021S1C | MSMD 200 W Absolute encoder | 53 |
| MSMD021S1D | MSMD 200 W Absolute encoder | 53 |
| MSMD021S1N | MSMD 200 W Absolute encoder | 53 |

**MSMD (Low inertia)**

| Part No. | Title | Page |
|---|---|---|
| MSMD021S1P | MSMD 200 W Absolute encoder | 53 |
| MSMD021S1Q | MSMD 200 W Absolute encoder | 53 |
| MSMD021S1R | MSMD 200 W Absolute encoder | 53 |
| MSMD021S1S | MSMD 200 W Absolute encoder | 53 |
| MSMD021S1T | MSMD 200 W Absolute encoder | 53 |
| MSMD021S1U | MSMD 200 W Absolute encoder | 53 |
| MSMD021S1V | MSMD 200 W Absolute encoder | 53 |
| MSMD022G1A | MSMD 200 W Incremental encoder | 54 |
| MSMD022G1B | MSMD 200 W Incremental encoder | 54 |
| MSMD022G1C | MSMD 200 W Incremental encoder | 54 |
| MSMD022G1D | MSMD 200 W Incremental encoder | 54 |
| MSMD022G1N | MSMD 200 W Incremental encoder | 54 |
| MSMD022G1P | MSMD 200 W Incremental encoder | 54 |
| MSMD022G1Q | MSMD 200 W Incremental encoder | 54 |
| MSMD022G1R | MSMD 200 W Incremental encoder | 54 |
| MSMD022G1S | MSMD 200 W Incremental encoder | 54 |
| MSMD022G1T | MSMD 200 W Incremental encoder | 54 |
| MSMD022G1U | MSMD 200 W Incremental encoder | 54 |
| MSMD022G1V | MSMD 200 W Incremental encoder | 54 |
| MSMD022S1A | MSMD 200 W Absolute encoder | 54 |
| MSMD022S1B | MSMD 200 W Absolute encoder | 54 |
| MSMD022S1C | MSMD 200 W Absolute encoder | 54 |
| MSMD022S1D | MSMD 200 W Absolute encoder | 54 |
| MSMD022S1N | MSMD 200 W Absolute encoder | 54 |
| MSMD022S1P | MSMD 200 W Absolute encoder | 54 |
| MSMD022S1Q | MSMD 200 W Absolute encoder | 54 |
| MSMD022S1R | MSMD 200 W Absolute encoder | 54 |
| MSMD022S1S | MSMD 200 W Absolute encoder | 54 |
| MSMD022S1T | MSMD 200 W Absolute encoder | 54 |
| MSMD022S1U | MSMD 200 W Absolute encoder | 54 |
| MSMD022S1V | MSMD 200 W Absolute encoder | 54 |
| MSMD041G1A | MSMD 400 W Incremental encoder | 55 |
| MSMD041G1B | MSMD 400 W Incremental encoder | 55 |
| MSMD041G1C | MSMD 400 W Incremental encoder | 55 |
| MSMD041G1D | MSMD 400 W Incremental encoder | 55 |
| MSMD041G1N | MSMD 400 W Incremental encoder | 55 |
| MSMD041G1P | MSMD 400 W Incremental encoder | 55 |
| MSMD041G1Q | MSMD 400 W Incremental encoder | 55 |
| MSMD041G1R | MSMD 400 W Incremental encoder | 55 |
| MSMD041G1S | MSMD 400 W Incremental encoder | 55 |
| MSMD041G1T | MSMD 400 W Incremental encoder | 55 |
| MSMD041G1U | MSMD 400 W Incremental encoder | 55 |
| MSMD041G1V | MSMD 400 W Incremental encoder | 55 |
| MSMD041S1A | MSMD 400 W Absolute encoder | 55 |
| MSMD041S1B | MSMD 400 W Absolute encoder | 55 |
| MSMD041S1C | MSMD 400 W Absolute encoder | 55 |
| MSMD041S1D | MSMD 400 W Absolute encoder | 55 |
| MSMD041S1N | MSMD 400 W Absolute encoder | 55 |
| MSMD041S1P | MSMD 400 W Absolute encoder | 55 |
| MSMD041S1Q | MSMD 400 W Absolute encoder | 55 |
| MSMD041S1R | MSMD 400 W Absolute encoder | 55 |
| MSMD041S1S | MSMD 400 W Absolute encoder | 55 |
| MSMD041S1T | MSMD 400 W Absolute encoder | 55 |
| MSMD041S1U | MSMD 400 W Absolute encoder | 55 |
| MSMD041S1V | MSMD 400 W Absolute encoder | 55 |
| MSMD042G1A | MSMD 400 W Incremental encoder | 56 |
| MSMD042G1B | MSMD 400 W Incremental encoder | 56 |
| MSMD042G1C | MSMD 400 W Incremental encoder | 56 |
| MSMD042G1D | MSMD 400 W Incremental encoder | 56 |
| MSMD042G1N | MSMD 400 W Incremental encoder | 56 |
| MSMD042G1P | MSMD 400 W Incremental encoder | 56 |
| MSMD042G1Q | MSMD 400 W Incremental encoder | 56 |
| MSMD042G1R | MSMD 400 W Incremental encoder | 56 |
| MSMD042G1S | MSMD 400 W Incremental encoder | 56 |
| MSMD042G1T | MSMD 400 W Incremental encoder | 56 |
| MSMD042G1U | MSMD 400 W Incremental encoder | 56 |
| MSMD042G1V | MSMD 400 W Incremental encoder | 56 |
| MSMD042S1A | MSMD 400 W Absolute encoder | 56 |
| MSMD042S1B | MSMD 400 W Absolute encoder | 56 |
| MSMD042S1C | MSMD 400 W Absolute encoder | 56 |
| MSMD042S1D | MSMD 400 W Absolute encoder | 56 |
| MSMD042S1N | MSMD 400 W Absolute encoder | 56 |

# Index
## (Alphabetical Order)


**MSMD (Low inertia)**

| Part No. | Title | Page |
|---|---|---|
| MSMD042S1P | MSMD 400 W Absolute encoder | 56 |
| MSMD042S1Q | MSMD 400 W Absolute encoder | 56 |
| MSMD042S1R | MSMD 400 W Absolute encoder | 56 |
| MSMD042S1S | MSMD 400 W Absolute encoder | 56 |
| MSMD042S1T | MSMD 400 W Absolute encoder | 56 |
| MSMD042S1U | MSMD 400 W Absolute encoder | 56 |
| MSMD042S1V | MSMD 400 W Absolute encoder | 56 |
| MSMD082G1A | MSMD 750 W Incremental encoder | 57 |
| MSMD082G1B | MSMD 750 W Incremental encoder | 57 |
| MSMD082G1C | MSMD 750 W Incremental encoder | 57 |
| MSMD082G1D | MSMD 750 W Incremental encoder | 57 |
| MSMD082G1N | MSMD 750 W Incremental encoder | 57 |
| MSMD082G1P | MSMD 750 W Incremental encoder | 57 |
| MSMD082G1Q | MSMD 750 W Incremental encoder | 57 |
| MSMD082G1R | MSMD 750 W Incremental encoder | 57 |
| MSMD082G1S | MSMD 750 W Incremental encoder | 57 |
| MSMD082G1T | MSMD 750 W Incremental encoder | 57 |
| MSMD082G1U | MSMD 750 W Incremental encoder | 57 |
| MSMD082G1V | MSMD 750 W Incremental encoder | 57 |
| MSMD082S1A | MSMD 750 W Absolute encoder | 57 |
| MSMD082S1B | MSMD 750 W Absolute encoder | 57 |
| MSMD082S1C | MSMD 750 W Absolute encoder | 57 |
| MSMD082S1D | MSMD 750 W Absolute encoder | 57 |
| MSMD082S1N | MSMD 750 W Absolute encoder | 57 |
| MSMD082S1P | MSMD 750 W Absolute encoder | 57 |
| MSMD082S1Q | MSMD 750 W Absolute encoder | 57 |
| MSMD082S1R | MSMD 750 W Absolute encoder | 57 |
| MSMD082S1S | MSMD 750 W Absolute encoder | 57 |
| MSMD082S1T | MSMD 750 W Absolute encoder | 57 |
| MSMD082S1U | MSMD 750 W Absolute encoder | 57 |
| MSMD082S1V | MSMD 750 W Absolute encoder | 57 |
| MSMD5AZG1A | MSMD 50 W Incremental encoder | 49,50 |
| MSMD5AZG1B | MSMD 50 W Incremental encoder | 49,50 |
| MSMD5AZG1C | MSMD 50 W Incremental encoder | 49,50 |
| MSMD5AZG1D | MSMD 50 W Incremental encoder | 49,50 |
| MSMD5AZG1N | MSMD 50 W Incremental encoder | 49,50 |
| MSMD5AZG1P | MSMD 50 W Incremental encoder | 49,50 |
| MSMD5AZG1Q | MSMD 50 W Incremental encoder | 49,50 |
| MSMD5AZG1R | MSMD 50 W Incremental encoder | 49,50 |
| MSMD5AZG1S | MSMD 50 W Incremental encoder | 49,50 |
| MSMD5AZG1T | MSMD 50 W Incremental encoder | 49,50 |
| MSMD5AZG1U | MSMD 50 W Incremental encoder | 49,50 |
| MSMD5AZG1V | MSMD 50 W Incremental encoder | 49,50 |
| MSMD5AZS1A | MSMD 50 W Absolute encoder | 49,50 |
| MSMD5AZS1B | MSMD 50 W Absolute encoder | 49,50 |
| MSMD5AZS1C | MSMD 50 W Absolute encoder | 49,50 |
| MSMD5AZS1D | MSMD 50 W Absolute encoder | 49,50 |
| MSMD5AZS1N | MSMD 50 W Absolute encoder | 49,50 |
| MSMD5AZS1P | MSMD 50 W Absolute encoder | 49,50 |
| MSMD5AZS1Q | MSMD 50 W Absolute encoder | 49,50 |
| MSMD5AZS1R | MSMD 50 W Absolute encoder | 49,50 |
| MSMD5AZS1S | MSMD 50 W Absolute encoder | 49,50 |
| MSMD5AZS1T | MSMD 50 W Absolute encoder | 49,50 |
| MSMD5AZS1U | MSMD 50 W Absolute encoder | 49,50 |
| MSMD5AZS1V | MSMD 50 W Absolute encoder | 49,50 |

**MSMD with Gear Reducer (Low inertia)**

| Part No. | Title | Page |
|---|---|---|
| MSMD011G31N | MSMD with reduction gear 100 W Incremental encoder | 141,148 |
| MSMD011G32N | MSMD with reduction gear 100 W Incremental encoder | 141,148 |
| MSMD011G33N | MSMD with reduction gear 100 W Incremental encoder | 141,148 |
| MSMD011G34N | MSMD with reduction gear 100 W Incremental encoder | 141,148 |
| MSMD011G41N | MSMD with reduction gear 100 W Incremental encoder | 141,148 |
| MSMD011G42N | MSMD with reduction gear 100 W Incremental encoder | 141,148 |
| MSMD011G43N | MSMD with reduction gear 100 W Incremental encoder | 141,148 |
| MSMD011G44N | MSMD with reduction gear 100 W Incremental encoder | 141,148 |
| MSMD011S31N | MSMD with reduction gear 100 W Absolute encoder | 141,148 |
| MSMD011S32N | MSMD with reduction gear 100 W Absolute encoder | 141,148 |
| MSMD011S33N | MSMD with reduction gear 100 W Absolute encoder | 141,148 |
| MSMD011S34N | MSMD with reduction gear 100 W Absolute encoder | 141,148 |
| MSMD011S41N | MSMD with reduction gear 100 W Absolute encoder | 141,148 |
| MSMD011S42N | MSMD with reduction gear 100 W Absolute encoder | 141,148 |

**MSMD with Gear Reducer (Low inertia)**

| Part No. | Title | Page |
|---|---|---|
| MSMD011S43N | MSMD with reduction gear 100 W Absolute encoder | 141,148 |
| MSMD011S44N | MSMD with reduction gear 100 W Absolute encoder | 141,148 |
| MSMD012G31N | MSMD with reduction gear 100 W Incremental encoder | 141,148 |
| MSMD012G32N | MSMD with reduction gear 100 W Incremental encoder | 141,148 |
| MSMD012G33N | MSMD with reduction gear 100 W Incremental encoder | 141,148 |
| MSMD012G34N | MSMD with reduction gear 100 W Incremental encoder | 141,148 |
| MSMD012G41N | MSMD with reduction gear 100 W Incremental encoder | 141,148 |
| MSMD012G42N | MSMD with reduction gear 100 W Incremental encoder | 141,148 |
| MSMD012G43N | MSMD with reduction gear 100 W Incremental encoder | 141,148 |
| MSMD012G44N | MSMD with reduction gear 100 W Incremental encoder | 141,148 |
| MSMD012S31N | MSMD with reduction gear 100 W Absolute encoder | 141,148 |
| MSMD012S32N | MSMD with reduction gear 100 W Absolute encoder | 141,148 |
| MSMD012S33N | MSMD with reduction gear 100 W Absolute encoder | 141,148 |
| MSMD012S34N | MSMD with reduction gear 100 W Absolute encoder | 141,148 |
| MSMD012S41N | MSMD with reduction gear 100 W Absolute encoder | 141,148 |
| MSMD012S42N | MSMD with reduction gear 100 W Absolute encoder | 141,148 |
| MSMD012S43N | MSMD with reduction gear 100 W Absolute encoder | 141,148 |
| MSMD012S44N | MSMD with reduction gear 100 W Absolute encoder | 141,148 |
| MSMD021G31N | MSMD with reduction gear 200 W Incremental encoder | 141,148 |
| MSMD021G32N | MSMD with reduction gear 200 W Incremental encoder | 141,148 |
| MSMD021G33N | MSMD with reduction gear 200 W Incremental encoder | 141,148 |
| MSMD021G34N | MSMD with reduction gear 200 W Incremental encoder | 141,148 |
| MSMD021G41N | MSMD with reduction gear 200 W Incremental encoder | 141,148 |
| MSMD021G42N | MSMD with reduction gear 200 W Incremental encoder | 141,148 |
| MSMD021G43N | MSMD with reduction gear 200 W Incremental encoder | 141,148 |
| MSMD021G44N | MSMD with reduction gear 200 W Incremental encoder | 141,148 |
| MSMD021S31N | MSMD with reduction gear 200 W Absolute encoder | 141,148 |
| MSMD021S32N | MSMD with reduction gear 200 W Absolute encoder | 141,148 |
| MSMD021S33N | MSMD with reduction gear 200 W Absolute encoder | 141,148 |
| MSMD021S34N | MSMD with reduction gear 200 W Absolute encoder | 141,148 |
| MSMD021S41N | MSMD with reduction gear 200 W Absolute encoder | 141,148 |
| MSMD021S42N | MSMD with reduction gear 200 W Absolute encoder | 141,148 |
| MSMD021S43N | MSMD with reduction gear 200 W Absolute encoder | 141,148 |
| MSMD021S44N | MSMD with reduction gear 200 W Absolute encoder | 141,148 |
| MSMD022G31N | MSMD with reduction gear 200 W Incremental encoder | 141,148 |
| MSMD022G32N | MSMD with reduction gear 200 W Incremental encoder | 141,148 |
| MSMD022G33N | MSMD with reduction gear 200 W Incremental encoder | 141,148 |
| MSMD022G34N | MSMD with reduction gear 200 W Incremental encoder | 141,148 |
| MSMD022G41N | MSMD with reduction gear 200 W Incremental encoder | 141,148 |
| MSMD022G42N | MSMD with reduction gear 200 W Incremental encoder | 141,148 |
| MSMD022G43N | MSMD with reduction gear 200 W Incremental encoder | 141,148 |
| MSMD022G44N | MSMD with reduction gear 200 W Incremental encoder | 141,148 |
| MSMD022S31N | MSMD with reduction gear 200 W Absolute encoder | 141,148 |
| MSMD022S32N | MSMD with reduction gear 200 W Absolute encoder | 141,148 |
| MSMD022S33N | MSMD with reduction gear 200 W Absolute encoder | 141,148 |
| MSMD022S34N | MSMD with reduction gear 200 W Absolute encoder | 141,148 |
| MSMD022S41N | MSMD with reduction gear 200 W Absolute encoder | 141,148 |
| MSMD022S42N | MSMD with reduction gear 200 W Absolute encoder | 141,148 |
| MSMD022S43N | MSMD with reduction gear 200 W Absolute encoder | 141,148 |
| MSMD022S44N | MSMD with reduction gear 200 W Absolute encoder | 141,148 |
| MSMD041G31N | MSMD with reduction gear 400 W Incremental encoder | 141,148 |
| MSMD041G32N | MSMD with reduction gear 400 W Incremental encoder | 141,148 |
| MSMD041G33N | MSMD with reduction gear 400 W Incremental encoder | 141,148 |
| MSMD041G34N | MSMD with reduction gear 400 W Incremental encoder | 141,148 |
| MSMD041G41N | MSMD with reduction gear 400 W Incremental encoder | 141,148 |
| MSMD041G42N | MSMD with reduction gear 400 W Incremental encoder | 141,148 |
| MSMD041G43N | MSMD with reduction gear 400 W Incremental encoder | 141,148 |
| MSMD041G44N | MSMD with reduction gear 400 W Incremental encoder | 141,148 |
| MSMD041S31N | MSMD with reduction gear 400 W Absolute encoder | 141,148 |
| MSMD041S32N | MSMD with reduction gear 400 W Absolute encoder | 141,148 |
| MSMD041S33N | MSMD with reduction gear 400 W Absolute encoder | 141,148 |
| MSMD041S34N | MSMD with reduction gear 400 W Absolute encoder | 141,148 |
| MSMD041S41N | MSMD with reduction gear 400 W Absolute encoder | 141,148 |
| MSMD041S42N | MSMD with reduction gear 400 W Absolute encoder | 141,148 |
| MSMD041S43N | MSMD with reduction gear 400 W Absolute encoder | 141,148 |
| MSMD041S44N | MSMD with reduction gear 400 W Absolute encoder | 141,148 |
| MSMD042G31N | MSMD with reduction gear 400 W Incremental encoder | 141,148 |
| MSMD042G32N | MSMD with reduction gear 400 W Incremental encoder | 141,148 |
| MSMD042G33N | MSMD with reduction gear 400 W Incremental encoder | 141,148 |
| MSMD042G34N | MSMD with reduction gear 400 W Incremental encoder | 141,148 |
| MSMD042G41N | MSMD with reduction gear 400 W Incremental encoder | 141,148 |
| MSMD042G42N | MSMD with reduction gear 400 W Incremental encoder | 141,148 |

**MSMD with Gear Reducer (Low inertia)**

| Part No. | Title | Page |
|---|---|---|
| MSMD042G43N | MSMD with reduction gear 400 W Incremental encoder | 141,148 |
| MSMD042G44N | MSMD with reduction gear 400 W Incremental encoder | 141,148 |
| MSMD042S31N | MSMD with reduction gear 400 W Absolute encoder | 141,148 |
| MSMD042S32N | MSMD with reduction gear 400 W Absolute encoder | 141,148 |
| MSMD042S33N | MSMD with reduction gear 400 W Absolute encoder | 141,148 |
| MSMD042S34N | MSMD with reduction gear 400 W Absolute encoder | 141,148 |
| MSMD042S41N | MSMD with reduction gear 400 W Absolute encoder | 141,148 |
| MSMD042S42N | MSMD with reduction gear 400 W Absolute encoder | 141,148 |
| MSMD042S43N | MSMD with reduction gear 400 W Absolute encoder | 141,148 |
| MSMD042S44N | MSMD with reduction gear 400 W Absolute encoder | 141,148 |
| MSMD082G31N | MSMD with reduction gear 750 W Incremental encoder | 141,148 |
| MSMD082G32N | MSMD with reduction gear 750 W Incremental encoder | 141,148 |
| MSMD082G33N | MSMD with reduction gear 750 W Incremental encoder | 141,148 |
| MSMD082G34N | MSMD with reduction gear 750 W Incremental encoder | 141,148 |
| MSMD082G41N | MSMD with reduction gear 750 W Incremental encoder | 141,148 |
| MSMD082G42N | MSMD with reduction gear 750 W Incremental encoder | 141,148 |
| MSMD082G43N | MSMD with reduction gear 750 W Incremental encoder | 141,148 |
| MSMD082G44N | MSMD with reduction gear 750 W Incremental encoder | 141,148 |
| MSMD082S31N | MSMD with reduction gear 750 W Absolute encoder | 141,148 |
| MSMD082S32N | MSMD with reduction gear 750 W Absolute encoder | 141,148 |
| MSMD082S33N | MSMD with reduction gear 750 W Absolute encoder | 141,148 |
| MSMD082S34N | MSMD with reduction gear 750 W Absolute encoder | 141,148 |
| MSMD082S41N | MSMD with reduction gear 750 W Absolute encoder | 141,148 |
| MSMD082S42N | MSMD with reduction gear 750 W Absolute encoder | 141,148 |
| MSMD082S43N | MSMD with reduction gear 750 W Absolute encoder | 141,148 |
| MSMD082S44N | MSMD with reduction gear 750 W Absolute encoder | 141,148 |

**MSME (Low inertia)**

| Part No. | Title | Page |
|---|---|---|
| MSME011G1A | MSME 100 W Incremental encoder | 67 |
| MSME011G1B | MSME 100 W Incremental encoder | 67 |
| MSME011G1C | MSME 100 W Incremental encoder | 67 |
| MSME011G1D | MSME 100 W Incremental encoder | 67 |
| MSME011G1N | MSME 100 W Incremental encoder | 67 |
| MSME011G1P | MSME 100 W Incremental encoder | 67 |
| MSME011G1Q | MSME 100 W Incremental encoder | 67 |
| MSME011G1R | MSME 100 W Incremental encoder | 67 |
| MSME011G1S | MSME 100 W Incremental encoder | 67 |
| MSME011G1T | MSME 100 W Incremental encoder | 67 |
| MSME011G1U | MSME 100 W Incremental encoder | 67 |
| MSME011G1V | MSME 100 W Incremental encoder | 67 |
| MSME011S1A | MSME 100 W Absolute encoder | 67 |
| MSME011S1B | MSME 100 W Absolute encoder | 67 |
| MSME011S1C | MSME 100 W Absolute encoder | 67 |
| MSME011S1D | MSME 100 W Absolute encoder | 67 |
| MSME011S1N | MSME 100 W Absolute encoder | 67 |
| MSME011S1P | MSME 100 W Absolute encoder | 67 |
| MSME011S1Q | MSME 100 W Absolute encoder | 67 |
| MSME011S1R | MSME 100 W Absolute encoder | 67 |
| MSME011S1S | MSME 100 W Absolute encoder | 67 |
| MSME011S1T | MSME 100 W Absolute encoder | 67 |
| MSME011S1U | MSME 100 W Absolute encoder | 67 |
| MSME011S1V | MSME 100 W Absolute encoder | 67 |
| MSME012G1A | MSME 100 W Incremental encoder | 68 |
| MSME012G1B | MSME 100 W Incremental encoder | 68 |
| MSME012G1C | MSME 100 W Incremental encoder | 68 |
| MSME012G1D | MSME 100 W Incremental encoder | 68 |
| MSME012G1N | MSME 100 W Incremental encoder | 68 |
| MSME012G1P | MSME 100 W Incremental encoder | 68 |
| MSME012G1Q | MSME 100 W Incremental encoder | 68 |
| MSME012G1R | MSME 100 W Incremental encoder | 68 |
| MSME012G1S | MSME 100 W Incremental encoder | 68 |
| MSME012G1T | MSME 100 W Incremental encoder | 68 |
| MSME012G1U | MSME 100 W Incremental encoder | 68 |
| MSME012G1V | MSME 100 W Incremental encoder | 68 |
| MSME012S1A | MSME 100 W Absolute encoder | 68 |
| MSME012S1B | MSME 100 W Absolute encoder | 68 |
| MSME012S1C | MSME 100 W Absolute encoder | 68 |
| MSME012S1D | MSME 100 W Absolute encoder | 68 |
| MSME012S1N | MSME 100 W Absolute encoder | 68 |
| MSME012S1P | MSME 100 W Absolute encoder | 68 |
| MSME012S1Q | MSME 100 W Absolute encoder | 68 |

**MSME (Low inertia)**

| Part No. | Title | Page |
|---|---|---|
| MSME012S1R | MSME 100 W Absolute encoder | 68 |
| MSME012S1S | MSME 100 W Absolute encoder | 68 |
| MSME012S1T | MSME 100 W Absolute encoder | 68 |
| MSME012S1U | MSME 100 W Absolute encoder | 68 |
| MSME012S1V | MSME 100 W Absolute encoder | 68 |
| MSME021G1A | MSME 200 W Incremental encoder | 69 |
| MSME021G1B | MSME 200 W Incremental encoder | 69 |
| MSME021G1C | MSME 200 W Incremental encoder | 69 |
| MSME021G1D | MSME 200 W Incremental encoder | 69 |
| MSME021G1N | MSME 200 W Incremental encoder | 69 |
| MSME021G1P | MSME 200 W Incremental encoder | 69 |
| MSME021G1Q | MSME 200 W Incremental encoder | 69 |
| MSME021G1R | MSME 200 W Incremental encoder | 69 |
| MSME021G1S | MSME 200 W Incremental encoder | 69 |
| MSME021G1T | MSME 200 W Incremental encoder | 69 |
| MSME021G1U | MSME 200 W Incremental encoder | 69 |
| MSME021G1V | MSME 200 W Incremental encoder | 69 |
| MSME021S1A | MSME 200 W Absolute encoder | 69 |
| MSME021S1B | MSME 200 W Absolute encoder | 69 |
| MSME021S1C | MSME 200 W Absolute encoder | 69 |
| MSME021S1D | MSME 200 W Absolute encoder | 69 |
| MSME021S1N | MSME 200 W Absolute encoder | 69 |
| MSME021S1P | MSME 200 W Absolute encoder | 69 |
| MSME021S1Q | MSME 200 W Absolute encoder | 69 |
| MSME021S1R | MSME 200 W Absolute encoder | 69 |
| MSME021S1S | MSME 200 W Absolute encoder | 69 |
| MSME021S1T | MSME 200 W Absolute encoder | 69 |
| MSME021S1U | MSME 200 W Absolute encoder | 69 |
| MSME021S1V | MSME 200 W Absolute encoder | 69 |
| MSME022G1A | MSME 200 W Incremental encoder | 70 |
| MSME022G1B | MSME 200 W Incremental encoder | 70 |
| MSME022G1C | MSME 200 W Incremental encoder | 70 |
| MSME022G1D | MSME 200 W Incremental encoder | 70 |
| MSME022G1N | MSME 200 W Incremental encoder | 70 |
| MSME022G1P | MSME 200 W Incremental encoder | 70 |
| MSME022G1Q | MSME 200 W Incremental encoder | 70 |
| MSME022G1R | MSME 200 W Incremental encoder | 70 |
| MSME022G1S | MSME 200 W Incremental encoder | 70 |
| MSME022G1T | MSME 200 W Incremental encoder | 70 |
| MSME022G1U | MSME 200 W Incremental encoder | 70 |
| MSME022G1V | MSME 200 W Incremental encoder | 70 |
| MSME022S1A | MSME 200 W Absolute encoder | 70 |
| MSME022S1B | MSME 200 W Absolute encoder | 70 |
| MSME022S1C | MSME 200 W Absolute encoder | 70 |
| MSME022S1D | MSME 200 W Absolute encoder | 70 |
| MSME022S1N | MSME 200 W Absolute encoder | 70 |
| MSME022S1P | MSME 200 W Absolute encoder | 70 |
| MSME022S1Q | MSME 200 W Absolute encoder | 70 |
| MSME022S1R | MSME 200 W Absolute encoder | 70 |
| MSME022S1S | MSME 200 W Absolute encoder | 70 |
| MSME022S1T | MSME 200 W Absolute encoder | 70 |
| MSME022S1U | MSME 200 W Absolute encoder | 70 |
| MSME022S1V | MSME 200 W Absolute encoder | 70 |
| MSME041G1A | MSME 400 W Incremental encoder | 71 |
| MSME041G1B | MSME 400 W Incremental encoder | 71 |
| MSME041G1C | MSME 400 W Incremental encoder | 71 |
| MSME041G1D | MSME 400 W Incremental encoder | 71 |
| MSME041G1N | MSME 400 W Incremental encoder | 71 |
| MSME041G1P | MSME 400 W Incremental encoder | 71 |
| MSME041G1Q | MSME 400 W Incremental encoder | 71 |
| MSME041G1R | MSME 400 W Incremental encoder | 71 |
| MSME041G1S | MSME 400 W Incremental encoder | 71 |
| MSME041G1T | MSME 400 W Incremental encoder | 71 |
| MSME041G1U | MSME 400 W Incremental encoder | 71 |
| MSME041G1V | MSME 400 W Incremental encoder | 71 |
| MSME041S1A | MSME 400 W Absolute encoder | 71 |
| MSME041S1B | MSME 400 W Absolute encoder | 71 |
| MSME041S1C | MSME 400 W Absolute encoder | 71 |
| MSME041S1D | MSME 400 W Absolute encoder | 71 |
| MSME041S1N | MSME 400 W Absolute encoder | 71 |
| MSME041S1P | MSME 400 W Absolute encoder | 71 |
| MSME041S1Q | MSME 400 W Absolute encoder | 71 |

# Index
## (Alphabetical Order)


| MSME (Low inertia) | | |
|---|---|---|
| Part No. | Title | Page |
| MSME041S1R | MSME 400 W Absolute encoder | 71 |
| MSME041S1S | MSME 400 W Absolute encoder | 71 |
| MSME041S1T | MSME 400 W Absolute encoder | 71 |
| MSME041S1U | MSME 400 W Absolute encoder | 71 |
| MSME041S1V | MSME 400 W Absolute encoder | 71 |
| MSME042G1A | MSME 400 W Incremental encoder | 72 |
| MSME042G1B | MSME 400 W Incremental encoder | 72 |
| MSME042G1C | MSME 400 W Incremental encoder | 72 |
| MSME042G1D | MSME 400 W Incremental encoder | 72 |
| MSME042G1N | MSME 400 W Incremental encoder | 72 |
| MSME042G1P | MSME 400 W Incremental encoder | 72 |
| MSME042G1Q | MSME 400 W Incremental encoder | 72 |
| MSME042G1R | MSME 400 W Incremental encoder | 72 |
| MSME042G1S | MSME 400 W Incremental encoder | 72 |
| MSME042G1T | MSME 400 W Incremental encoder | 72 |
| MSME042G1U | MSME 400 W Incremental encoder | 72 |
| MSME042G1V | MSME 400 W Incremental encoder | 72 |
| MSME042S1A | MSME 400 W Absolute encoder | 72 |
| MSME042S1B | MSME 400 W Absolute encoder | 72 |
| MSME042S1C | MSME 400 W Absolute encoder | 72 |
| MSME042S1D | MSME 400 W Absolute encoder | 72 |
| MSME042S1N | MSME 400 W Absolute encoder | 72 |
| MSME042S1P | MSME 400 W Absolute encoder | 72 |
| MSME042S1Q | MSME 400 W Absolute encoder | 72 |
| MSME042S1R | MSME 400 W Absolute encoder | 72 |
| MSME042S1S | MSME 400 W Absolute encoder | 72 |
| MSME042S1T | MSME 400 W Absolute encoder | 72 |
| MSME042S1U | MSME 400 W Absolute encoder | 72 |
| MSME042S1V | MSME 400 W Absolute encoder | 72 |
| MSME082G1A | MSME 750 W Incremental encoder | 73 |
| MSME082G1B | MSME 750 W Incremental encoder | 73 |
| MSME082G1C | MSME 750 W Incremental encoder | 73 |
| MSME082G1D | MSME 750 W Incremental encoder | 73 |
| MSME082G1N | MSME 750 W Incremental encoder | 73 |
| MSME082G1P | MSME 750 W Incremental encoder | 73 |
| MSME082G1Q | MSME 750 W Incremental encoder | 73 |
| MSME082G1R | MSME 750 W Incremental encoder | 73 |
| MSME082G1S | MSME 750 W Incremental encoder | 73 |
| MSME082G1T | MSME 750 W Incremental encoder | 73 |
| MSME082G1U | MSME 750 W Incremental encoder | 73 |
| MSME082G1V | MSME 750 W Incremental encoder | 73 |
| MSME082S1A | MSME 750 W Absolute encoder | 73 |
| MSME082S1B | MSME 750 W Absolute encoder | 73 |
| MSME082S1C | MSME 750 W Absolute encoder | 73 |
| MSME082S1D | MSME 750 W Absolute encoder | 73 |
| MSME082S1N | MSME 750 W Absolute encoder | 73 |
| MSME082S1P | MSME 750 W Absolute encoder | 73 |
| MSME082S1Q | MSME 750 W Absolute encoder | 73 |
| MSME082S1R | MSME 750 W Absolute encoder | 73 |
| MSME082S1S | MSME 750 W Absolute encoder | 73 |
| MSME082S1T | MSME 750 W Absolute encoder | 73 |
| MSME082S1U | MSME 750 W Absolute encoder | 73 |
| MSME082S1V | MSME 750 W Absolute encoder | 73 |
| MSME084G1C | MSME 750 W Incremental encoder | 104 |
| MSME084G1D | MSME 750 W Incremental encoder | 104 |
| MSME084G1G | MSME 750 W Incremental encoder | 104 |
| MSME084G1H | MSME 750 W Incremental encoder | 104 |
| MSME084GCC | MSME 750 W Incremental encoder | 104 |
| MSME084GCD | MSME 750 W Incremental encoder | 104 |
| MSME084GCG | MSME 750 W Incremental encoder | 104 |
| MSME084GCH | MSME 750 W Incremental encoder | 104 |
| MSME084S1C | MSME 750 W Absolute encoder | 104 |
| MSME084S1D | MSME 750 W Absolute encoder | 104 |
| MSME084S1G | MSME 750 W Absolute encoder | 104 |
| MSME084S1H | MSME 750 W Absolute encoder | 104 |
| MSME084SCC | MSME 750 W Absolute encoder | 104 |
| MSME084SCD | MSME 750 W Absolute encoder | 104 |
| MSME084SCG | MSME 750 W Absolute encoder | 104 |
| MSME084SCH | MSME 750 W Absolute encoder | 104 |
| MSME102G1C | MSME 1.0 kW Incremental encoder | 74 |
| MSME102G1D | MSME 1.0 kW Incremental encoder | 74 |
| MSME102G1G | MSME 1.0 kW Incremental encoder | 74 |

| MSME (Low inertia) | | |
|---|---|---|
| Part No. | Title | Page |
| MSME102G1H | MSME 1.0 kW Incremental encoder | 74 |
| MSME102GCC | MSME 1.0 kW Incremental encoder | 74 |
| MSME102GCCM | MSME 1.0 kW Incremental encoder | 158 |
| MSME102GCD | MSME 1.0 kW Incremental encoder | 74 |
| MSME102GCDM | MSME 1.0 kW Incremental encoder | 158 |
| MSME102GCG | MSME 1.0 kW Incremental encoder | 74 |
| MSME102GCGM | MSME 1.0 kW Incremental encoder | 158 |
| MSME102GCH | MSME 1.0 kW Incremental encoder | 74 |
| MSME102GCHM | MSME 1.0 kW Incremental encoder | 158 |
| MSME102S1C | MSME 1.0 kW Absolute encoder | 74 |
| MSME102S1D | MSME 1.0 kW Absolute encoder | 74 |
| MSME102S1G | MSME 1.0 kW Absolute encoder | 74 |
| MSME102S1H | MSME 1.0 kW Absolute encoder | 74 |
| MSME102SCC | MSME 1.0 kW Absolute encoder | 74 |
| MSME102SCCM | MSME 1.0 kW Absolute encoder | 158 |
| MSME102SCD | MSME 1.0 kW Absolute encoder | 74 |
| MSME102SCDM | MSME 1.0 kW Absolute encoder | 158 |
| MSME102SCG | MSME 1.0 kW Absolute encoder | 74 |
| MSME102SCGM | MSME 1.0 kW Absolute encoder | 158 |
| MSME102SCH | MSME 1.0 kW Absolute encoder | 74 |
| MSME102SCHM | MSME 1.0 kW Absolute encoder | 158 |
| MSME104G1C | MSME 1.0 kW Incremental encoder | 105 |
| MSME104G1D | MSME 1.0 kW Incremental encoder | 105 |
| MSME104G1G | MSME 1.0 kW Incremental encoder | 105 |
| MSME104G1H | MSME 1.0 kW Incremental encoder | 105 |
| MSME104GCC | MSME 1.0 kW Incremental encoder | 105 |
| MSME104GCD | MSME 1.0 kW Incremental encoder | 105 |
| MSME104GCG | MSME 1.0 kW Incremental encoder | 105 |
| MSME104GCH | MSME 1.0 kW Incremental encoder | 105 |
| MSME104S1C | MSME 1.0 kW Absolute encoder | 105 |
| MSME104S1D | MSME 1.0 kW Absolute encoder | 105 |
| MSME104S1G | MSME 1.0 kW Absolute encoder | 105 |
| MSME104S1H | MSME 1.0 kW Absolute encoder | 105 |
| MSME104SCC | MSME 1.0 kW Absolute encoder | 105 |
| MSME104SCD | MSME 1.0 kW Absolute encoder | 105 |
| MSME104SCG | MSME 1.0 kW Absolute encoder | 105 |
| MSME104SCH | MSME 1.0 kW Absolute encoder | 105 |
| MSME152G1C | MSME 1.5 kW Incremental encoder | 75 |
| MSME152G1D | MSME 1.5 kW Incremental encoder | 75 |
| MSME152G1G | MSME 1.5 kW Incremental encoder | 75 |
| MSME152G1H | MSME 1.5 kW Incremental encoder | 75 |
| MSME152GCC | MSME 1.5 kW Incremental encoder | 75 |
| MSME152GCCM | MSME 1.5 kW Incremental encoder | 159 |
| MSME152GCD | MSME 1.5 kW Incremental encoder | 75 |
| MSME152GCDM | MSME 1.5 kW Incremental encoder | 159 |
| MSME152GCG | MSME 1.5 kW Incremental encoder | 75 |
| MSME152GCGM | MSME 1.5 kW Incremental encoder | 159 |
| MSME152GCH | MSME 1.5 kW Incremental encoder | 75 |
| MSME152GCHM | MSME 1.5 kW Incremental encoder | 159 |
| MSME152S1C | MSME 1.5 kW Absolute encoder | 75 |
| MSME152S1D | MSME 1.5 kW Absolute encoder | 75 |
| MSME152S1G | MSME 1.5 kW Absolute encoder | 75 |
| MSME152S1H | MSME 1.5 kW Absolute encoder | 75 |
| MSME152SCC | MSME 1.5 kW Absolute encoder | 75 |
| MSME152SCCM | MSME 1.5 kW Absolute encoder | 159 |
| MSME152SCD | MSME 1.5 kW Absolute encoder | 75 |
| MSME152SCDM | MSME 1.5 kW Absolute encoder | 159 |
| MSME152SCG | MSME 1.5 kW Absolute encoder | 75 |
| MSME152SCGM | MSME 1.5 kW Absolute encoder | 159 |
| MSME152SCH | MSME 1.5 kW Absolute encoder | 75 |
| MSME152SCHM | MSME 1.5 kW Absolute encoder | 159 |
| MSME154G1C | MSME 1.5 kW Incremental encoder | 106 |
| MSME154G1D | MSME 1.5 kW Incremental encoder | 106 |
| MSME154G1G | MSME 1.5 kW Incremental encoder | 106 |
| MSME154G1H | MSME 1.5 kW Incremental encoder | 106 |
| MSME154GCC | MSME 1.5 kW Incremental encoder | 106 |
| MSME154GCD | MSME 1.5 kW Incremental encoder | 106 |
| MSME154GCG | MSME 1.5 kW Incremental encoder | 106 |
| MSME154GCH | MSME 1.5 kW Incremental encoder | 106 |
| MSME154S1C | MSME 1.5 kW Absolute encoder | 106 |
| MSME154S1D | MSME 1.5 kW Absolute encoder | 106 |
| MSME154S1G | MSME 1.5 kW Absolute encoder | 106 |

| MSME (Low inertia) | | |
|---|---|---|
| Part No. | Title | Page |
| MSME154S1H | MSME 1.5 kW Absolute encoder | 106 |
| MSME154SCC | MSME 1.5 kW Absolute encoder | 106 |
| MSME154SCD | MSME 1.5 kW Absolute encoder | 106 |
| MSME154SCG | MSME 1.5 kW Absolute encoder | 106 |
| MSME154SCH | MSME 1.5 kW Absolute encoder | 106 |
| MSME202G1C | MSME 2.0 kW Incremental encoder | 76 |
| MSME202G1D | MSME 2.0 kW Incremental encoder | 76 |
| MSME202G1G | MSME 2.0 kW Incremental encoder | 76 |
| MSME202G1H | MSME 2.0 kW Incremental encoder | 76 |
| MSME202GCC | MSME 2.0 kW Incremental encoder | 76 |
| MSME202GCCM | MSME 2.0 kW Incremental encoder | 160 |
| MSME202GCD | MSME 2.0 kW Incremental encoder | 76 |
| MSME202GCDM | MSME 2.0 kW Incremental encoder | 160 |
| MSME202GCG | MSME 2.0 kW Incremental encoder | 76 |
| MSME202GCGM | MSME 2.0 kW Incremental encoder | 160 |
| MSME202GCH | MSME 2.0 kW Incremental encoder | 76 |
| MSME202GCHM | MSME 2.0 kW Incremental encoder | 160 |
| MSME202S1C | MSME 2.0 kW Absolute encoder | 76 |
| MSME202S1D | MSME 2.0 kW Absolute encoder | 76 |
| MSME202S1G | MSME 2.0 kW Absolute encoder | 76 |
| MSME202S1H | MSME 2.0 kW Absolute encoder | 76 |
| MSME202SCC | MSME 2.0 kW Absolute encoder | 76 |
| MSME202SCCM | MSME 2.0 kW Absolute encoder | 160 |
| MSME202SCD | MSME 2.0 kW Absolute encoder | 76 |
| MSME202SCDM | MSME 2.0 kW Absolute encoder | 160 |
| MSME202SCG | MSME 2.0 kW Absolute encoder | 76 |
| MSME202SCGM | MSME 2.0 kW Absolute encoder | 160 |
| MSME202SCH | MSME 2.0 kW Absolute encoder | 76 |
| MSME202SCHM | MSME 2.0 kW Absolute encoder | 160 |
| MSME204G1C | MSME 2.0 kW Incremental encoder | 107 |
| MSME204G1D | MSME 2.0 kW Incremental encoder | 107 |
| MSME204G1G | MSME 2.0 kW Incremental encoder | 107 |
| MSME204G1H | MSME 2.0 kW Incremental encoder | 107 |
| MSME204GCC | MSME 2.0 kW Incremental encoder | 107 |
| MSME204GCD | MSME 2.0 kW Incremental encoder | 107 |
| MSME204GCG | MSME 2.0 kW Incremental encoder | 107 |
| MSME204GCH | MSME 2.0 kW Incremental encoder | 107 |
| MSME204S1C | MSME 2.0 kW Absolute encoder | 107 |
| MSME204S1D | MSME 2.0 kW Absolute encoder | 107 |
| MSME204S1G | MSME 2.0 kW Absolute encoder | 107 |
| MSME204S1H | MSME 2.0 kW Absolute encoder | 107 |
| MSME204SCC | MSME 2.0 kW Absolute encoder | 107 |
| MSME204SCD | MSME 2.0 kW Absolute encoder | 107 |
| MSME204SCG | MSME 2.0 kW Absolute encoder | 107 |
| MSME204SCH | MSME 2.0 kW Absolute encoder | 107 |
| MSME302G1C | MSME 3.0 kW Incremental encoder | 77 |
| MSME302G1D | MSME 3.0 kW Incremental encoder | 77 |
| MSME302G1G | MSME 3.0 kW Incremental encoder | 77 |
| MSME302G1H | MSME 3.0 kW Incremental encoder | 77 |
| MSME302GCC | MSME 3.0 kW Incremental encoder | 77 |
| MSME302GCCM | MSME 3.0 kW Incremental encoder | 161 |
| MSME302GCD | MSME 3.0 kW Incremental encoder | 77 |
| MSME302GCDM | MSME 3.0 kW Incremental encoder | 161 |
| MSME302GCG | MSME 3.0 kW Incremental encoder | 77 |
| MSME302GCGM | MSME 3.0 kW Incremental encoder | 161 |
| MSME302GCH | MSME 3.0 kW Incremental encoder | 77 |
| MSME302GCHM | MSME 3.0 kW Incremental encoder | 161 |
| MSME302S1C | MSME 3.0 kW Absolute encoder | 77 |
| MSME302S1D | MSME 3.0 kW Absolute encoder | 77 |
| MSME302S1G | MSME 3.0 kW Absolute encoder | 77 |
| MSME302S1H | MSME 3.0 kW Absolute encoder | 77 |
| MSME302SCC | MSME 3.0 kW Absolute encoder | 77 |
| MSME302SCCM | MSME 3.0 kW Absolute encoder | 161 |
| MSME302SCD | MSME 3.0 kW Absolute encoder | 77 |
| MSME302SCDM | MSME 3.0 kW Absolute encoder | 161 |
| MSME302SCG | MSME 3.0 kW Absolute encoder | 77 |
| MSME302SCGM | MSME 3.0 kW Absolute encoder | 161 |
| MSME302SCH | MSME 3.0 kW Absolute encoder | 77 |
| MSME302SCHM | MSME 3.0 kW Absolute encoder | 161 |
| MSME304G1C | MSME 3.0 kW Incremental encoder | 108 |
| MSME304G1D | MSME 3.0 kW Incremental encoder | 108 |
| MSME304G1G | MSME 3.0 kW Incremental encoder | 108 |

| MSME (Low inertia) | | |
|---|---|---|
| Part No. | Title | Page |
| MSME304G1H | MSME 3.0 kW Incremental encoder | 108 |
| MSME304GCC | MSME 3.0 kW Incremental encoder | 108 |
| MSME304GCD | MSME 3.0 kW Incremental encoder | 108 |
| MSME304GCG | MSME 3.0 kW Incremental encoder | 108 |
| MSME304GCH | MSME 3.0 kW Incremental encoder | 108 |
| MSME304S1C | MSME 3.0 kW Absolute encoder | 108 |
| MSME304S1D | MSME 3.0 kW Absolute encoder | 108 |
| MSME304S1G | MSME 3.0 kW Absolute encoder | 108 |
| MSME304S1H | MSME 3.0 kW Absolute encoder | 108 |
| MSME304SCC | MSME 3.0 kW Absolute encoder | 108 |
| MSME304SCD | MSME 3.0 kW Absolute encoder | 108 |
| MSME304SCG | MSME 3.0 kW Absolute encoder | 108 |
| MSME304SCH | MSME 3.0 kW Absolute encoder | 108 |
| MSME402G1C | MSME 4.0 kW Incremental encoder | 78 |
| MSME402G1D | MSME 4.0 kW Incremental encoder | 78 |
| MSME402G1G | MSME 4.0 kW Incremental encoder | 78 |
| MSME402G1H | MSME 4.0 kW Incremental encoder | 78 |
| MSME402GCC | MSME 4.0 kW Incremental encoder | 78 |
| MSME402GCCM | MSME 4.0 kW Incremental encoder | 162 |
| MSME402GCD | MSME 4.0 kW Incremental encoder | 78 |
| MSME402GCDM | MSME 4.0 kW Incremental encoder | 162 |
| MSME402GCG | MSME 4.0 kW Incremental encoder | 78 |
| MSME402GCGM | MSME 4.0 kW Incremental encoder | 162 |
| MSME402GCH | MSME 4.0 kW Incremental encoder | 78 |
| MSME402GCHM | MSME 4.0 kW Incremental encoder | 162 |
| MSME402S1C | MSME 4.0 kW Absolute encoder | 78 |
| MSME402S1D | MSME 4.0 kW Absolute encoder | 78 |
| MSME402S1G | MSME 4.0 kW Absolute encoder | 78 |
| MSME402S1H | MSME 4.0 kW Absolute encoder | 78 |
| MSME402SCC | MSME 4.0 kW Absolute encoder | 78 |
| MSME402SCCM | MSME 4.0 kW Absolute encoder | 162 |
| MSME402SCD | MSME 4.0 kW Absolute encoder | 78 |
| MSME402SCDM | MSME 4.0 kW Absolute encoder | 162 |
| MSME402SCG | MSME 4.0 kW Absolute encoder | 78 |
| MSME402SCGM | MSME 4.0 kW Absolute encoder | 162 |
| MSME402SCH | MSME 4.0 kW Absolute encoder | 78 |
| MSME402SCHM | MSME 4.0 kW Absolute encoder | 162 |
| MSME404G1C | MSME 4.0 kW Incremental encoder | 109 |
| MSME404G1D | MSME 4.0 kW Incremental encoder | 109 |
| MSME404G1G | MSME 4.0 kW Incremental encoder | 109 |
| MSME404G1H | MSME 4.0 kW Incremental encoder | 109 |
| MSME404GCC | MSME 4.0 kW Incremental encoder | 109 |
| MSME404GCD | MSME 4.0 kW Incremental encoder | 109 |
| MSME404GCG | MSME 4.0 kW Incremental encoder | 109 |
| MSME404GCH | MSME 4.0 kW Incremental encoder | 109 |
| MSME404S1C | MSME 4.0 kW Absolute encoder | 109 |
| MSME404S1D | MSME 4.0 kW Absolute encoder | 109 |
| MSME404S1G | MSME 4.0 kW Absolute encoder | 109 |
| MSME404S1H | MSME 4.0 kW Absolute encoder | 109 |
| MSME404SCC | MSME 4.0 kW Absolute encoder | 109 |
| MSME404SCD | MSME 4.0 kW Absolute encoder | 109 |
| MSME404SCG | MSME 4.0 kW Absolute encoder | 109 |
| MSME404SCH | MSME 4.0 kW Absolute encoder | 109 |
| MSME502G1C | MSME 5.0 kW Incremental encoder | 79 |
| MSME502G1D | MSME 5.0 kW Incremental encoder | 79 |
| MSME502G1G | MSME 5.0 kW Incremental encoder | 79 |
| MSME502G1H | MSME 5.0 kW Incremental encoder | 79 |
| MSME502GCC | MSME 5.0 kW Incremental encoder | 79 |
| MSME502GCCM | MSME 5.0 kW Incremental encoder | 163 |
| MSME502GCD | MSME 5.0 kW Incremental encoder | 79 |
| MSME502GCDM | MSME 5.0 kW Incremental encoder | 163 |
| MSME502GCG | MSME 5.0 kW Incremental encoder | 79 |
| MSME502GCGM | MSME 5.0 kW Incremental encoder | 163 |
| MSME502GCH | MSME 5.0 kW Incremental encoder | 79 |
| MSME502GCHM | MSME 5.0 kW Incremental encoder | 163 |
| MSME502S1C | MSME 5.0 kW Absolute encoder | 79 |
| MSME502S1D | MSME 5.0 kW Absolute encoder | 79 |
| MSME502S1G | MSME 5.0 kW Absolute encoder | 79 |
| MSME502S1H | MSME 5.0 kW Absolute encoder | 79 |
| MSME502SCC | MSME 5.0 kW Absolute encoder | 79 |
| MSME502SCCM | MSME 5.0 kW Absolute encoder | 163 |
| MSME502SCD | MSME 5.0 kW Absolute encoder | 79 |

# Index
## (Alphabetical Order)


**MSME (Low inertia)**

| Part No. | Title | Page |
|---|---|---|
| MSME502SCDM | MSME 5.0 kW Absolute encoder | 163 |
| MSME502SCG | MSME 5.0 kW Absolute encoder | 79 |
| MSME502SCGM | MSME 5.0 kW Absolute encoder | 163 |
| MSME502SCH | MSME 5.0 kW Absolute encoder | 79 |
| MSME502SCHM | MSME 5.0 kW Absolute encoder | 163 |
| MSME504G1C | MSME 5.0 kW Incremental encoder | 110 |
| MSME504G1D | MSME 5.0 kW Incremental encoder | 110 |
| MSME504G1G | MSME 5.0 kW Incremental encoder | 110 |
| MSME504G1H | MSME 5.0 kW Incremental encoder | 110 |
| MSME504GCC | MSME 5.0 kW Incremental encoder | 110 |
| MSME504GCD | MSME 5.0 kW Incremental encoder | 110 |
| MSME504GCG | MSME 5.0 kW Incremental encoder | 110 |
| MSME504GCH | MSME 5.0 kW Incremental encoder | 110 |
| MSME504S1C | MSME 5.0 kW Absolute encoder | 110 |
| MSME504S1D | MSME 5.0 kW Absolute encoder | 110 |
| MSME504S1G | MSME 5.0 kW Absolute encoder | 110 |
| MSME504S1H | MSME 5.0 kW Absolute encoder | 110 |
| MSME504SCC | MSME 5.0 kW Absolute encoder | 110 |
| MSME504SCD | MSME 5.0 kW Absolute encoder | 110 |
| MSME504SCG | MSME 5.0 kW Absolute encoder | 110 |
| MSME504SCH | MSME 5.0 kW Absolute encoder | 110 |
| MSME5AZG1A | MSME 50 W Incremental encoder | 65,66 |
| MSME5AZG1B | MSME 50 W Incremental encoder | 65,66 |
| MSME5AZG1C | MSME 50 W Incremental encoder | 65,66 |
| MSME5AZG1D | MSME 50 W Incremental encoder | 65,66 |
| MSME5AZG1N | MSME 50 W Incremental encoder | 65,66 |
| MSME5AZG1P | MSME 50 W Incremental encoder | 65,66 |
| MSME5AZG1Q | MSME 50 W Incremental encoder | 65,66 |
| MSME5AZG1R | MSME 50 W Incremental encoder | 65,66 |
| MSME5AZG1S | MSME 50 W Incremental encoder | 65,66 |
| MSME5AZG1T | MSME 50 W Incremental encoder | 65,66 |
| MSME5AZG1U | MSME 50 W Incremental encoder | 65,66 |
| MSME5AZG1V | MSME 50 W Incremental encoder | 65,66 |
| MSME5AZS1A | MSME 50 W Absolute encoder | 65,66 |
| MSME5AZS1B | MSME 50 W Absolute encoder | 65,66 |
| MSME5AZS1C | MSME 50 W Absolute encoder | 65,66 |
| MSME5AZS1D | MSME 50 W Absolute encoder | 65,66 |
| MSME5AZS1N | MSME 50 W Absolute encoder | 65,66 |
| MSME5AZS1P | MSME 50 W Absolute encoder | 65,66 |
| MSME5AZS1Q | MSME 50 W Absolute encoder | 65,66 |
| MSME5AZS1R | MSME 50 W Absolute encoder | 65,66 |
| MSME5AZS1S | MSME 50 W Absolute encoder | 65,66 |
| MSME5AZS1T | MSME 50 W Absolute encoder | 65,66 |
| MSME5AZS1U | MSME 50 W Absolute encoder | 65,66 |
| MSME5AZS1V | MSME 50 W Absolute encoder | 65,66 |

**MSME with Gear Reducer (Low inertia)**

| Part No. | Title | Page |
|---|---|---|
| MSME011G31N | MSME with reduction gear 100 W Incremental encoder | 141,147 |
| MSME011G32N | MSME with reduction gear 100 W Incremental encoder | 141,147 |
| MSME011G33N | MSME with reduction gear 100 W Incremental encoder | 141,147 |
| MSME011G34N | MSME with reduction gear 100 W Incremental encoder | 141,147 |
| MSME011G41N | MSME with reduction gear 100 W Incremental encoder | 141,147 |
| MSME011G42N | MSME with reduction gear 100 W Incremental encoder | 141,147 |
| MSME011G43N | MSME with reduction gear 100 W Incremental encoder | 141,147 |
| MSME011G44N | MSME with reduction gear 100 W Incremental encoder | 141,147 |
| MSME011S31N | MSME with reduction gear 100 W Absolute encoder | 141,147 |
| MSME011S32N | MSME with reduction gear 100 W Absolute encoder | 141,147 |
| MSME011S33N | MSME with reduction gear 100 W Absolute encoder | 141,147 |
| MSME011S34N | MSME with reduction gear 100 W Absolute encoder | 141,147 |
| MSME011S41N | MSME with reduction gear 100 W Absolute encoder | 141,147 |
| MSME011S42N | MSME with reduction gear 100 W Absolute encoder | 141,147 |
| MSME011S43N | MSME with reduction gear 100 W Absolute encoder | 141,147 |
| MSME011S44N | MSME with reduction gear 100 W Absolute encoder | 141,147 |
| MSME012G31N | MSME with reduction gear 100 W Incremental encoder | 141,147 |
| MSME012G32N | MSME with reduction gear 100 W Incremental encoder | 141,147 |
| MSME012G33N | MSME with reduction gear 100 W Incremental encoder | 141,147 |
| MSME012G34N | MSME with reduction gear 100 W Incremental encoder | 141,147 |
| MSME012G41N | MSME with reduction gear 100 W Incremental encoder | 141,147 |
| MSME012G42N | MSME with reduction gear 100 W Incremental encoder | 141,147 |
| MSME012G43N | MSME with reduction gear 100 W Incremental encoder | 141,147 |
| MSME012G44N | MSME with reduction gear 100 W Incremental encoder | 141,147 |

**MSME with Gear Reducer (Low inertia)**

| Part No. | Title | Page |
|---|---|---|
| MSME012S31N | MSME with reduction gear 100 W Absolute encoder | 141,147 |
| MSME012S32N | MSME with reduction gear 100 W Absolute encoder | 141,147 |
| MSME012S33N | MSME with reduction gear 100 W Absolute encoder | 141,147 |
| MSME012S34N | MSME with reduction gear 100 W Absolute encoder | 141,147 |
| MSME012S41N | MSME with reduction gear 100 W Absolute encoder | 141,147 |
| MSME012S42N | MSME with reduction gear 100 W Absolute encoder | 141,147 |
| MSME012S43N | MSME with reduction gear 100 W Absolute encoder | 141,147 |
| MSME012S44N | MSME with reduction gear 100 W Absolute encoder | 141,147 |
| MSME021G31N | MSME with reduction gear 200 W Incremental encoder | 141,147 |
| MSME021G32N | MSME with reduction gear 200 W Incremental encoder | 141,147 |
| MSME021G33N | MSME with reduction gear 200 W Incremental encoder | 141,147 |
| MSME021G34N | MSME with reduction gear 200 W Incremental encoder | 141,147 |
| MSME021G41N | MSME with reduction gear 200 W Incremental encoder | 141,147 |
| MSME021G42N | MSME with reduction gear 200 W Incremental encoder | 141,147 |
| MSME021G43N | MSME with reduction gear 200 W Incremental encoder | 141,147 |
| MSME021G44N | MSME with reduction gear 200 W Incremental encoder | 141,147 |
| MSME021S31N | MSME with reduction gear 200 W Absolute encoder | 141,147 |
| MSME021S32N | MSME with reduction gear 200 W Absolute encoder | 141,147 |
| MSME021S33N | MSME with reduction gear 200 W Absolute encoder | 141,147 |
| MSME021S34N | MSME with reduction gear 200 W Absolute encoder | 141,147 |
| MSME021S41N | MSME with reduction gear 200 W Absolute encoder | 141,147 |
| MSME021S42N | MSME with reduction gear 200 W Absolute encoder | 141,147 |
| MSME021S43N | MSME with reduction gear 200 W Absolute encoder | 141,147 |
| MSME021S44N | MSME with reduction gear 200 W Absolute encoder | 141,147 |
| MSME022G31N | MSME with reduction gear 200 W Incremental encoder | 141,147 |
| MSME022G32N | MSME with reduction gear 200 W Incremental encoder | 141,147 |
| MSME022G33N | MSME with reduction gear 200 W Incremental encoder | 141,147 |
| MSME022G34N | MSME with reduction gear 200 W Incremental encoder | 141,147 |
| MSME022G41N | MSME with reduction gear 200 W Incremental encoder | 141,147 |
| MSME022G42N | MSME with reduction gear 200 W Incremental encoder | 141,147 |
| MSME022G43N | MSME with reduction gear 200 W Incremental encoder | 141,147 |
| MSME022G44N | MSME with reduction gear 200 W Incremental encoder | 141,147 |
| MSME022S31N | MSME with reduction gear 200 W Absolute encoder | 141,147 |
| MSME022S32N | MSME with reduction gear 200 W Absolute encoder | 141,147 |
| MSME022S33N | MSME with reduction gear 200 W Absolute encoder | 141,147 |
| MSME022S34N | MSME with reduction gear 200 W Absolute encoder | 141,147 |
| MSME022S41N | MSME with reduction gear 200 W Absolute encoder | 141,147 |
| MSME022S42N | MSME with reduction gear 200 W Absolute encoder | 141,147 |
| MSME022S43N | MSME with reduction gear 200 W Absolute encoder | 141,147 |
| MSME022S44N | MSME with reduction gear 200 W Absolute encoder | 141,147 |
| MSME041G31N | MSME with reduction gear 400 W Incremental encoder | 141,147 |
| MSME041G32N | MSME with reduction gear 400 W Incremental encoder | 141,147 |
| MSME041G33N | MSME with reduction gear 400 W Incremental encoder | 141,147 |
| MSME041G34N | MSME with reduction gear 400 W Incremental encoder | 141,147 |
| MSME041G41N | MSME with reduction gear 400 W Incremental encoder | 141,147 |
| MSME041G42N | MSME with reduction gear 400 W Incremental encoder | 141,147 |
| MSME041G43N | MSME with reduction gear 400 W Incremental encoder | 141,147 |
| MSME041G44N | MSME with reduction gear 400 W Incremental encoder | 141,147 |
| MSME041S31N | MSME with reduction gear 400 W Absolute encoder | 141,147 |
| MSME041S32N | MSME with reduction gear 400 W Absolute encoder | 141,147 |
| MSME041S33N | MSME with reduction gear 400 W Absolute encoder | 141,147 |
| MSME041S34N | MSME with reduction gear 400 W Absolute encoder | 141,147 |
| MSME041S41N | MSME with reduction gear 400 W Absolute encoder | 141,147 |
| MSME041S42N | MSME with reduction gear 400 W Absolute encoder | 141,147 |
| MSME041S43N | MSME with reduction gear 400 W Absolute encoder | 141,147 |
| MSME041S44N | MSME with reduction gear 400 W Absolute encoder | 141,147 |
| MSME042G31N | MSME with reduction gear 400 W Incremental encoder | 141,147 |
| MSME042G32N | MSME with reduction gear 400 W Incremental encoder | 141,147 |
| MSME042G33N | MSME with reduction gear 400 W Incremental encoder | 141,147 |
| MSME042G34N | MSME with reduction gear 400 W Incremental encoder | 141,147 |
| MSME042G41N | MSME with reduction gear 400 W Incremental encoder | 141,147 |
| MSME042G42N | MSME with reduction gear 400 W Incremental encoder | 141,147 |
| MSME042G43N | MSME with reduction gear 400 W Incremental encoder | 141,147 |
| MSME042G44N | MSME with reduction gear 400 W Incremental encoder | 141,147 |
| MSME042S31N | MSME with reduction gear 400 W Absolute encoder | 141,147 |
| MSME042S32N | MSME with reduction gear 400 W Absolute encoder | 141,147 |
| MSME042S33N | MSME with reduction gear 400 W Absolute encoder | 141,147 |
| MSME042S34N | MSME with reduction gear 400 W Absolute encoder | 141,147 |
| MSME042S41N | MSME with reduction gear 400 W Absolute encoder | 141,147 |
| MSME042S42N | MSME with reduction gear 400 W Absolute encoder | 141,147 |
| MSME042S43N | MSME with reduction gear 400 W Absolute encoder | 141,147 |
| MSME042S44N | MSME with reduction gear 400 W Absolute encoder | 141,147 |





**MSME with Gear Reducer (Low inertia)**

| Part No. | Title | Page |
|---|---|---|
| MSME082G31N | MSME with reduction gear 750 W Incremental encoder | 141,147 |
| MSME082G32N | MSME with reduction gear 750 W Incremental encoder | 141,147 |
| MSME082G33N | MSME with reduction gear 750 W Incremental encoder | 141,147 |
| MSME082G34N | MSME with reduction gear 750 W Incremental encoder | 141,147 |
| MSME082G41N | MSME with reduction gear 750 W Incremental encoder | 141,147 |
| MSME082G42N | MSME with reduction gear 750 W Incremental encoder | 141,147 |
| MSME082G43N | MSME with reduction gear 750 W Incremental encoder | 141,147 |
| MSME082G44N | MSME with reduction gear 750 W Incremental encoder | 141,147 |
| MSME082S31N | MSME with reduction gear 750 W Absolute encoder | 141,147 |
| MSME082S32N | MSME with reduction gear 750 W Absolute encoder | 141,147 |
| MSME082S33N | MSME with reduction gear 750 W Absolute encoder | 141,147 |
| MSME082S34N | MSME with reduction gear 750 W Absolute encoder | 141,147 |
| MSME082S41N | MSME with reduction gear 750 W Absolute encoder | 141,147 |
| MSME082S42N | MSME with reduction gear 750 W Absolute encoder | 141,147 |
| MSME082S43N | MSME with reduction gear 750 W Absolute encoder | 141,147 |
| MSME082S44N | MSME with reduction gear 750 W Absolute encoder | 141,147 |

**MSMJ (Low inertia)**

| Part No. | Title | Page |
|---|---|---|
| MSMJ022G1A | MSMJ 200 W Incremental encoder | 155 |
| MSMJ022G1B | MSMJ 200 W Incremental encoder | 155 |
| MSMJ022G1C | MSMJ 200 W Incremental encoder | 155 |
| MSMJ022G1D | MSMJ 200 W Incremental encoder | 155 |
| MSMJ022G1S | MSMJ 200 W Incremental encoder | 155 |
| MSMJ022G1T | MSMJ 200 W Incremental encoder | 155 |
| MSMJ022G1U | MSMJ 200 W Incremental encoder | 155 |
| MSMJ022G1V | MSMJ 200 W Incremental encoder | 155 |
| MSMJ022S1A | MSMJ 200 W Absolute encoder | 155 |
| MSMJ022S1B | MSMJ 200 W Absolute encoder | 155 |
| MSMJ022S1C | MSMJ 200 W Absolute encoder | 155 |
| MSMJ022S1D | MSMJ 200 W Absolute encoder | 155 |
| MSMJ022S1S | MSMJ 200 W Absolute encoder | 155 |
| MSMJ022S1T | MSMJ 200 W Absolute encoder | 155 |
| MSMJ022S1U | MSMJ 200 W Absolute encoder | 155 |
| MSMJ022S1V | MSMJ 200 W Absolute encoder | 155 |
| MSMJ042G1A | MSMJ 400 W Incremental encoder | 156 |
| MSMJ042G1B | MSMJ 400 W Incremental encoder | 156 |
| MSMJ042G1C | MSMJ 400 W Incremental encoder | 156 |
| MSMJ042G1D | MSMJ 400 W Incremental encoder | 156 |
| MSMJ042G1S | MSMJ 400 W Incremental encoder | 156 |
| MSMJ042G1T | MSMJ 400 W Incremental encoder | 156 |
| MSMJ042G1U | MSMJ 400 W Incremental encoder | 156 |
| MSMJ042G1V | MSMJ 400 W Incremental encoder | 156 |
| MSMJ042S1A | MSMJ 400 W Absolute encoder | 156 |
| MSMJ042S1B | MSMJ 400 W Absolute encoder | 156 |
| MSMJ042S1C | MSMJ 400 W Absolute encoder | 156 |
| MSMJ042S1D | MSMJ 400 W Absolute encoder | 156 |
| MSMJ042S1S | MSMJ 400 W Absolute encoder | 156 |
| MSMJ042S1T | MSMJ 400 W Absolute encoder | 156 |
| MSMJ042S1U | MSMJ 400 W Absolute encoder | 156 |
| MSMJ042S1V | MSMJ 400 W Absolute encoder | 156 |
| MSMJ082G1A | MSMJ 750 W Incremental encoder | 157 |
| MSMJ082G1B | MSMJ 750 W Incremental encoder | 157 |
| MSMJ082G1C | MSMJ 750 W Incremental encoder | 157 |
| MSMJ082G1D | MSMJ 750 W Incremental encoder | 157 |
| MSMJ082G1S | MSMJ 750 W Incremental encoder | 157 |
| MSMJ082G1T | MSMJ 750 W Incremental encoder | 157 |
| MSMJ082G1U | MSMJ 750 W Incremental encoder | 157 |
| MSMJ082G1V | MSMJ 750 W Incremental encoder | 157 |
| MSMJ082S1A | MSMJ 750 W Absolute encoder | 157 |
| MSMJ082S1B | MSMJ 750 W Absolute encoder | 157 |
| MSMJ082S1C | MSMJ 750 W Absolute encoder | 157 |
| MSMJ082S1D | MSMJ 750 W Absolute encoder | 157 |
| MSMJ082S1S | MSMJ 750 W Absolute encoder | 157 |
| MSMJ082S1T | MSMJ 750 W Absolute encoder | 157 |
| MSMJ082S1U | MSMJ 750 W Absolute encoder | 157 |
| MSMJ082S1V | MSMJ 750 W Absolute encoder | 157 |

**MUMA (Low inertia)**

| Part No. | Title | Page |
|---|---|---|
| MUMA011P1S | MUMA 100 W Incremental encoder | 227,231 |
| MUMA011P1T | MUMA 100 W Incremental encoder | 227,231 |

**MUMA (Low inertia)**

| Part No. | Title | Page |
|---|---|---|
| MUMA012P1S | MUMA 100 W Incremental encoder | 229,231 |
| MUMA012P1T | MUMA 100 W Incremental encoder | 229,231 |
| MUMA021P1S | MUMA 200 W Incremental encoder | 227,231 |
| MUMA021P1T | MUMA 200 W Incremental encoder | 227,231 |
| MUMA022P1S | MUMA 200 W Incremental encoder | 229,231 |
| MUMA022P1T | MUMA 200 W Incremental encoder | 229,231 |
| MUMA042P1S | MUMA 400 W Incremental encoder | 229,231 |
| MUMA042P1T | MUMA 400 W Incremental encoder | 229,231 |
| MUMA5AZP1S | MUMA 50 W Incremental encoder | 227,229,231 |
| MUMA5AZP1T | MUMA 50 W Incremental encoder | 227,229,231 |

**MUMA with Gear Reducer (Low inertia)**

| Part No. | Title | Page |
|---|---|---|
| MUMA011P31N | MUMA with reduction gear 100 W Incremental encoder | 232,235 |
| MUMA011P32N | MUMA with reduction gear 100 W Incremental encoder | 232,235 |
| MUMA011P34N | MUMA with reduction gear 100 W Incremental encoder | 232,235 |
| MUMA011P41N | MUMA with reduction gear 100 W Incremental encoder | 232,235 |
| MUMA011P42N | MUMA with reduction gear 100 W Incremental encoder | 232,235 |
| MUMA011P44N | MUMA with reduction gear 100 W Incremental encoder | 232,235 |
| MUMA012P31N | MUMA with reduction gear 100 W Incremental encoder | 232,235 |
| MUMA012P32N | MUMA with reduction gear 100 W Incremental encoder | 232,235 |
| MUMA012P34N | MUMA with reduction gear 100 W Incremental encoder | 232,235 |
| MUMA012P41N | MUMA with reduction gear 100 W Incremental encoder | 232,235 |
| MUMA012P42N | MUMA with reduction gear 100 W Incremental encoder | 232,235 |
| MUMA012P44N | MUMA with reduction gear 100 W Incremental encoder | 232,235 |
| MUMA021P31N | MUMA with reduction gear 200 W Incremental encoder | 232,235 |
| MUMA021P32N | MUMA with reduction gear 200 W Incremental encoder | 232,235 |
| MUMA021P34N | MUMA with reduction gear 200 W Incremental encoder | 232,235 |
| MUMA021P41N | MUMA with reduction gear 200 W Incremental encoder | 232,235 |
| MUMA021P42N | MUMA with reduction gear 200 W Incremental encoder | 232,235 |
| MUMA021P44N | MUMA with reduction gear 200 W Incremental encoder | 232,235 |
| MUMA022P31N | MUMA with reduction gear 200 W Incremental encoder | 232,235 |
| MUMA022P32N | MUMA with reduction gear 200 W Incremental encoder | 232,235 |
| MUMA022P34N | MUMA with reduction gear 200 W Incremental encoder | 232,235 |
| MUMA022P41N | MUMA with reduction gear 200 W Incremental encoder | 232,235 |
| MUMA022P42N | MUMA with reduction gear 200 W Incremental encoder | 232,235 |
| MUMA022P44N | MUMA with reduction gear 200 W Incremental encoder | 232,235 |
| MUMA042P31N | MUMA with reduction gear 400 W Incremental encoder | 232,235 |
| MUMA042P32N | MUMA with reduction gear 400 W Incremental encoder | 232,235 |
| MUMA042P34N | MUMA with reduction gear 400 W Incremental encoder | 232,235 |
| MUMA042P41N | MUMA with reduction gear 400 W Incremental encoder | 232,235 |
| MUMA042P42N | MUMA with reduction gear 400 W Incremental encoder | 232,235 |
| MUMA042P44N | MUMA with reduction gear 400 W Incremental encoder | 232,235 |

MEMO





## [Panasonic Sales Office of Motors]

(February.01.2016)

| Country | Company Name [Category] | City | Address | TEL / FAX |
|---|---|---|---|---|
| U.S.A | Panasonic Industrial Devices Sales Company of America [Sales office] | New Jersey | Two Riverfront Plaza, 7th Floor Newark, NJ 07102-5490 U.S.A | TEL: +1-800-228-2350 |
| | | | | FAX: — |
| Brazil | Panasonic do Brazil [Sales office] | Sao Paulo | Avenida do Cafe, 277 Torre A-8 Andar Jabaquara ZIP Code: 04311-900 Sao Paulo SP Brazil | TEL: +55-11-3889-4022 |
| | | | | FAX: +55-11-3889-4103 |
| Germany | Panasonic Industrial Devices Sales Europe GmbH [Sales office] [European Headquarter] | Munich | Hans-Pinsel-Strasse 2 · D - 85540 Haar · Germany | TEL: +49-89-46-159-0 |
| | | | | FAX: +49-89-46-159-212 |
| | | | e-mail | http://eu.industrial.panasonic.com/about-us/contact-us |
| | | | Web site | http://eu.industrial.panasonic.com/products/motors-compressors-pumps |
| | ghv Vertriebs-GmbH [Distributors] | Munich | Am Schammacher Feld 47 D-85567 Grafing b. Munich | TEL: +49(0)-80-92/81-89-0 |
| | | | | FAX: +49(0)-80-92/81-89-99 |
| | | | e-mail | http://www.ghv.de/kontakt.html |
| | Panasonic Electric Works Europe AG [Sales office] [European Headquarter] | Holzkirchen | Rudolf-Diesel-Ring 2, 83607 Holzkirchen, Deutschland | TEL: +49 (0) 8024 648-0 |
| | | | | FAX: +49 (0) 8024 648-111 |
| | | | e-mail | https://www.panasonic-electric-works.com/eu/93.htm |
| | | | Web site | https://www.panasonic-electric-works.com/eu/index.htm |
| | Panasonic Electric Works Europe AG [Subsidiary] | Holzkirchen | Rudolf-Diesel-Ring 2, 83607 Holzkirchen, Deutschland | TEL: +49 (0) 8024 648-0 |
| | | | | FAX: +49 (0) 8024 648-111 |
| | | | e-mail | https://www.panasonic-electric-works.com/eu/93.htm |
| | | | Web site | https://www.panasonic-electric-works.com/eu/index.htm |
| France | Panasonic Electric Works Sales Western Europe B.V. [Sales office] | Verrières-Le-Buisson | 10, rue des petits ruisseaux, 91370 Verrières-Le-Buisson, France | TEL: +33(0)160135757 |
| | | | | FAX: +31(0)160135758 |
| | | | e-mail | https://www.panasonic-electric-works.com/eu/93.htm |
| | | | Web site | https://www.panasonic-electric-works.com/eu/index.htm |
| Italy | Panasonic Electric Works Italia srl [Subsidiary] | Verona | Via del Commercio 3-5 (Z.I.Ferlina), 37012 Bussolengo (VR), Italy | TEL: +39-045-6752711 |
| | | | | FAX: +39-045-6700444 |
| | | | e-mail | https://www.panasonic-electric-works.com/eu/93.htm |
| | | | Web site | https://www.panasonic-electric-works.com/eu/322.htm |
| | Lenze Italia S.r.l. [Distributors] | Milano | Viale Monza 338 20128 Milano | TEL: +39-02-270-98-1 |
| | | | | FAX: +39-02-270-98-290 |
| | | | e-mail | mail@LenzeItalia.it |
| | | | Web site | http://www.lenze.com/it-it/azienda/lenze-in-italia/ |
| United Kingdom | Panasonic Electric Works UK Ltd. [Sales office] | Milton Keynes | Sunrise Parkway, Linford Wood Milton Keynes, MK14 6LF United Kingdom | TEL: +44(0)1908231599 |
| | | | | FAX: +44(0)1908231555 |
| | | | e-mail | https://www.panasonic-electric-works.com/eu/93.htm |
| | | | Web site | https://www.panasonic-electric-works.com/eu/index.htm |
| | Lenze Limited [Distributors] | Bedford | Priory Business Park, Bedford, MK44 3WH. | TEL: +44-1234-7532-00 |
| | | | | FAX: +44-1234-7532-20 |
| | | | e-mail | uk.sales@lenze.com |
| | | | Web site | http://www.lenze.com/en-gb/about-lenze/lenze-in-united-kingdom/ |
| Austria | Panasonic Electric Works Austria GmbH [Sales office] | Biedermannsdorf | Josef Madersperger Strasse 2, 2362 Biedermannsdorf (Vienna), Austria | TEL: +43(0)2236-26846 |
| | | | | FAX: +43(0)2236-46133 |
| | | | e-mail | https://www.panasonic-electric-works.com/eu/93.htm |
| | | | Web site | https://www.panasonic-electric-works.com/eu/index.htm |
| Polska | Panasonic Electric Works Polska sp. z.o.o. [Sales office] | Warszawa | ul. Wołoska 9a, 02-583 Warszawa | TEL: +48(0)22338-11-33 |
| | | | | FAX: +48(0)22213-95-01 |
| | | | e-mail | https://www.panasonic-electric-works.com/eu/93.htm |
| | | | Web site | https://www.panasonic-electric-works.com/eu/index.htm |
| Nederland | Panasonic Electric Works Sales Western Europe B.V. [Sales office] | PJ Best | De Rijn 4 (Postbus 211), 5684 PJ Best, Nederland | TEL: +31(0)499372727 |
| | | | | FAX: +31(0)499372185 |
| | | | e-mail | https://www.panasonic-electric-works.com/eu/93.htm |
| | | | Web site | https://www.panasonic-electric-works.com/eu/index.htm |

| Country | Company Name [Category] | City | Address | TEL / FAX |
|---|---|---|---|---|
| Czech Republic | Panasonic Electric Works Czech s.r.o. [Sales office] | Brno | Veveří 3163/111, 616 00 Brno, Czech | TEL +420(0)541217001 |
| | | | | FAX +420(0)541217101 |
| | | | e-mail | https://www.panasonic-electric-works.com/eu/93.htm |
| | | | Web site | https://www.panasonic-electric-works.com/eu/index.htm |
| Spain | Panasonic Electric Works Espana S.A. [Subsidiary] | Madrid | Barajas Park, San Severo 20, 28042 Madrid, Spain | TEL +34-91-329-3875 |
| | | | | FAX +34-91-329-2976 |
| | | | e-mail | https://www.panasonic-electric-works.com/eu/93.htm |
| | | | Web site | https://www.panasonic-electric-works.com/eu/322.htm |
| Romania | C.I.T. Automatizari SRL [Distributors] | Bucuresti | sos. Bucuresti, nr.63, Ciorogirla, Ilfov, RO-077055, ROMANIA | TEL +40-21-255-0543 |
| | | | | FAX +40-21-255-0544 |
| | | | e-mail | office@citautomatizari.ro |
| | | | Web site | http://www.citautomatizari.ro |
| Hungary | Panasonic Electric Works Hungary [Sales office] | Budapest | Neumann J. u. 1., 1117 Budapest, Hungary | TEL +36(0)19998926 |
| | | | | FAX +36(0)19998927 |
| | | | e-mail | https://www.panasonic-electric-works.com/eu/93.htm |
| | | | Web site | https://www.panasonic-electric-works.com/eu/index.htm |
| Switzerland | Panasonic Electric Works Schweiz AG [Sales office] | Rotkreuz | Grundstrasse 8, 6343 Rotkreuz, Schwitzerland | TEL +33(0)417997050 |
| | | | | FAX +31(0)417997055 |
| | | | e-mail | https://www.panasonic-electric-works.com/eu/93.htm |
| | | | Web site | https://www.panasonic-electric-works.com/eu/index.htm |
| Russia | Electroprivod Ltd. [Distributors] | St.Petersburg | Office 417, litera 43, Polustrovskiy avenue, Saint-Petersburg, Russia | TEL +7-812-703-09-81 |
| | | | | FAX +7-812-493-27-26 |
| | | | Web site | http://www.electroprivod.ru |
| Turkey | BOSTEK TEKNOLOJI GELISTIRME VE ROBOT SIST.SAN.TIC.A.S [Distributors] | Izmir | 10042 SOK.NO:10 A.O.S.B CIGLI-IZMIR, TURKEY | TEL +90 232 433 8515 |
| | | | | FAX +90 232 433 8881 |
| | | | e-mail | sales@bostek.com.tr |
| | | | Web site | http://www.bostek.com.tr/ |
| | Savior Kontrol Otomasyon [Distributors] | Istanbul | Des Sanayi Sitesi 104 Sokak A07 Blok No:02 Yukarı Dudullu Ümraniye İstanbul Turkey | TEL +90-216-466-3683 |
| | | | | FAX +90-216-466-3685 |
| | | | e-mail | info@savior.com.tr |
| | | | Web site | http://www.savior.com.tr/ |
| China | Panasonic Industrial Devices Sales (Hong Kong) Co.,Ltd. (PIDSHK) [Sales office] | Hong kong | Top Floor, South Wing, ChinaChem Gloden Plaza, 77 Mody Road, S.T.S. East, Kowloon, HongKong | TEL +852-2529-7322 |
| | | | | FAX +852-2598-9743 |
| | Panasonic Industrial Devices Sales (China) Co.,Ltd. (PIDSCN) [Sales office] | Shanghai | Floor 6, China Insurance Building, 166 East Road LuJiaZui PuDong New District, Shanghai, China | TEL +86-21-3855-2442 |
| | | | | FAX +86-21-3855-2375 |
| | Panasonic Industrial Devices Sales (China) Co.,Ltd. (PIDSCN) [Sales office] | Shenzhen | 8/F, Tower Three, Kerry Plaza, 1-1 Zhongxinsi Road, Futian District, Shenzhen, China | TEL +86-755-8255-8791 |
| | | | | FAX — |
| India | Industrial Division, Panasonic India Pvt Ltd. [Sales office] | Gurgaon, Haryana | 12th Floor, Ambience Commercial, Behind Ambience Mall, Gurgaon - 122002, Haryana, India | TEL +91-124-6670400 |
| | | | | FAX +91-124-6670338 |
| | | | Web site | http://industrial.panasonic.com/sa/products/motors-compressors/fa-motors |
| | Lubi Electronics [Distributors] | Gandhinaga, Gujarat | Sardar Patel Ring Road, Near Bright School, Nana Chiloda, Dist.: Gandhinagar - 382330, Gujarat, India | TEL +91-79-39845300 |
| | | | | FAX +91-79-39845599 |
| | | | Web site | http://www.lubielectronics.com |
| | Luna Bearings [Distributors] | Mumbai, Maharashtra | 59, Bibijan Street, 2nd Floor, Moiz Manzil, Mumbai - 400003, Maharashtra, India | TEL +91-22-23455052 |
| | | | | FAX +91-22-23427773 |
| | | | Web site | http://www.lunabearings.com |
| | Vashi Electricals Pvt. Ltd. [Distributors] | Mumbai, Maharashtra | A/6, Plot No.74, Shree Ganesh Complex, Behind Gupta Compound, Dapole Road, Mankoli Naka, Bhiwandi - 421305, Maharashtra, India | TEL +91-2522-661600 |
| | | | | FAX +91-2522-661620 |
| | | | Web site | http://www.vashielectricals.com |



| Country | | Company Name [Category] | City | Address | TEL / FAX |
|---|---|---|---|---|---|
| Korea | | Panasonic Industrial Devices Sales Korea Co., Ltd. (PIDSKR) [Sales office] | Seoul | 6F DONG-IL Tower 38, Teheran-ro 114-gil, Gangnam-gu, Seoul, 135-851, Korea | TEL +82-2-795-9600 |
| | | | | | FAX +82-2-2052-1053 |
| Taiwan | | Panasonic Industrial Devices Sales Taiwan Co.,Ltd. [Sales office] | Taipei | 12F, No.9, SongGao Rd., Taipei 110, Taiwan, R.O.C. | TEL +886-2-2757-1900 |
| | | | | | FAX +886-2-2757-1977 |
| South-eastern Asia | | Panasonic Industrial Devices Sales Asia Pte.Ltd. [Sales office] | Singapore | No.3 Bedok South Road Singapore 469269 | TEL +65-6390-3718 |
| | | | | | FAX +65-9435-6844 |
| | Singapore | Intermech Machinery Pte.Ltd. [Distributors] | Singapore | 2 Woodlands Sector 1 #03-25, Woodlands Spectrum 1 Singapore 738068 | TEL +65-6751-5088 |
| | | | | | FAX +65-6759-2122 |
| | | | | Web site | http://www.intermech.com.sg |
| | Malaysia | Panamech Machinery Sdn Bhd [Distributors] | Kuala Lumpur | No.14, Lorong Sanggul 1C, Bandar Puteri, 41200 Klang, Selangor Darul Ehsan | TEL +60-3-5161-7876 |
| | | | | | FAX +60-3-5161-7136 |
| | | | | Web site | http://panamech.com.my/ |
| | | Panamech (PG) Sdn Bhd [Distributors] | Penang | Sri Relau Komplex, Unit 1-3-11, Persiaran Bukit Jambul 1, 11900 Penang | TEL +60-4-643-8266 |
| | | | | | FAX +60-4-645-1639 |
| | | | | Web site | http://panamech.com.my/ |
| | Thailand | Premier Automation Center Co.,Ltd. [Distributors] | Bangkok | 73 Soi Ladkrabang 30 Ladkrabang Ladkrabang Bangkok 10520 | TEL +66-2181-2299 |
| | | | | | FAX +66-2181-2288 |
| | | | | Web site | http://www.premier-ac.co.th |
| | | Plenty Island (Thai) Co.,Ltd. [Distributors] | Bangkok | 3 Soi Charoenrat 10, Charoenrat Road., Bangkhlo, Bangkhorlaem, Bangkok 10120 | TEL +66-2291-9933 |
| | | | | | FAX +66-2291-2065 |
| | | | | Web site | http://www.plenty.co.th |
| | Indonesia | PT. Handal Yesindo Sejahtera [Distributors] | Surabaya | Jl. Raya Kutisari 8A, Surabaya, Indonesia | TEL +62-31-843-8844 |
| | | | | | FAX +62-31-841-4333 |
| | | | | Web site | http://www.handalyesindo.com |
| | | PT.Riasarana Electrindo [Distributors] | Jakarta | Jl. Prof. Dr. Latumenten Grogol Permai blok D No. 8-15 Jakarta 11460, Indonesia | TEL +62-21-564-9178 |
| | | | | | FAX +62-21-566-7405 |
| | | | | Web site | http://www.risacorps.com |
| | Philippines | Movaflex Designs Unlimited, Inc. [Distributors] | Manila | 136 Calbayog Street, Mandaluyong City, Metro Manila, Philippines. | TEL +63-2-881-3636 |
| | | | | | FAX +63-2-998-3881 |
| | | | | Web site | http://www.movaflex.com/ |

## Looking for pricing, stock, or lifecycle information?

Click below to explore more details on WIN SOURCE:

- View MFMCA0050AEB on WIN SOURCE
- Panasonic Information

## Optimize Your Supply Chain with WIN SOURCE Solutions

- Global Sourcing Solution
- Obsolete Management
- Cost Control Management
- Shortage Management
- Alternative Solution
- Excess Inventory Management