THE DATASHEET OF

61125-050CALF

www.win-source.net 0086-755-83957316

PRODUCT NO.	DIM.M
61125-005CA/005CALF	10.0
61125-025CA/025CALF	6.55
61125-045CA/045CALF	6.55
61125-055CA/055CALF	6.55
61125-025CAC/025CACLF	6.55
61125-045CAC/045CACLF	6.55
61125-055CAC/055CACLF	6.55

PRODUCT NO.	DIM.M
61125-020CA/020CALF	-0.3
61125-220CA/220CALF	2.15
61125-040CA/040CALF	-0.3
61125-050CA/050CALF	-0.3
61125-050CAN/050CANLF	-0.3
61125-020CAC/020CACLF	-0.3
61125-040CAC/040CACLF	-0.3
61125-050CAC/050CACLF	-0.3

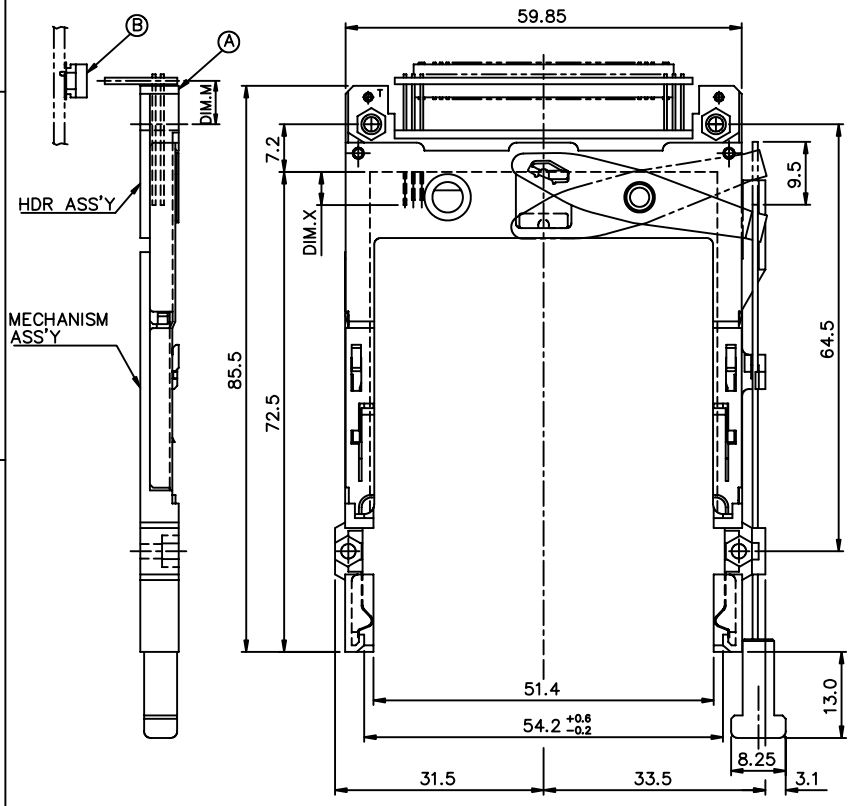

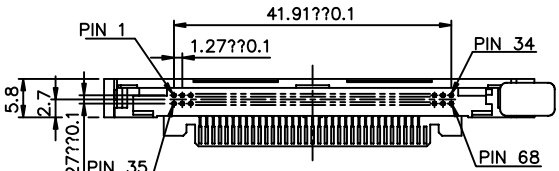

ABOVE P.C.B.
RIGHT PUSH ROD
(CAN'T BE USED FOR SINGLE DECK)

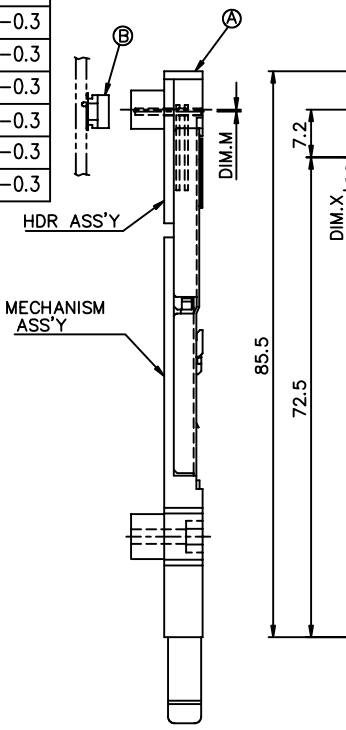

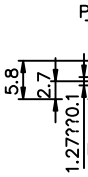

mat'l code				tole other	
rev.	ecn no.	dr	date		
J	N05-0063	W B	03/04/05	linea	
K	N05-0140	W B	05/31/05		
D	T10132	W L	05/11/01	angle	
E	T10162	W L	06/14/01	dr	W
F	T20036	W L	01/30/02	engr	JC
G	T20234	W L	07/25/02	chr	JC
H	T03-0216	W L	06/09/03	appd	J
sheet	revision	K	J	J	J
index	sheet	1	2	3	4

PDM: Rev:K

Tous droits strictement reserves. Reproduction ou communication a des tiers int sous quelque forme que ce soit sans autorisation ecrite du propietaire. propriete de c BERG ELECTRONICS. Droits de reproduction BERG ELECTRONICS bv

All rights strictly reserved. Reproduction or issue to third parties in any for whatever is not permitted without written authority from the proprietor. Property of c BERG ELECTRONICS. Copyright BERG ELECTRONICS bv

PRODUCT NO.	DIM.M
61125–105CA/105CALF	10.0
61125–125CA/125CALF	6.55
61125–145CA/145CALF	6.55
61125–155CA/155CALF	6.55

PRODUCT NO.	DIM.M
61125–120CA/120CALF	–0.3
61125–140CA/140CALF	–0.3
61125–150CA/150CALF	–0.3

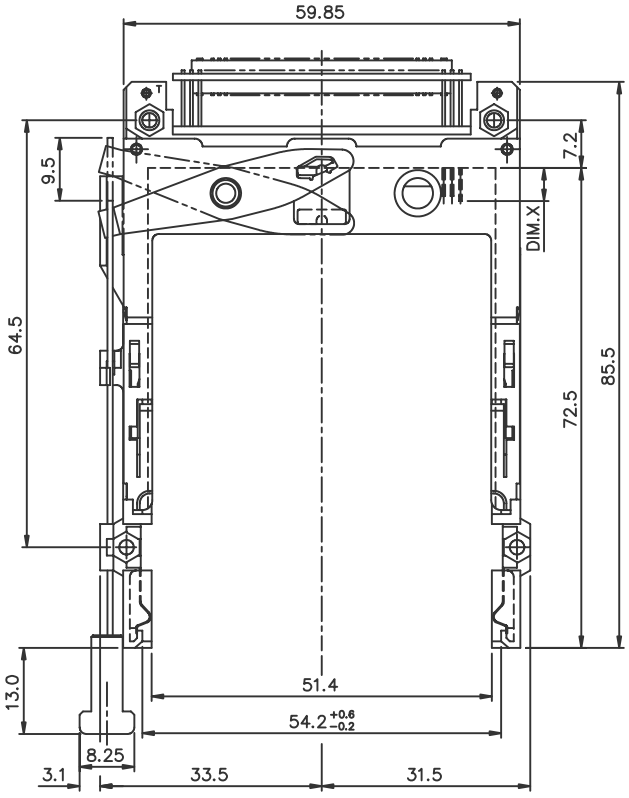

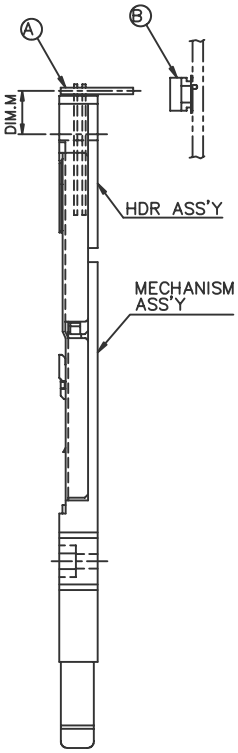

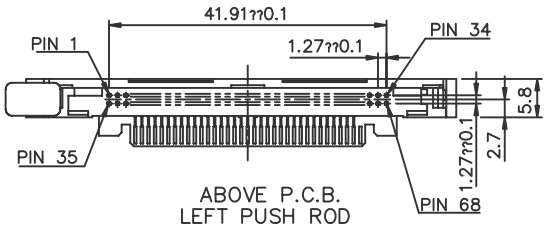

ABOVE P.C.B.
LEFT PUSH ROD
(CAN'T BE USED FOR SINGLE DECK)

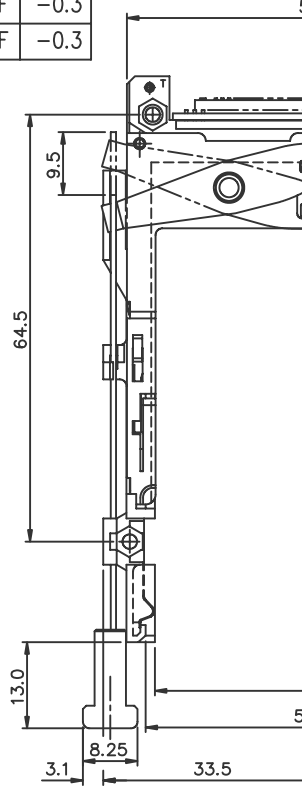

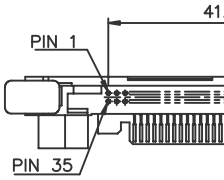

ABO
LEFT
(CAN BE USED

mat'l code				tole other
rev.	ecn no.	dr	date	linea
J				
				angle
				dr w
				engr JC
				chr JC
				appd J
sheet	revision			
index	sheet			

Tous droits strictement reserves. Reproduction ou communication a des tiers int sous quelque forme que ce soit sans autorisation ecrite du propietaire. propriete de c BERG ELECTRONICS. Droits de reproduction BERG ELECTRONICS bv

All rights strictly reserved. Reproduction or issue to third parties in any for whatever is not permitted without written authority from the proprietor. Property of c BERG ELECTRONICS. Copyright BERG ELECTRONICS bv

PDM: Rev:K

PRODUCT NO.	DIM.M
61125-605CA/650CALF	10.0
61125-625CA/625CALF	6.55
61125-645CA/645CALF	6.55
61125-655CA/655CALF	6.55

PRODUCT NO.	DIM.M
61125-620CA/620CALF	-0.3
61125-640CA/640CALF	-0.3
61125-650CA/650CALF	-0.3

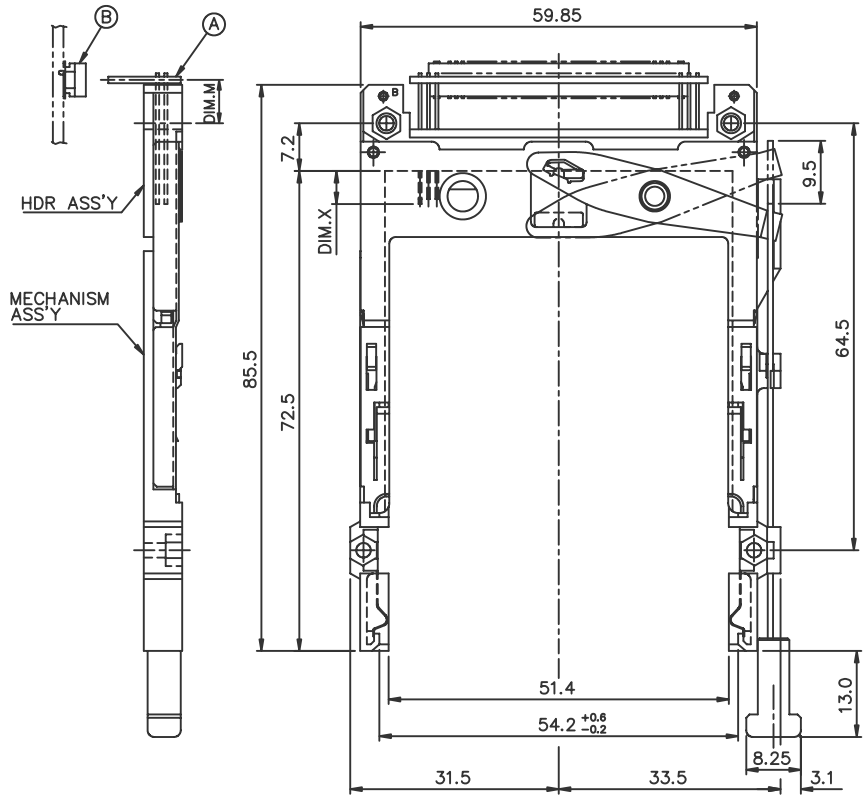

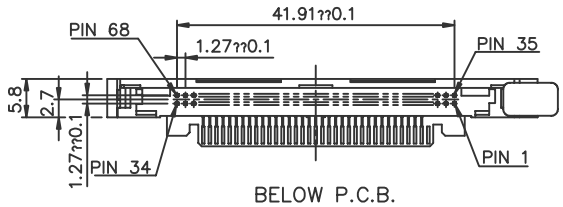

BELOW P.C.B.
LEFT PUSH ROD
(CAN'T BE USED FOR SINGLE DECK)

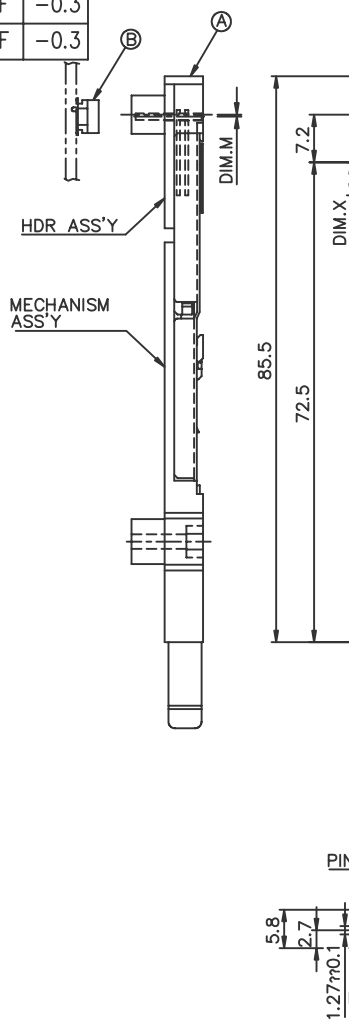

mat'l code				tole other
rev.	ecn no.	dr	date	linea
J				
				angle
				dr w
				engr JC
				chr JC
				appd J
sheet	revision			
index	sheet			

Tous droits strictement reserves. Reproduction ou communication a des tiers int sous quelque forme que ce soit sans autorisation ecrite du propietaire. propriete de c BERG ELECTRONICS. Droits de reproduction BERG ELECTRONICS bv

All rights strictly reserved. Reproduction or issue to third parties in any for whatever is not permitted without written authority from the proprietor. Property of c BERG ELECTRONICS. Copyright BERG ELECTRONICS bv

PDM: Rev:K

PRODUCT NO.	DIM.M
61125-505CA/505CALF	10.0
61125-525CA/525CALF	6.55
61125-545CA/545CALF	6.55
61125-555CA/555CALF	6.55

PRODUCT NO.	DIM.M	DIM.S
61125-520CA/520CALF	-0.3	13.0
61125-540CA/540CALF	-0.3	
61125-550CA/550CALF	-0.3	
61125-520DA/520DALF	-0.3	15.6
61125-520FA/520FALF	-0.3	21.0

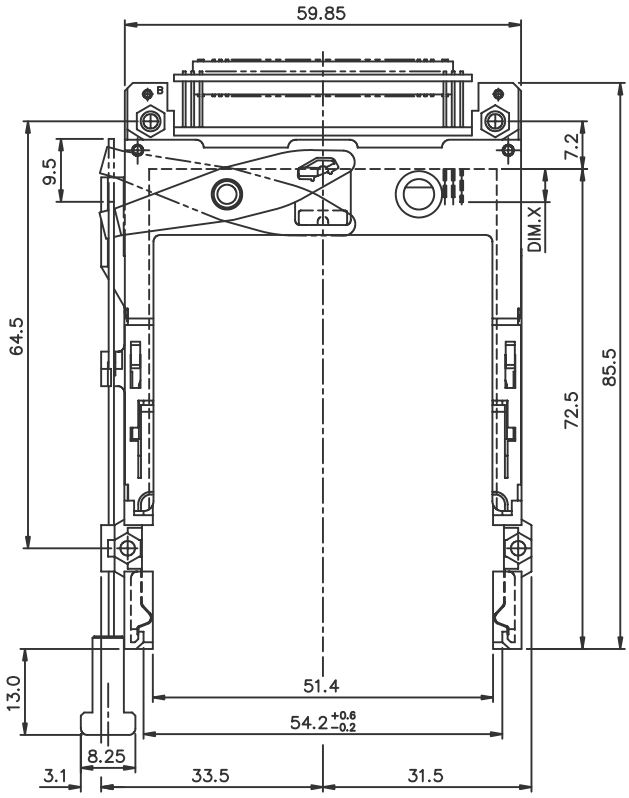

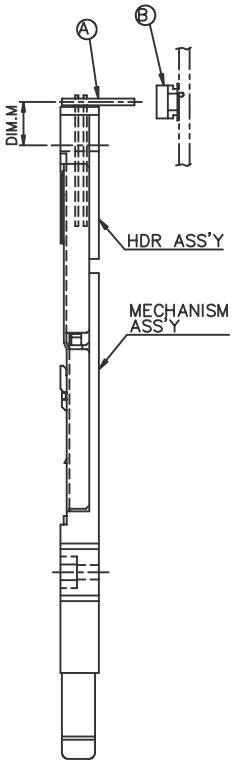

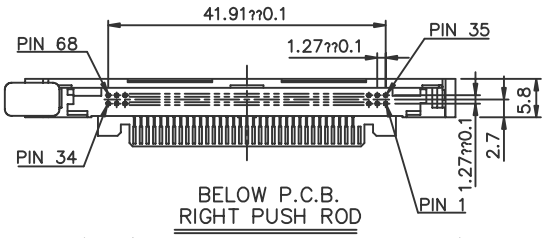

BELOW P.C.B.
RIGHT PUSH ROD
(CAN'T BE USED FOR SINGLE DECK)

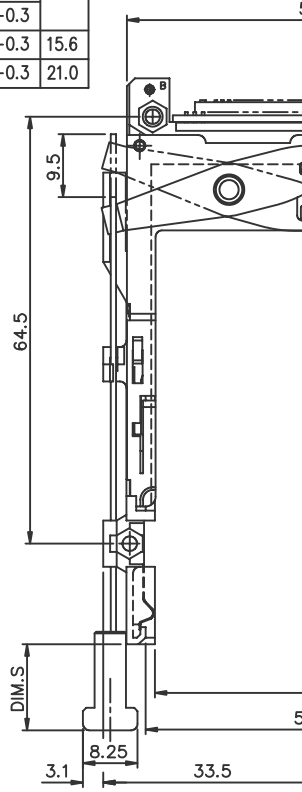

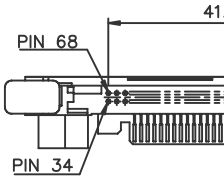

BELO
RIGHT
(CAN BE USED

mat'l code				tole other
rev.	ecn no.	dr	date	linea
J				
				angle
				dr
				engr
				chr
				appd
sheet	revision			
index	sheet			

PDM: Rev:K

Tous droits strictement reserves. Reproduction ou communication a des tiers int sous quelque forme que ce soit sans autorisation ecrite du propietaire. propriete de c BERG ELECTRONICS; Droits de reproduction BERG ELECTRONICS bv

All rights strictly reserved. Reproduction or issue to third parties in any for whatever is not permitted without written authority from the proprietor. Property of c BERG ELECTRONICS. Copyright BERG ELECTRONICS bv

DESCRIPTION : ABOVE PCB, DECK AND PUSH ROD LOCATION ARE AS VIEW BY USER.

LOWER DECK						
Ⓐ PRODUCT NO.	STAND-OFF HIGH DIM. L	PUSH ROD LOCATION ③	P.C.B. SIDE ③	P.C.B LAYOUT RECOMMENDED	Ⓑ MATING RECEPTACLE	MOUNT STYLE TO PCB AND PUSH ROD SIDE
61125-020CA/020CALF	2.2	RIGHT	ABOVE	P/N: TA-1056	RECEPTACLE PART NUMBER: 91931-31169 91931-31169LF	
61125-220CA/220CALF	2.2	RIGHT	ABOVE	SEE PAGE 6		
61125-040CA/040CALF	4.3	RIGHT	ABOVE	SEE DRAWING P/N: TA-1056		
61125-050CA/050CALF	5.0					
61125-050CAN/050CANLF	5.0					
61125-020CAC/020CACLF	2.2					
61125-040CAC/040CACLF	4.3					
61125-050CAC/050CACLF	5.0					
61125-120CA/120CALF	2.2	LEFT				
61125-140CA/140CALF	4.3					
61125-150CA/150CALF	5.0					
61125-520CA/520CALF	2.2	RIGHT	BELOW	SEE DRAWING P/N: TA-1056		
61125-520FA/520FALF	2.2					
61125-520DA/520DALF	2.2					
61125-540CA/540CALF	4.3					
61125-550CA/550CALF	5.0					
61125-620CA/620CALF	2.2	LEFT	BELOW	SEE DRAWING P/N: TA-1056		
61125-640CA/640CALF	4.3					
61125-650CA/650CALF	5.0					

UPPER DECK					
Ⓐ PRODUCT NO.	JOINT WITH LOWER DECK STAND-OFF HIGH(DIM. L)	PUSH ROD LOCATION ③	P.C.B. SIDE ③	Ⓑ MATING RECEPTACLE	MOUNT STYLE TO PCB AND PUSH ROD SIDE
61125-005CA/005CALF	0.0	RIGHT	ABOVE	RECEPTACLE PART NUMBER: 91931-31169 91931-31169LF	
61125-025CA/025CALF	2.2				
61125-045CA/045CALF	4.3				
61125-055CA/055CALF	5.0				
61125-025CAC/025CACLF	2.2				
61125-045CAC/045CACLF	4.3				
61125-055CAC/055CACLF	5.0				
61125-105CA/105CALF	0.0	LEFT			
61125-125CA/125CALF	2.2				
61125-145CA/145CALF	4.3				
61125-155CA/155CALF	5.0				
61125-505CA/505CALF	0.0	RIGHT	BELOW		
61125-525CA/525CALF	2.2				
61125-545CA/545CALF	4.3				
61125-555CA/555CALF	5.0				
61125-605CA/605CALF	0.0	LEFT			
61125-625CA/625CALF	2.2				
61125-645CA/645CALF	4.3				
61125-655CA/655CALF	5.0				

NOTES:
1. IT CAN'T BE USED FOR SINGLE DECK.
2. IT MUST BE ASSEMBLED BY USER FOR DOUBLE DECK APPLICATION.(PLEASE REFER TO P/N 61124)

NOTES:
1. 8mm MIN.
2. EJECT TRA
③ PUSH ROD
APPEARS
4. MATERIAL
4.1 HEADE
PLAS
PIN
PCB
4.2 EJECT
PLAS
PLA
EMI
5. FINISH (PI
UNDE
CON
SOLD
SOLD
6. DIM "X"
7. FOR P/N:
a.TIGHTEN
b.LUBRICA
8. IF LEAD FR
260°C PEA
APPLICATIO
9. IF LEAD FR
AND OTHER
10. LEAD FRE
11. PART NUM

N
Ⓐ EJECT
Ⓑ MATING

mat'l code				tole other
rev.	ecn no.	dr	date	linea
K				
				angle
				dr
				engr
				chr
				appd
sheet	revision			
index	sheet			

PDM: Rev:K

Tous droits strictement reserves. Reproduction ou communication a des tiers int sous quelque forme que ce soit sans autorisation ecrite du propietaire. propriete de c BERG ELECTRONICS. Droits de reproduction BERG ELECTRONICS bv

All rights strictly reserved. Reproduction or issue to third parties in any for whatever is not permitted without written authority from the proprietor. Property of c BERG ELECTRONICS. Copyright BERG ELECTRONICS bv

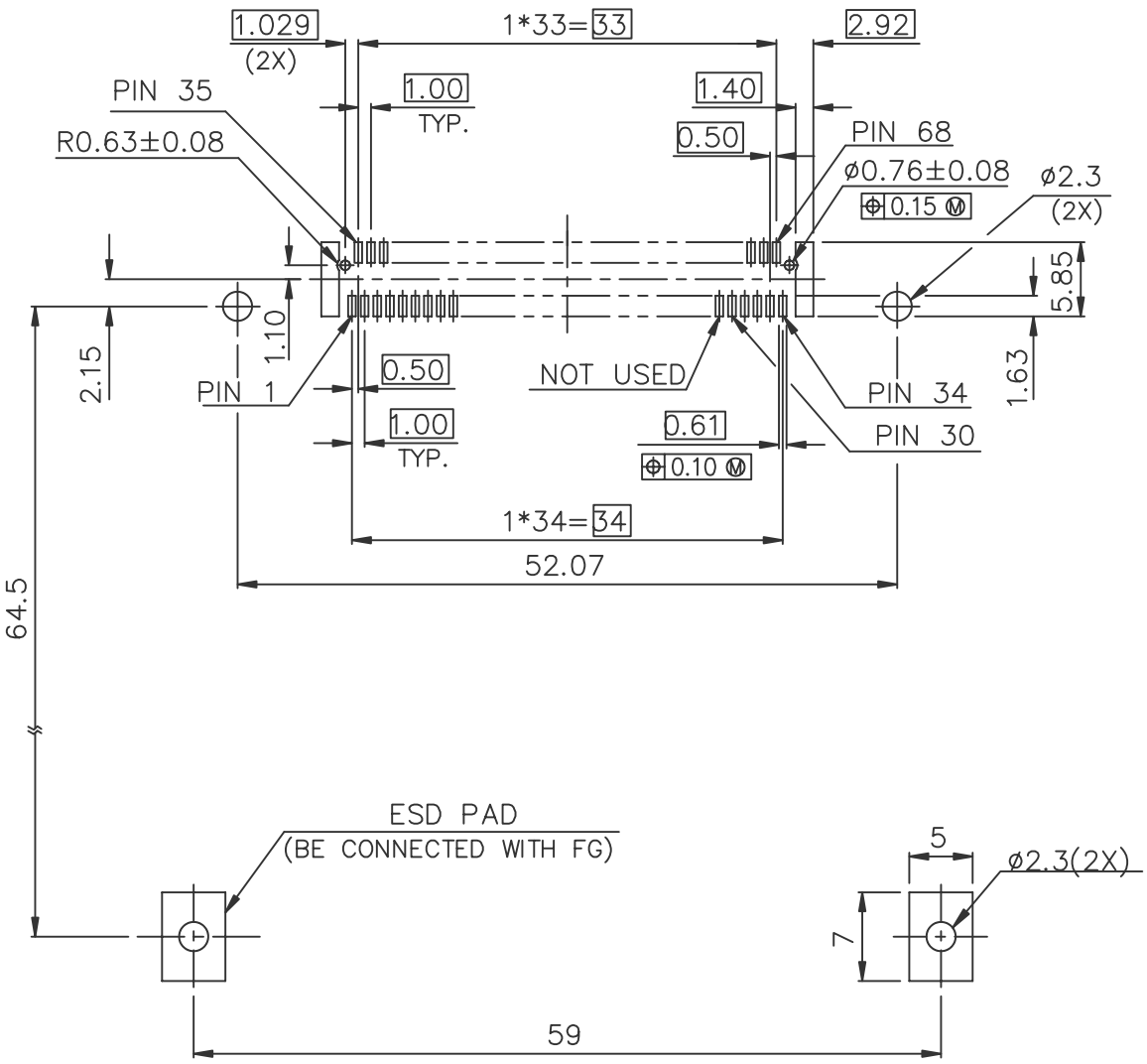

BOARD VIEW FROM CONNECTOR MOUNTED SIDE
TOP OF BOARD IN APPLICATION

FOR 61125-220CA/220CALF ONLY

mat'l code				tole other
rev.	ecn no.	dr	date	linea
J				
				angle
				dr
				engr
				chr
				appd
sheet	revision			
index	sheet			

PDM: Rev:K

Tous droits strictement reserves. Reproduction ou communication a des tiers int sous quelque forme que ce soit sans autorisation ecrite du propietaire. propriete de c BERG ELECTRONICS. Droits de reproduction BERG ELECTRONICS bv

All rights strictly reserved. Reproduction or issue to third parties in any for whatever is not permitted without written authority from the proprietor. Property of c BERG ELECTRONICS. Copyright BERG ELECTRONICS bv

Looking for pricing, stock, or lifecycle information?

Click below to explore more details on WIN SOURCE:

- View 61125-050CALF on WIN SOURCE
- Amphenol FCI Information

Optimize Your Supply Chain with WIN SOURCE Solutions

- Global Sourcing Solution
- Obsolete Management
- Cost Control Management
- Shortage Management
- Alternative Solution
- Excess Inventory Management